TeSys

> Control > Protect > Power > Active

Catalog 2022
Innovative and connected solutions for motor starters



se.com/tesys

Life Is On Schneider Electric

TeSys

Enter in your CATALOGUE

TeSys is an innovative motor control and management solution from the global market leader. TeSys offers connected, efficient products and solutions for switching and protection of motors and electrical loads in compliance with all major global electrical standards.

> ARCHITECTURE of your TeSys catalogue

> PART **A**

ASSEMBLED MOTOR STARTERS
Fully coordinated

A1 — **TeSys** Control
Enclosed switch-disconnectors and motor starters



Enclosed starters

A2 — **TeSys** Control
Open motor starters



Open motor starters

A3 — **TeSys** Control
Hybrid motor starters



Hybrid motor starters

A4 — **TeSys** Control
Ultra motor starters



Ultra motor starters

A5 — Complementary technical information:
coordination and standards

Coordination and standards

TeSys components are classified by function:

> **TeSys** Control
Components for controlling motors

> **TeSys** Protect
Components for protecting motors

> **TeSys** Power
Components for powering motors

> **TeSys** Active
Connected components for motor circuits

> PART B

COMPONENTS for conventional solutions:

TeSys K series
*(ex-**TeSys** K, LRK)*
- 0 to 16 A (AC-3)

TeSys Deca series
*(ex-**TeSys** GV2, GV3, GV4, **TeSys** D, LRD, LR9D)*
- 9 to 150 A (AC-3)

TeSys Giga series
*(ex-**TeSys** GV5, GV6, **TeSys** LRG)*
- 185 to 800 A (AC-3)

B1 **Linergy** BZ, HK Busbar systems — Power busbar systems

B2 GV, LAD, U
Motor starter wiring systems — Wiring systems

B3 **TeSys** Control
Switch-disconnectors — Switch-disconnectors

B4 **TeSys** Power
Fuse carriers — Fuse carriers

B5 **TeSys** Power
Switch-disconnector fuses — Switch-disconnector fuses

B6 **TeSys** Power
Deca, Giga and Modular Motor circuit breakers — Motor circuit breakers

B7 **TeSys** Control
SK, K, Deca Control relays — Control relays

B8 **TeSys** Control
SK, K, SKGC, Deca, Modular and other Contactors — Contactors

B9 **TeSys** Control
Giga High power contactors — High power contactors

B10 **TeSys** Control
F High power contactors — High power contactors

B11 **TeSys** Protect
LRK, Deca, Giga Overload relays — Overload relays

> PART C

COMPONENTS for advanced solutions:

TeSys Ultra series
*(ex-**TeSys** U)*
- 0 to 38 A (AC-3)

TeSys T series
*(ex-**TeSys** T)*
- 0 to 800 A (AC-3)

TeSys island series
*(ex-**TeSys** island)*
- 0 to 80 A (AC-3)

C1 **TeSys** Control
Ultra motor management controller
TeSys Active
T motor management system — Motor management devices

C2 **TeSys** Active
Island motor starters — Control and monitoring island



Start smart. Run smart. With **TeSys** motor controls.

Stay smart with the world's best-selling motor control solutions from the inventor of the world's first contactor - Schneider Electric™.

For almost a century, **TeSys** motor controls have driven the industry with innovations in motor protection, monitoring, and control.

It started with the introduction of the industry's first BAR contactor in 1924, and today, the legacy of innovation is built into every **TeSys** motor control device.

Best-in-class safety and reliability, plug-and-play architecture, and flexible functionality mean **TeSys** motor control solutions can meet your requirements across a wide range of applications, from the most common to the most advanced.

Wherever you are and anywhere your projects come together, you can trust Schneider Electric and **TeSys** contactors, circuit breakers, relays, and switches for unmatched reliability, complete compatibility with international standards, and the robust support of the Schneider Electric global supply network.

Start smart, run smart and stay smart with **TeSys** motor controls.

A Century
OF INNOVATION AND LEADERSHIP

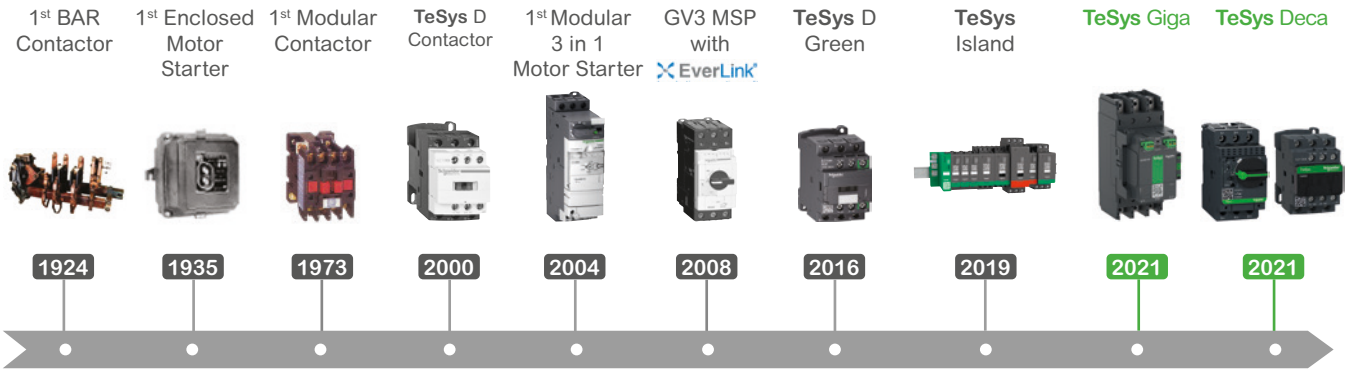

Superior safety for all industries

TeSys motor controls come with all of the isolation, protection and emergency handling you need to comply with international codes. High-contrast covers identify safety-critical devices to prevent inadvertent manual operation. Every **TeSys** contactor is both mechanically linked and equipped with mirror contacts for safety applications and wherever auxiliary contact state reliability is critical.



HVAC

Ensure 24/7 availability of your HVAC system with reliable products that can reach high ambient temperatures without derating.



Conveying

Decentralize the control cabinet of your conveyor line and benefit from up to 80% space reduction.



Genset

Make certain your generator starts even in the harshest conditions with robust **TeSys** solutions.



Pumping

Optimize single or multi-drive boosters for industry or infrastructure with energy and cost-effective solutions.



Packaging

Keep pace with the most demanding, high-end packing applications with solutions that can perform 30 million AC53a electrical cycles, like **TeSys H**.



Oil and Gas

Keep your employees and assets safe and improve uptime in onshore and offshore applications: pipeline operations: LNG and natural gas processing: and refining and petrochemical applications.



Water and Wastewater

Optimize the treatment and delivery of safer water by reducing energy usage and lowering operating costs.



Food and Beverage

Serve your customers with environmentally friendly products to improve sustainability, efficiency, and flexibility, allowing you to adapt to changing customer habits.

Online selection tool

EcoStruxure™ Motor Control Configurator

For Direct-On-Line and Star-Delta starters, motor circuit breakers with advanced protection, motor management relays, configurations for total coordination, drives, and soft starters.

No matter what kind of starting method you need, our online **EcoStruxure™ Motor Control Starter Configurator** will help you to quickly and easily select the optimal combination of components to ensure maximized motor safety, protection, and uptime.

Scan or click on the QR code

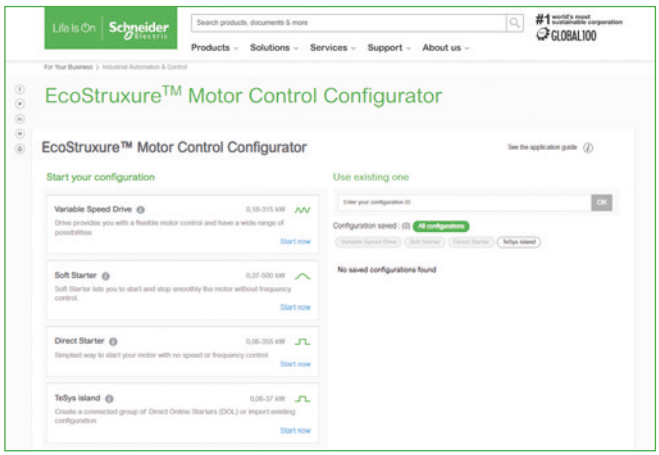

NEWS

EDITO

Welcome to your NEW TeSys catalog!
Your catalog continues to evolve, as it does year after year.

- The first evolution concerns the products, it will bring a Premium design to your control panels thanks to the main TeSys components that now present the same visual homogeneity.
- The structuring of the components naming is the second point of evolution, it answers the need to classify the products by function and by range in the selection tools, the catalog and the Schneider Electric website (www.se.com).
- The last new feature is the presence of a product reference table at the end of the commercial part of each chapter (before the information for designers). It allows you to quickly check the availability of a product variant and access its technical data sheet online.

NEW VISUAL ASPECT

The design of the TeSys core offer is evolving. Circuit breakers, contactors and several other components are now sharing a modern look giving the control panel a new and qualitative visual aspect.
Schneider Electric's identity is fully revealed by the green parts.



NEW TESYS FUNCTION NAMES

TeSys components are grouped by function name, for easier identification.
These functions are related to motor, power, control and protection.

> TeSys Power:
Components for powering motors



> TeSys Control:
Components for controlling motors



> TeSys Protect:
Components for protecting motors



TeSys Active gathers the devices providing built-in communication with motor monitoring and control functions.

> TeSys Active:
Connected components for motor circuits



NEWS

NEW TESYS COMPONENT SERIES NAMES

- Series names group conventional components (circuit breakers, contactors, relays, overcurrent relays) by current rating ranges.
  - 0 to 16 A > **TeSys** K Series
  - 9 to 150 A > **TeSys 'Deca'** Series
  - 115 to 800 A > **TeSys 'Giga'** Series.

- TeSys advanced components have a specific classification.
  - 0 to 38 A All-in-one starters > **TeSys 'Ultra'** Series
  - 0 to 80 A Motor Control/Protection/Monitoring system > **TeSys 'island'** Series.

- Other TeSys component names remain unchanged (TeSys F, TeSys B, TeSys T).

NEW TESYS COMPONENTS FULL NAMES AT A GLANCE

Old names	> NEW names: TeSys Function - Component Series	Complementary indications
TeSys Vario, mini Vario	**TeSys** Control – Switch-disconnectors	
TeSys DF **TeSys** LS **TeSys** GK	**TeSys** Power – Fuse carriers	DF type LS type GK type
TeSys GS	**TeSys** Power – Switch-disconnector fuses	
TeSys GV2 **TeSys** GV3 **TeSys** GV4	**TeSys** Power – **Deca** circuit breakers	Frame 2 Frame 3 Frame 4
TeSys GV5 **TeSys** GV6	**TeSys** Power – **Giga** circuit breakers	Frame 5 Frame 6
TeSys D	**TeSys** Control – **Deca** control relays **TeSys** Control – **Deca** contactors	
TeSys LRD, LR9D	**TeSys** Protect – **Deca** overload relays	
TeSys H	**TeSys** Control – **Hybrid** motor starters	
TeSys U	**TeSys** Control – **Ultra** motor starters	
TeSys island	**TeSys** Active – **island** motor starter	

Part A

ASSEMBLED MOTOR STARTERS

FULLY COORDINATED

TeSys Control
Enclosed switch-disconnectors and motor starters
From 0.25 to 40 kW  A1/1

TeSys Control
Open motor starters
From 0.06 to 315 kW  A2/1

TeSys Control
Hybrid motor starters
Up to 3 kW
From 9 A to 32 A  A3/1

TeSys Control
Ultra motor starters
From 0.09 to 18.5 kW  A4/1

Complementary technical information:
coordination and standards
A5/1

TeSys Control
Enclosed switch-disconnectors and motor starters

Chapter A1

Enclosed switch-disconnectors

Content		Page
Product selector		A1/2
Enclosed switch-disconnectors		A1/3

Enclosed standard starters

Product selector		A1/6
Direct-on-line starters Accessories		A1/7
Reverser starters		A1/13
Star-delta starters		A1/15

Enclosed safety starters

Product selector		A1/17
Safety direct-on-line starters Accessories		A1/18
Safety reverser starters		A1/21

Enclosures and components for customer assemblies

Enclosures (with buttons)		A1/26
Components		A1/30

Technical Data for Designers A1/37

Enclosed Motor Starter Solution Guide

The software to help you to select intuitively your enclosed motor starter solution.

The Enclosed Motor Starter Solution Guide software is available for both PC and iPad.



TeSys Control
Enclosed switch-disconnectors
Introduction & selection table



Range of pre-assembled casings with handle and their rotary switch

They can be fixed on a wall, a panel, or on the chassis of a machine. For simple isolation and/or control of an electrical circuit. Red/yellow handle provides a clear indication of the device safety function (1), while black handle is usually dedicated to ON/OFF control.

(1) Conforming to IEC 60947-3 and IEC 60204.

With numerous advantages to meet OEM's most common needs

- IEC or UL
- Multiple ratings and sizes
- IP65
- Additional poles
- Replaceable switch bodies

Selection in 2 steps

1 Identify your need (1 line one or more) in the **Selection criteria** area (example.: Load 5 kW– Emergency Stop - IEC)

2 Choose your enclosed switch-disconnector in the **Solutions** area, note the radical of the product references

Selection criteria								Solutions				
Ithe (A)	Load power (kW)	Circuit isolation	Emergency stop	IP55	IP65	IEC	UL & CSA					See page
10...140	4...45 (400 V)	●			●	●		VBF				A1/3
10...140	4...45 (400 V)	●	●		●	●			VCF			A1/3
10...32	4...15 (400 V)	●	●	●		●				VCFN		A1/3
32...175 (Ithe IEC) 20...115 (Ith UL)	10...50 HP (480 V)	●	●		●	●	●				VC●GUN	A1/4

PB121471.eps



VCF0GE

PB121220.eps



VCF3GE

PB121472.eps



VCF5GEN

PB121473.eps



VCFN12GE

PB121223.eps



VBF0GE

PB121474.eps



VBF6GEN

Control + Disconnection (IEC)

Enclosed switch-disconnectors, ready to be fixed on workshop wall or directly on the machine and wired to main supply circuit and to load.

Functions / Range / Specificities:
- Direct Control: ON/OFF of 3-phase motor (black handle) or ON/Emergency Stop (red handle)
- 23 IEC motor starters, for 3P motors from 4 to 45 kW (10 to 140 A)
- 6 UL motor starters for 3P motors from 5 to 30 HP (240 V)
- Padlockable handle (1 to 3 padlocks – not included)
- Sealable, lockable cover when handle in position 1 (up to 63 A rating).

Included:
- rotary switch-disconnector body
- handle.

Enclosures for ON / Emergency Stop – IP65 – conforming IEC 60947-3, IEC 60204 (1)

Operator		Ithe	Power AC-23 at 400 V	Incorporated switch body	Possible attachments (2)	With ground plate	Reference (3)	Weight	Overall dimensions (4) WxHxD
Handle	Front plate Dim.								
	mm	A	kW					kg	mm
Red, standard, padlockable with up to 3 padlocks (Ø 4 to Ø 8 shank)	Yellow 60 x 60	10	4	V02	2	No	**VCF02GE**	0.500	90x146x131
						Yes	**VCF02GEGP**	0.560	90x146x131
		16	5.5	V01	2	No	**VCF01GE**	0.500	90x146x131
						Yes	**VCF01GEGP**	0.560	90x146x131
		20	7.5	V0	2	No	**VCF0GE**	0.500	90x146x131
						Yes	**VCF0GEGP**	0.560	90x146x131
		25	11	V1	2	No	**VCF1GE**	0.500	90x146x131
						Yes	**VCF1GEGP**	0.560	90x146x131
		32	15	V2	2	No	**VCF2GE**	0.500	90x146x131
		50	22	V3	3	No	**VCF3GE**	0.930	157x180x152
		63	30	V4	3	No	**VCF4GE**	0.930	157x180x152
Red, long, padlockable with up to 3 padlocks (Ø 4 to Ø 8 shanks)	Yellow 90 x 90	100	37	V5	1	No	**VCF5GEN**	2.190	241x291x190.5
		140	45	V6	1	No	**VCF6GEN**	2.190	241x291x190.5

Protection of sensitive equipment: ground plate available for VCF02GE…VCF1GE – see page A1/5.

Enclosures for ON / Emergency Stop – IP65 - conforming IEC 60947-3 (1)

Operator		Ithe	Power AC-23 at 400 V	Incorporated switch body	Possible attachments (2)	Reference (3)	Weight	Overall dimensions (4) WxHxD
Handle	Front plate Dim.							
	mm	A	kW				kg	mm
Red padlockable, either by 1 (Ø 8 shank) or by 3 padlocks (Ø 6 shank)	Yellow 60 x 60	10	4	VN12	2	**VCFN12GE**	0.422	82.5x131x106
		16	5.5	VN20	2	**VCFN20GE**	0.422	82.5x131x106
		20	7.5	V0	0	**VCFN25GE**	0.512	82.5x131x106
		25	11	V1	0	**VCFN32GE**	0.512	82.5x131x106
		32	15	V2	0	**VCFN40GE**	0.512	82.5x131x106

Enlosures for ON/OF F– IP65 – conforming IEC 60947-3, IEC 60204 (1)

Black, standard, padlockable with up to 3 padlocks (Ø 4 to Ø 8 shank)	Black 60 x 60	10	4	V02	2	**VBF02GE**	0.500	90x146x131
		16	5.5	V01	2	**VBF01GE**	0.500	90x146x131
		20	7.5	V0	2	**VBF0GE**	0.500	90x146x131
		25	11	V1	2	**VBF1GE**	0.500	90x146x131
		32	15	V2	2	**VBF2GE**	0.500	90x146x131
		50	22	V3	3	**VBF3GE**	0.930	157x180x152
		63	30	V4	3	**VBF4GE**	0.930	157x180x152
Black, long, padlockable with up to 3 padlocks (Ø 4 to Ø 8 shank)	Black 90 x 90	100	37	V5	1	**VBF5GEN**	2.190	241x291x190.5
		140	45	V6	1	**VBF6GEN**	2.190	241x291x190.5

(1) For characteristics of switch-disconnectors, please consult your Regional Sales Office.
(2) Number of add-on modules that can be attached.
(3) Enclosure not suitable in atmosphere contaminated with harsh substances (detergents, chlorine solvents, ketones, alcohol, aromatic hydrocarbons).
(4) Dimensions of standard versions, comprising (if any) handle, pushbutton, indicator light.
***Note:** For VCF and VBF enclosures from 02GE to 2GE, only one auxiliary contact block VZ7 or VZ20 can be mounted.*

Dimensions: page A1/38
Schemes: page A1/39

PB107201.eps



VC1GUN

PB107202.eps



VC3GUN

PB121472.eps



VC5GUN

Control + Disconnection (UL)

ON / Emergency Stop – IP65
Conforming UL508 CSA22.2 n° 14, IEC 60947-3, IEC 60204 (1)

Operator		Rating		Standard power ratings of UL motors			Incorporated switch body	Possible attachments	Reference (2)	Weight	Overall dimensions (1) WxHxD
Handle	Front plate Dim.	IEC (Ith)	UL								
			600 V	240 V	480 V	600 V					
	mm	A	A	HP	HP	HP				kg	mm
Red, standard, padlockable with up to 3 padlocks (Ø 4 to Ø 8)	Yellow 60 x 60	32	20	5	10	10	V1	2	**VC1GUN**	0.500	121x164x132.1
		40	25	5	10	15	V2	2	**VC2GUN**	0.500	121x164x132.1
		63	45	10	20	30	V3	2	**VC3GUN**	0.930	164x193x132.1
		80	63	15	30	40	V4	2	**VC4GUN**	0.930	164x193x132.1
Red, long, padlockable with up to 3 padlocks (Ø 4 to Ø 8)	Yellow 90 x 90	125	100	25	50	50	V5	1	**VC5GUN**	2.190	241x291x190.5
		175	115	30	50	60	V6	1	**VC6GUN**	2.190	241x291x190.5

Additional modules for VZ switch bodies

Enclosed switches include a VZ switch body. Additional modules can be plugged on 1 or 2 sides of the switch body to provide additional contacts or extra connectivity.

580589.eps



VZ0
Main pole

580594.eps



VZ11
Neutral pole

580595.eps



VZ15
Earthing terminal

580596.eps



VZ20
Auxiliary contacts

Common modules for enclosed switch disconnectors – with exceptions (3)

Description	Rating	Reference
	A	
Main pole module (mounted in enclosure)	10	**VZ02** (not for VCxGUN starters)
	16	**VZ01** (not for VCxGUN starters)
	20	**VZ0** (not for VCxGUN starters)
	25	**VZ1**
	32	**VZ2**
	50	**VZ3**
	63	**VZ4**
Neutral pole modules with early make and late break contacts	10 to 32	**VZ11**
	50 and 63	**VZ12**
	100 and 140	**VZ13**
Earthing modules	10 to 32	**VZ14**
	50 and 63	**VZ15**
	100 and 140	**VZ16**
Description	**Type of contacts**	**Reference**
Auxiliary contact block modules with 2 auxiliary contacts	N/O + N/C (4)	**VZ7**
	N/O + N/O	**VZ20**

(1) For characteristics of switch-disconnectors, please consult your Regional Sales Office.
(2) Enclosure not suitable in atmosphere contaminated with harsh substances (detergents, chlorine solvents, ketones, alcohol, aromatic hydrocarbons).
(3) Not compatible with V●F5GEN, V●F6GEN, VC5GUN, VC6GUN, VCFN12GE, VCFN20GE.
(4) Late make N/O, early break N/C contacts.

Dimensions:
page A1/40

Schemes:
pages A1/39 and A1/40

Life Is On Schneider Electric



VZN11



VZN14

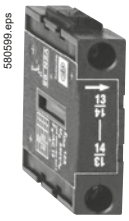

VZN05

Additional modules for switch bodies

Specific modules for VCFN12GE and VCFN20GE

Description	Rating	Reference
	A	
Main pole modules	10	**VZN12**
	16	**VZN20**
Neutral pole module with early make and late break contacts	10 and 16	**VZN11**
Earthing module	10 and 16	**VZN14**

Description	Type of contacts	Reference
Auxiliary contact block modules	1 N/O late make contact	**VZN05**
	1 N/C early break contact	**VZN06**

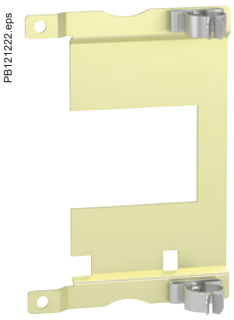

VGP1



VGPCLIP1

Accessories for enclosed switch-disconnectors

Ground plate and accessories for VCF02GE, VCF01GE, VCF0GE, VCF1GE

Metallic ground plate, for shielded cables connection. To be installed between back of enclosed switch-disconnectors, 2 fixing screws. Cable shield grounding ensured by 2 clamps, clamping from Ø11 to 14 mm

For switch body	Reference
Ground plate + 2 clamps + 2 screws	**VGP1**
2 clamps + 2 screws	**VGPCLIP1**

Schemes:
page A1/39

Introduction & selection table

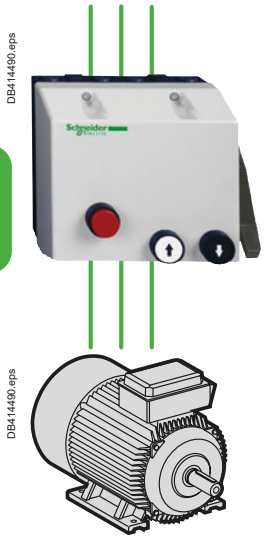

Range of pre-assembled motor starters, with pushbuttons, selectors, protection and control components in a robust casing

They can be fixed on a wall, on a panel, or on the chassis of a machine. They provide an operator with an easy access with visual simplicity

Numerous advantages to meet OEM's most common needs

- IEC
- Multiple ratings and sizes
- IP55, IP65
- IK08, IK09
- Totally or partially pre-wired

Standard starters

They are used to isolate a circuit, to protect and/or to control a motor

Customized protection

Enclosed starter offer is available in fully pre-equipped and pre-wired enclosures, also in partially pre-equipped enclosures to be completed with protective components of the required rating

Accessories

Additional accessories provide reinforced sealing, padlock locking, additional contacts...

Selection in 2 steps

1 Identify your need (1 line one or more) in the **Selection criteria** area (example: Load 5 kW – ON/OFF control with overload protection)

2 Choose your starter in the **Solutions** area by adding column contents, note the radical of the product references (example: LE1D + LRD)

Selection criteria							Solutions					
Load Power (kW) / 400V	Circuit isolation	Direct starter - ON/OFF	Reverser ON/REVERSE/OFF	Short circuit protection	Overload protection	Star - delta					Protection device to be added by customer *(of appropriate rating)*	See page
0.25..7.5		●			●		LE1M35				 LRD	A1/7
4 … 30									LE1D			A1/8
0.02… 30		●		●				GV2PC GV3PC			 GV2L	A1/9 + A1/10
0.02… 30								GV2PC GV3PC			GV2P	A1/9 + A1/10
0.06… 11		●		●	●			GV2MC GV3MP			 GV2ME	A1/11
2.2 … 15										LE4K LE4D	LR2K LRD	A1/12
2.2 … 30			●		●				LE2K LE2D		LR2K LRD	A1/13
2.2 … 15			●	●	●					LE8K LE8D	 LR2K LRD	A1/14
7.5...30		●			●	●			LE3D		LRD	A1/15
7.5...18.5		●	●	●	●	●				LE6D	LRD	A1/16

Life Is On Schneider Electric

PB121458.eps



LE1M35●●●●

Control + Protection against Overloads

- Direct Control: ON/OFF of 3-phase motor
- Motor protection: motor OFF in case of overload – manual reset with the red pushbutton.
- Indication: yellow light activated with the contactor coil.
- The LE1M35 starter, combined with short-circuit protection components, provides type 1 or type 2 coordination, depending on the type of devices used.

Range:
- 10 IEC motor starters, for 3P motors from 0.25 to 7.5 kW (400V AC)
- Configurable pushbuttons: impulse or latched
- Conforming to IEC 60947-4-1 standard
- Degree of protection IP65 , according IEC 60529
- Ambient air temperature in operation -5 to +40°C
- Operating position: same as K series contactors
- Material: self extinguishing ABS.

Included (standard version):
- 1 contactor LC1K●● (1)
- 1 thermal overload relay LR2K (2)
- 1 green Start button “I”,
- 1 red Stop/Reset button “O/R”,
- 1 yellow operating indicator
- earth + neutral terminals at bottom of enclosure.

For supply voltages between 380 and 440 V (codes Q7, V7, N7 or R7) the control circuit is pre-wired between phases. For other supply voltages, the control circuit must be wired by the customer.

Direct-on-line starters

Standard power ratings of 3-phase motors 50-60 Hz in category AC-3				Setting range of thermal overload relay LR2K	Basic reference, to be completed by adding the voltage code (3) (4)	Overall dimensions (5) WxHxD
220 V 230 V	240 V	380 V 400 V	415 V			
kW	kW	kW	kW	A		mm
0.12	0.12	0.25	0.25	0.54…0.8	**LE1M35●●05**	78x160x108
0.18	0.18	0.37	0.37	0.8…1.2	**LE1M35●●06**	78x160x108
0.25	0.25	0.55	0.55	1.2…1.8	**LE1M35●●07**	78x160x108
0.37	0.37	1.1	0.75	1.8…2.6	**LE1M35●●08**	78x160x108
0.55	0.55	1.5	1.5	2.6…3.7	**LE1M35●●10**	78x160x108
1.1	0.75	2.2	2.2	3.7…5.5	**LE1M35●●12**	78x160x108
1.5	1.1	3	3	5.5…8	**LE1M35●●14**	78x160x108
2.2	2.2	4	4	8…11.5	**LE1M35●●16**	78x160x108
3	3	5.5	5.5	10…14	**LE1M35●●21**	78x160x108
3.7	4	7.5	7.5	12…16	**LE1M35●●22**	78x160x108
Replacement contactor					**LC1K●●A80**	-

Coil voltage codes

Volts ~ 50/60 Hz	24	110	220	230	240	380	400	415	440
Code	B7	F7	M7	P7	U7	Q7	V7	N7	R7

(1) K contactor characteristic: refer to chapter B8.
(2) LR2K overload relay characteristics: refer to chapter B11.
(3) Remove the 2 last numbers if the thermal overload relay is not required. Example: LE1M35P7 instead of LE1M35P714.
(4) Please check the availability of your variant in the index page A1/34. The SEARCH function of your viewer can be used.
(5) Dimensions of standard versions, comprising (if any) handle, pushbutton, indicator light.

Dimensions: page A1/41
Schemes: page A1/41

TeSys Control
Enclosed standard starters / DOL / to be completed with Deca (1) overload relay
Product references



LE1D●●



LRD●●

Control + Protection against Overloads

■ ON/OFF motor starters: 1-way rotation control of 3-phase motor, by green & red pushbuttons
■ Motor protection against overload: manual reset with the red pushbutton or remotely.

Range:
■ 8 direct-on-line starters for 3P motors from 4 to 30 kW (9 to 65 A AC-3)
■ Choice of up to 12 AC coil voltages for control supply circuit (depending on starter rating).

Enclosures characteristics:
■ Conforming to IEC 60947-4-1 standard
■ Degree of protection according IEC 60529:
□ IP65,
□ IK07 for LED09…D35,
□ IK09 for LE1D40A…D65A
■ Ambient air temperature in operation -5 to +40°C
■ Operating position: same that as contactors
■ Material: LE1D09… D35 polycarbonate (2)
■ LE●D40A… D65A steel sheet.

Included:
■ 1 pre-wired LC1D contactor
■ 2 Harmony XB5 pushbuttons.
An LRD overload relay of the required rating must be ordered separately and wired at bottom of the contactor.

Direct on-line starters

Standard power ratings of 3-phase motors 50-60 Hz in category AC-3						Max. current Ith up to	Basic reference, to be completed by adding the voltage code (3)	Weight	Overall dimensions (4) WxHxD
220 V 230 V	380 V 400 V	415 V	440 V	500 V	660 V 690 V				
kW	kW	kW	kW	kW	kW	A		kg	mm
2.2	4	4	4	5.5	5.5	**9**	**LE1D09●●**	0.920	88x166x128.5
3	5.5	5.5	5.5	7.5	7.5	**12**	**LE1D12●●**	0.920	88x166x128.5
4	7.5	7.5	7.5	9	10	**17**	**LE1D18●●**	1.015	101x201x153.5
5.5	11	11	11	15	15	**22**	**LE1D25●●**	1.015	101x201x153.5
7.5	15	15	15	18.5	18.5	**26.5**	**LE1D35●●**	4.320	101x201x153.5
11	18.5	22	22	22	30	**40**	**LE1D40A●●**	4.820	200x300x158.5
15	22	25	30	30	33	**50**	**LE1D50A●●**	4.850	200x300x158.5
18.5	30	37	37	37	37	**65**	**LE1D65A●●**	4.850	200x300x158.5

Variants (pre-assembled)

Description	Available variants for starter	Suffix to be added to the starter reference (3)
No pushbuttons on cover	LE1D09…D65A●●	**A04**
1 blue Reset button “R”	LE1D09…D65A●●	**A05**
1 3-position stay put selector switch (“I”-“O”-“II”) (“I”: Automatic Start; “O”: Stop; “II”: Manual Start) 1 blue Reset button “R”	LE1D09…D25●●	**A09**
1 2-position stay put selector switch “O”-“I” (“O”: Stop; “I”: Manual Start) 1 blue Reset button “R”	LE1D09…D25●●	**A13**
Mounting of an LC1D09 contactor in an enclosure identical to LE1D18	LE1D09P7 LE1D09P7A13	**T**

Coil voltage codes (3)

Volts ~ 50/60 Hz	24	48	110	115	120	220	230	240	380	400	415	440
LE1D09 to D35	B7	E7	F7	FE7	G7	M7	P7	U7	Q7	V7	N7	R7
LE1D40A to D65A	–	–	–	FE7	–	–	P7	–	Q7	–	–	–

(1) LRD overload relay selection: product reference page A1/33, more details in chapter B11.
(2) Avoid placing this material in contact with harsh substances (detergents, chlorine solvents ketones, alcohol, aromatic hydrocarbons).
(3) Please check the availability of your variant in the index page A1/34. The SEARCH function of your viewer can be used.
(4) Dimensions of standard versions, comprising (if any) handle, pushbutton, indicator light.

Dimensions: page A1/46
Schemes: page A1/47



GV2PC01



GV2L



GV3PC02



GV3L

Control + Isolation + Protection against Short circuits

2 solutions according to the required current rating.
GV2PC + GV2L > up to 23 A (Ithe)
GV3PC + GV3L > up to 55 A (Ithe)
The GV2L or GV3L circuit breaker of the required rating must be ordered separately.

- Circuit isolation
- ON/OFF motor starters: 1-way rotation control of 3-phase motor
- Padlocking:
  - in ON or OFF position (PGV2PC01, GV3PC01),
  - in OFF position (GV2PC02, GV3PC02).

Suitable circuit breakers:
- GV2L - 12 ratings (3P motors from 0.09 to 11 kW - 400/415 V AC)
- GV3L - 3 ratings (3P motors from 18.5 to 30 kW - 400/415 V AC).

Enclosures characteristics:
- Conforming to IEC 60947-2
- Degree of protection according IEC 60529:
  - IP65, IK08 (for GV2PC),
  - IK09 (for GV3PC)
- Ambient air temperature in operation -5 to +40°C
- Operational voltage (Ue): 690V
- Material: GV2PC polycarbonate (2), GV3PC steel sheet.

Included:
- GV rotary handle.

Enclosures fitted with padlockable rotary handle

Composition	Type	Reference	Overall dimensions (3) WxHxD
			mm
■ Insulating enclosure ■ Black handle, padlockable in ON/OFF position	Surface mounting For GV2L	**GV2PC01**	88x166x163
■ Insulating enclosure ■ Red handle on yellow background, padlockable in OFF position	Surface mounting For GV2L	**GV2PC02**	88x166x163
■ Metal enclosure ■ Black handle, padlocking in ON/OFF position ■ Circuit breaker/handle adapter	Surface mounting For GV3L	**GV3PC01**	200x300x200
■ Metal enclosure ■ Red handle, padlocking in OFF position ■ Circuit breaker/handle adapter	Surface mounting For GV3L	**GV3PC02**	200x300x200

GV2L, GV3L product references: add code to product reference (4)

Ithe (A)	**0.4**	**0.63**	**1**	**1.6**	**2.5**	**4**	**6.3**	**9**	**13**	**17**	**21**	**23**
GV2L codes	03	04	05	06	07	08	10	14	16	20	21	22
Ithe (A)	**35**	**41**	**55**									
GV3L codes	40	50	65									

(1) GV2, GV3 circuit breaker not included - characteristics: refer to chapter B6.
(2) Avoid placing this material in contact with harsh substances (detergents, chlorine solvents, ketones, alcohol, aromatic hydrocarbons).
(3) Dimensions of standard versions, comprising (if any) handle, pushbutton, indicator light.
(4) Example: for Ithe 17 A, magnetic circuit breaker is GV2L20.

Dimensions: page A1/43
Schemes: page A1/43

TeSys Control
Enclosed standard starters / DOL / to be completed with Deca (1) thermal-magnetic circuit breaker
Product references

PB112219.eps



GV2PC01

PB121672.eps



GV2P●●

PB112222.eps



GV3PC02

PB121680.eps



GV3P●●

Control + Isolation + Protection against Short circuits and Overloads

For OEM, 2 solutions according to the required current rating.
GV2PC + GV2P > up to 23 A (Ithe)
GV3PC + GV3P > up to 55 A (Ithe)The enclosure includes a rotary handle.
The GV2P or GV3P circuit breaker of the required rating must be ordered separately.

- Circuit isolation
- ON/OFF motor starters: 1-way rotation control of 3-phase motor
- Padlocking:
  - in ON or OFF position (GV2PC01, GV3PC01),
  - in OFF position (GV2PC02, GV3PC02).

Suitable circuit breakers:
- GV2P - 14 ratings (3P motors from 0.06 to 11 kW - 400/415 V AC)
- GV3P - 2 ratings (3P motors from 18.5 to 30 kW - 400/415 V AC).

Enclosures characteristics:
- Conforming to IEC 60947-2
- Degree of protection according IEC 60529: IP65, IK08 (for GV2PC), IK09 (for GV3PC)
- Ambient air temperature in operation -5 to +40°C
- Operational voltage (Ue) 690V
- Material: GV2PC polycarbonate (2), GV3PC steel sheet.

Included:
- GV rotary handle.

Enclosures fitted with padlockable rotary handle

Composition	Type	Reference	Overall dimensions (3) WxHxD
			mm
■ Insulating enclosure ■ Black handle, padlockable in ON/OFF position	Surface mounting For GV2L	**GV2PC01**	88x166x163
■ Insulating enclosure ■ Red handle on yellow background, padlockable in OFF position	Surface mounting For GV2L	**GV2PC02**	88x166x163
■ Metal enclosure ■ Black handle, padlocking in ON/OFF position ■ Circuit breaker/handle adapter	Surface mounting For GV3L	**GV3PC01**	200x300x200
■ Metal enclosure ■ Red handle, padlocking in OFF position ■ Circuit breaker/handle adapter	Surface mounting For GV3L	**GV3PC02**	200x300x200

GV2P, GV3P product references: add code to product reference (4)

Ithe (A)	0.16	0.25	0.4	0.63	1	1.6	2.5	4	6.3	9	13	17	21	23
GV2P codes	01	02	03	04	05	06	07	08	10	14	16	20	21	22
Ithe (A)	**35**	**41**	**55**											
GV3P codes	40	50	65											

(1) GV2, GV3 circuit breaker not included - characteristics: refer to chapter B6.
(2) Avoid placing this material in contact with harsh substances (detergents, chlorine solvents, ketones, alcohol, aromatic hydrocarbons).
(3) Dimensions of standard versions, comprising (if any) handle, pushbutton, indicator light.
(4) Example: for Ithe 17 A, magnetic circuit breaker is GV2P20.

Dimensions: page A1/43
Schemes: page A1/43



GV2MC02, GV2MC03



GV2ME●●



GV2MP01, GV2MP02



GV2ME●●

Control + Isolation + Protection against Short circuits and Overloads

For OEM, 2 solutions, according to the enclosure installation mode:
GV2MC surface mounting enclosure for GV2ME circuit breaker
GV2MP flush mounting enclosure for GV2ME circuit breaker.
The GV2ME circuit breaker of the required rating must be ordered separately.

- Circuit isolation
- ON/OFF motor starters: 1-way rotation control of 3-phase motor
- Short-circuit and adjustable overload protection
- Padlocking in OFF position.

Suitable circuit breakers:
- GV2ME - 14 ratings (3P motors from 0.06 to 11 kW - 400/415 V AC).

Enclosures characteristics:
- Conforming to IEC 60947-2; IEC 60947-4-1
- Degree of protection according IEC 60529: refer to selection chart
- Operational voltage (Ue) 690 V
- Material: polycarbonate (2).

Included:
- GV2E01 or GV2E02 sealing kit (fixed on the front plate).

Enclosures for thermal-magnetic circuit breakers GV2ME

Type	Degree of protection	Possible no. of side mounting auxiliary contact blocks on GV2ME		Reference	Weight	Overall dimensions (3) WxHxD
		LH side	RH side		kg	mm
Surface mounting, double insulated with protective conductor. Sealable cover	IP41	1	1	**GV2MC01**	0.290	93x147x84
	IP55	1	1	**GV2MC02**	0.300	93x147x84
				or **GV2MCK04** (4)	0.420	93x147x145.5
	IP55 for temperature < +5 °C	1	1	**GV2MC03**	0.300	93x147x84
Flush mounting, with protective conductor	IP41 (front face)	1	1	**GV2MP01**	0.115	106.5x140x83
	IP41 (front face reduced flush mounting)	–	1	**GV2MP03**	0.115	106.5x140x98
	IP55 (front face)	1	1	**GV2MP02**	0.130	106.5x140x83
	IP55 (front face reduced flush mounting)	–	1	**GV2MP04**	0.130	106.5x140x98

GV2ME product references: add code to product reference (5)

Ithe (A)	0.16	0.25	0.4	0.63	1	1.6	2.5	4	6.3	9	13	17	21	23
GV2ME codes	01	02	03	04	05	06	07	08	10	14	16	20	21	22

GV2MC, GV2MP enclosures with complementary circuit breaker and mushroom head pushbutton allow the construction of safety direct-on-line starters conforming INRS and VDE0113.
Surface and flush mounting enclosures, mushroom heads, circuit breakers and undervoltage release cover a large number of applications.

*(1) Characteristics of **GV2ME** circuit breakers and additives: refer to page A1/32.*
(2) Enclosure not suitable in atmosphere contaminated with harsh substances (detergents, chlorine solvents, ketones, alcohol, aromatic hydrocarbons).
(3) Dimensions of standard versions, comprising (if any) handle, pushbutton, indicator light
*(4) Enclosure **GV2MCK04** is fitted with a **GV2K04** mushroom head Emergency stop pushbutton as standard.*
*(5) Example: for Ithe 17 A, magnetic circuit breaker is **GV2ME20.***

Dimensions:
page A1/44

Schemes:
page A1/45

TeSys Control
Enclosed standard starters / DOL / to be completed with LR2K, Deca (1) overload relays
Product references

PB121460.eps



LE4K●●●●



PB123794.tif

LR2K●●

PB121463.eps



LE4D●●●●



PB121670.tif

LRD●●

Control + Isolation + Protection against Short circuits and Overloads

■ ON/OFF motor starters: 1-way rotation control of 3-phase motor, by green & red pushbuttons
Option: no pushbutton on cover
■ Circuit disconnection by side black handle
■ Protection against short circuits by NFC fuses type aM (to be ordered separately)
■ Motor protection against overload – manual reset with the red pushbutton or remotely. Option: cover with just a "Reset" blue pushbutton.
An LR2K or LRD overload relay of the required rating must be ordered separately and wired at bottom of the contactor (1).

Ranges:
■ 8 partially pre-equipped enclosures to build-up 3P motor starters from 2.2 to 15 kW (6 to 35 A AC-3)
■ Choice of 5 coils for LE4K●●, 12 coils for LE4D●●, for control with different AC voltages.

Enclosures characteristics:
■ Conforming to IEC 60947-4-1 standard
■ Degree of protection according IEC 60529:
□ IP65, IK09 for LE4KIP65,
□ IK07 for LE4D,
■ Ambient air temperature in operation -5 to +40°C
■ Operating position: same that as contactors
■ Material: LE4K and LE4D polycarbonate (2).

Included:
■ 1 fuse carrier with external side handle
■ 1 pre-wired LC1K or LC1D contactor
■ 2 Harmony XB5 pushbuttons.

Direct-on-line starters

Standard power ratings of 3-phase motors 50-60 Hz in category AC-3						Max. current Ith up to	Fuses to be fitted by the customer			Basic reference, to be completed by adding the voltage code (3) (4)	Weight	Overall dimensions (5) WxHxD
220 V 230 V	380 V 400 V	415 V	440 V	500 V	660 V 690 V		Size	Type aM				
kW	kW	kW	kW	kW	kW	A		A			kg	mm
1.5	2.2	2.2	3	–	–	**6**	10 x 38	10		**LE4K065●●**	1.450	206x165x146
2.2	4	4	4	–	–	**9**	10 x 38	12		**LE4K095●●**	1.450	206x165x146
									or	**LE4D09●●** (6)	1.960	217x348x175.5
2.2	4	4	4	5.5	–	**9**	10 x 38	12		**LE4D09●●**	1.960	217x348x175.5
3	5.5	5.5	5.5	7.5	–	**12**	10 x 38	16		**LE4D12●●**	1.960	217x348x175.5
4	7.5	9	9	10	–	**18**	10 x 38	20		**LE4D18●●**	2.200	217x348x175.5
5.5	11	11	11	15	–	**25**	10 x 38	25		**LE4D25●●**	2.200	217x348x175.5
7.5	15	15	15	18.5	18.5	**26.5**	14 x 51	32		**LE4D35●●**	5.190	217x348x175.5

Voltages code (4)												
Volts ~ 50/60 Hz	**24**	**48**	**110**	**115**	**120**	**220**	**230**	**240**	**380**	**400**	**415**	**440**
LE4D	B7	E7	F7	FE7	G7	M7	P7	U7	Q7	V7	N7	R7
LE4K	–	–	–	–	–	M7	P7	U7	Q7	V7	–	–

Supply voltages between 380 and 440 V (codes Q7, V7, N7 or R7): pre-wired control circuit between phases.
Other supply voltages: control circuit must be wired by the customer.

(1) LR2K, LRD overload relay selection: product references page A1/33, more details in chapter B11.
(2) Avoid placing this material in contact with harsh substances (detergents, chlorine solvents, ketones, alcohol, aromatic hydrocarbons.
(3) LE4D●●● (with P7 and V7 coil) with no pushbutton on cover: add "A04" to product reference (example: LE4D25V7A04).
LE4D●●● (with P7 and V7 coil) with overload "Reset" blue pushbutton only on cover: > add "A05" to full product reference.
(4) Please check the availability of your variant in the index page A1/34. The SEARCH function of your viewer can be used.
(5) Dimensions of standard versions, comprising (if any) handle, pushbutton, indicator light .
(6) Selection according to dimensions and the number of operating cycles, please consult your Regional Sales Office.

Dimensions: page A1/48
Schemes: page A1/49

PB121465.eps



LE2K09●●●



PB123794.tif

LR2K●●

PB112274.eps



LE2D12●●●



PB121670.tif

LRD●●

Reverse Control + Isolation + Protection against Overloads

■ ON/REVERSE/OFF motor starters: 2-way rotation control of 3-phase motor
□ by black I-II position spring return selector, red STOP/RESET pushbuttons for LE2K●● starters
□ by black ON ↑ , ON ↓ pushbuttons, red STOP/RESET pushbutton for LE2D●● starters
■ Motor protection against overload: manual reset with the red pushbutton or remotely.
An LR2K or LRD overload relay of the required rating must be ordered separately and wired at bottom of the contactor.

Ranges:
■ for 3P motors from 4 to 30 kW (9 to 65 A AC-3), in 11 ranges of reverser starters
■ Choice of up to 7 AC coils voltages (depending on starter) for control supply circuit.

Enclosures characteristics:
■ Conforming to IEC 60947-4-1 standard
■ Degree of protection according IEC 60529: IP65, IK07 for LED09●●●D35, IK09 for LE2K and LE●D40A●●●D65A,
■ Ambient air temperature in operation -5 to +40°C
■ Operating position: same that as contactors
■ Material: LE2K and LE●D09●●●D35 polycarbonate (2)
■ LE●D40A●●● D65A steel sheet.

Included:
■ 2 pre-wired LC1K or LC1D contactor
■ 3 Harmony XB5 pushbuttons - or -1 Harmony XB5 pushbutton + 1 Harmony XB5 switch.

Reversing starters

Standard power ratings of 3-phase motors 50-60 Hz in category AC-3						Maximum current Ith up to	Basic reference, to be completed by adding the voltage code (3)	Weight	Overall dimensions (4) WxHxD
220 V 230 V	380 V 400 V	415 V	440 V	500 V	660 V 690 V				
kW	kW	kW	kW	kW	kW	A		kg	
1.5	2.2	2.2	3	–	–	**6**	**LE2K065●●**	1.080	175x165x146
2.2	4	4	4	–	–	**9**	**LE2K095●●**	1.080	175x165x146
							LE2D09●● (5)	2.100	101x201x153.5
–	–	–	–	5.5	5.5	**9**	**LE2D09●●**	2.100	101x201x153.5
3	5.5	5.5	5.5	7.5	7.5	**12**	**LE2D12●●**	2.100	101x201x153.5
4	7.5	7.5	7.5	9	10	**17**	**LE2D18●●**	2.410	101x201x153.5
5.5	11	11	11	15	15	**22**	**LE2D25●●**	2.570	101x201x153.5
7.5	15	15	15	18.5	18.5	**26.5**	**LE2D35●●**	4.100	101x201x153.5
11	18.5	22	22	22	30	**40**	**LE2D40A●●**	5.270	200x300x174
15	22	25	30	30	33	**50**	**LE2D50A●●**	5.470	200x300x174
18.5	30	37	37	37	37	**65**	**LE2D65A●●**	5.470	200x300x174

Coil voltage codes (3)												
Volts ~ 50/60 Hz	**24**	**48**	**110**	**115**	**120**	**220**	**230**	**240**	**380**	**400**	**415**	**440**
LE2D40A to D65A	–	–	–	FE7	–	–	P7	–	Q7	–	–	–
LE2D09 to D35	B7	–	–	–	–	M7	P7	U7	Q7	V7	N7	–
LE2K	–	–	–	–	–	M7	P7	U7	Q7	V7	–	–

(1) LR2K, LRD overload relay selection: product references page A1/33, more details in chapter B11.
(2) Avoid placing this material in contact with harsh substances (detergents, chlorine solvents, ketones, alcohol, aromatic hydrocarbons.
(3) Please check the availability of your variant in the index page A1/34. The SEARCH function of your viewer can be used.
(4) Dimensions of standard versions, comprising (if any) handle, pushbutton, indicator light.
(5) Selection according to dimensions and the number of operating cycles, please consult your Regional Sales Office.

Dimensions: page A1/46
Schemes: page A1/47

TeSys Control
Enclosed standard starters / DOL / to be completed with LR2K, Deca (1) overload relays
Product references

PB121466.eps



LE8K●●●●

PB123794.tif



LR2K●●

PB112301.eps



LE8D●●●●

PB121670.tif



LRD●●

Reverse Control + Isolation + Protection against Short circuits and Overloads

■ ON/REVERSE/OFF motor starters: 2-way rotation control of 3-phase motor
□ LE8K●●starters, by white ↑, black ↓, red Stop/Reset pushbuttons
□ LE8D●● starters, by black I-II position spring return selector, red Stop/Reset pushbutton
□ Option: no pushbutton on cover
■ Circuit disconnection by side black handle
■ Protection against short circuits by NFC fuses type aM (to be ordered separately)
■ Motor protection against overload: manual reset with the red pushbutton or remotely. LE8D option: cover with just a "Reset" blue pushbutton.
An LR2K or LRD overload relay of the required rating must be ordered separately and wired at bottom of a the contactor.

Ranges:
■ 8 partially pre-equipped enclosures to build-up 3P motor reversers from 2.2 to 15 kW (6 to 35 A AC-3)
■ Choice of 3 coils for control with different AC voltages.

Enclosures characteristics:
■ Conforming to IEC 60947-4-1 standard
■ Degree of protection according IEC 60529: IP65, IK09 for LE8KIP65, IK07 for LE8D
■ Ambient air temperature in operation -5 to +40°C
■ Operating position: same that as contactors
■ Material: LE8K and LE8D09●●●D35 polycarbonate (2).

Included:
■ 1 fuse carrier with external side handle
■ 2 pre-wired LC1K or LC1D contactors
■ 3 Harmony XB5 pushbuttons - or -1 Harmony XB5 pushbutton + 1 Harmony XB5 switch.

Reversing starters

Standard power ratings of 3-phase motors 50-60 Hz in category AC-3						Maximum current Ith up to	Fuses to be fitted by the customer		Basic reference, to be completed by adding the voltage code (3) (4)	Weight	Overall dimensions (5) WxHxD
220 V 230 V	380 V 400 V	415 V	440 V	500 V	660 V 690 V		Size	Type aM			
kW	kW	kW	kW	kW	kW	A		A		kg	
1.5	2.2	2.2	3	–	–	**6**	10 x 38	10	**LE8K065●●**	1.600	206x165x146
2.2	4	4	4	–	–	**9**	10 x 38	12	**LE8D09●●** (6)	3.550	217x348x182
–	–	–	–	5.5	–	**9**	10 x 38	12	**LE8D09●●**	3.550	217x348x182
3	5.5	5.5	5.5	7.5	–	**12**	10 x 38	16	**LE8D12●●**	3.550	217x348x182
4	7.5	9	9	10	–	**17**	10 x 38	20	**LE8D18●●**	3.700	217x348x182
5.5	11	–	–	–	–	**22**	10 x 38	25	**LE8D25●●**	4.670	217x348x182
7.5	15	15	15	18.5	18.5	**26.5**	14 x 51	32	**LE8D35●●**	5.800	217x348x182

Voltage codes (4)												
Volts ~ 50/60 Hz	**24**	**48**	**110**	**115**	**120**	**220**	**230**	**240**	**380**	**400**	**415**	**440**
LE8 K, LE8 D	–	–	–	–	–	–	P7	–	Q7	V7	–	–

(1) LR2K, LRD overload relay selection: product references page A1/33, more details in chapter B11.
(2) Avoid placing this material in contact with harsh substances (detergents, chlorine solvents, ketones, alcohol, aromatic hydrocarbons.
(3) LE8K●●●●●, LE8D●●●● (with P7 and V7 coil) with no pushbutton on cover: add "A04" to product reference (example: LE8K065P7A04, LE8D25V7A04) LE4D●●●● (with P7 and V7 coil) with only one pushbutton on cover: overload "Reset" blue pushbutton > add "A05"to full product reference.
(4) Please check the availability of your variant in the index page A1/34. The SEARCH function of your viewer can be used.
(5) Dimensions of standard versions, comprising (if any) handle, pushbutton, indicator light.
(6) Selection according to dimensions and the number of operating cycles, please consult your Regional Sales Office.

Dimensions: page A1/48
Schemes: page A1/49



LE3D

+



LRD●●

Star-delta Control + Protection against Overload

■ Star-delta starting of 3-phase motor: ON by green pushbutton, OFF by red pushbutton. Option: no pushbutton on cover
□ Maximum operating rate: 30 starts/hour.
□ Maximum starting time: 30 seconds.
□ Delay of 40 ms ±15 ms at changeover by LAD S2 timer on delta contactor to provide sufficient time for star contactor to break.
■ Motor protection against overload: manual reset with the red pushbutton or remotely.
An LRD overload relay of the required rating must be ordered separately and wired at bottom of the contactor.

Range:
■ 4 partially pre-equipped enclosures to build-up 3P motor starters from 7.5 to 30 kW. Choice of 7 coils for control with different AC voltages.

Enclosures characteristics:
■ Conforming to IEC 60947-4-1 standard
■ Degree of protection according IEC 60529: IP65, IK07
■ Ambient air temperature in operation -5 to +40°C
■ Operating position: same that as contactors
■ Material: polycarbonate (2).

Included:
■ 3 pre-wired LC1D contactors
■ 2 Harmony XB5 pushbuttons.

Star-delta starters

Standard power ratings of squirrel cage motors Mains voltage - delta connection				Basic reference, to be completed by adding the voltage code (3) (4)	Weight	Overall dimensions (5) WxHxD
220 V	380/400 V	415 V	440 V			
kW	kW	kW	kW		kg	
4	7.5	7.5	7.5	**LE3D09●●**	3.650	186x348x175.5
5.5	11	11	11	**LE3D12●●**	3.650	186x348x175.5
11	18.5	22	22	**LE3D18●●**	3.750	186x348x175.5
11	22	26	26	**LE3D35●●**	5.160	186x348x175.5

Voltage codes (4)							
Volts ~ 50/60 Hz	**24**	**220**	**230**	**240**	**380**	**400**	**415**
LE3 D	B7	M7	P7	U7	Q7	V7	N7

(1) LRD overload relay selection: product references page A1/33, more details in chapter B11 - Select appropriate overload relay for setting at 0.58 of the full load rated motor current.
(2) Avoid placing this material in contact with harsh substances (detergents, chlorine solvents, ketones, alcohol, aromatic hydrocarbons).
*(3) LE3D●●●● (with P7 and V7 coil) with no pushbutton on cover: add "**A04**"to product reference (example: LE3D18P7A04).*
(4) Please check the availability of your variant in the index page A1/34. The SEARCH function of your viewer can be used.
(5) Dimensions of standard versions, comprising (if any) handle, pushbutton, indicator light.

Dimensions: page A1/50
Schemes: page A1/50

PB121469.eps



LE6D●●●●



PB121670.tif

LRD●●

Star-delta Control + Disconnection + Protection against Short circuits and Overloads

■ Star-delta starting of 3-phase motor: ON by green pushbutton, OFF by red pushbutton. Options: no pushbutton, “Reset” pushbutton only
□ Maximum operating rate: 30 starts/hour.
□ Maximum starting time: 30 seconds.
□ Delay of 40 ms ±15 ms at changeover by LAD S2 timer on delta contactor to provide sufficient time for star contactor to break.
■ Circuit disconnection by side black handle
■ Protection against short circuits by NFC fuses type aM (to be ordered separately)
■ Motor protection against overload: manual reset with the red pushbutton or remotely.
An LRD overload relay of the required rating must be ordered separately and wired at bottom of the contactor.

Range:
■ 4 partially pre-equipped enclosures to build-up 3P motor starters from 7.5 to 30 kW choice of 7 coils for control with different AC voltages.

Enclosures characteristics:
■ Conforming to IEC 60947-4-1 standard
■ Degree of protection according IEC 60529: IP65, IK07
■ Ambient air temperature in operation -5 to +40°C
■ Operating position: same that as contactors
■ Material: polycarbonate (2).

Included:
■ 1 fuse carrier with external side handle
■ 3 pre-wired LC1D contactors
■ 2 Harmony XB5 pushbuttons.

Star-delta starters

Standard power ratings of squirrel cage motors Mains voltage - delta connection				Fuses to be fitted by the customer		Basic reference, to be completed by adding the voltage code (3)	Weight	Overall dimensions (4) WxHxD
220 V	380/400 V	415 V	440 V	Size	Type aM			
kW	kW	kW	kW				kg	
4	7.5	7.5	7.5	10 x 38	20	**LE6D09●●**	3.900	217x348x175.5
5.5	11	11	11	10 x 38	25	**LE6D12●●**	3.900	217x348x175.5
11	18.5	22	22	14 x 51	40	**LE6D18●●**	4.850	217x348x175.5

Voltage codes			
Volts ∼ 50/60 Hz	**24**	**230**	**400**
LE6 D	B7	P7	V7

(1) LRD overload relay selection: product references page A1/33, more details in chapter B11 - Select appropriate overload relay for setting at 0.58 of the full load rated motor current.
(2) Avoid placing this material in contact with harsh substances (detergents, chlorine solvents, ketones, alcohol, aromatic hydrocarbons).
(3) Please check the availability of your variant in the index page A1/34. The SEARCH function of your viewer can be used.
(4) Dimensions of standard versions, comprising (if any) handle, pushbutton, indicator light.

Dimensions: page A1/42
Schemes: page A1/42

Introduction & selection table

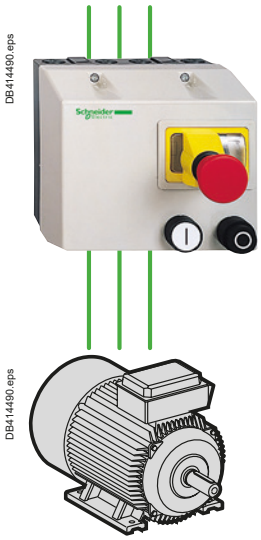

Range of pre-assembled safety motor starters, with mushroom pushbuttons, protection and control components in a robust casing

They can be fixed on a wall, on a panel, or on the chassis of a machine. They provide the operator with safety machine controls complying with IEC 60204-1.

With numerous advantages to meet OEM's most common needs

- IEC
- Multiple ratings and sizes
- IP55
- IK07
- Pre-wired

Safety starters

They provide similar functions as standard starters but also include emergency stops to comply with IEC 60204-1 machine safety standards.

Selection in 2 steps

1 Identify your need (on a single line) in the **Selection criteria** area (example: Load 5 kW – Visible circuit isolation, ON/OFF control with short circuit / overload protection)

2 Choose your **Solutions** by adding column contents, note the radical of the product references (example: LG1D)

Selection criteria							Solutions						
Load Power (kW) / 400 V supply	Direct starter ON/OFF	Reverser ON/REVERSE/OFF	Short circuit / overload protection	Power circuit isolation	Visible isolation by rotary switch	Isolated control circuit by transfo							See page
0.06...4	●		●	●			LG7K						A1/18
4 ... 9							LG7D						A1/18
0.06... 4	●		●	●	●			LG1K					A1/19
4... 9								LG1D					A1/19
0.06... 4	●		●	●		●			LJ7K				A1/20
0.06... 5.5		●	●	●						LG8K			A1/21
0.06 ... 4		●	●	●		●					LJ8K		A1/22
0.06 ... 15	●		●	●								GV2MCK04 GV2ME GV2AX	A1/23

PB121470.eps



LG7K06

PB111886.eps



LG7K09, LG7D●●

For Control + Isolation + Short circuit / Overload Protection

Enclosed safety motor starters complying with IEC 60204-1 “Safety of machinery” standards.

- ON/OFF motor starters: 1-way rotation control of 3-phase motor
- Emergency stop
- Electrical circuit isolation, lockable (from LG7K09) with up to 3 padlocks
- Short circuit protection
- Overload protection
- Undervoltage protection (LG7K06: with additional undervoltage release module).

Switching back on power supply after tripping must be a deliberate action.

Range:
- 12 pre-equipped enclosed safety starters from 0.06 to 9 kW.

Enclosures characteristics:
- Conforming to IEC 60947-1, IEC 60204-1
- Degree of protection according IEC 60529: IP55, IK07
- Ambient air temperature in operation -5 to +40°C
- Operational voltage (Ue) 690 V
- Operating position: same that as contactors
- Material: polycarbonate (1).

Included:
- 1 GV2ME thermal magnetic circuit breaker (with mushroom emergency stop with LG7K06) (2)
- 1 LC1K or LC1D pre-wired contactor
- 1 Harmony emergency stop pushbutton (from LG7K09)
- 2 Harmony XB5 pushbuttons.
- 1 GVAX undervoltage release module (from LG7K09).

Additional GVAX●● undervoltage release module for LG7K06 – to be ordered separately.
Additional GV2SN●● Indicator light – to be ordered separately.

Non-reversing starters (with pushbutton control of isolation)

Standard power ratings of 3-phase motors 50-60 Hz in category AC-3			Circuit breaker	Dust & damp protected starter	Weight	Overall dimensions (4) WxHxD
220/ 230 V	400/ 415 V	440 V	Setting range of thermal trips	Basic reference, to be completed by adding the voltage code (3)		
kW	kW	kW	A		kg	
–	0.06	0.06	0.16…0.25	**LG7K06●●02**	1.300	175x165x177
0.06	0.09	0.12	0.25…0.40	**LG7K06●●03**	1.300	175x165x177
–	0.18	0.18	0.40…0.63	**LG7K06●●04**	1.300	175x165x177
0.12	0.25	0.37	0.63…1	**LG7K06●●05**	1.300	175x165x177
0.25	0.55	0.55	1…1.6	**LG7K06●●06**	1.300	175x165x177
0.37	0.75	1.1	1.6…2.5	**LG7K06●●07**	1.300	175x165x177
0.75	1.5	1.5	2.5…4	**LG7K06●●08**	1.300	175x165x177
1.1	2.2	3	4…6.3	**LG7K06●●10**	1.300	175x165x177
1.5	4	4	6…10	**LG7K09●●14**	1.450	175x165x177
3	5.5	5.5	9…14	**LG7D12●●16**	1.600	175x165x177
4	7.5	9	13…18	**LG7D18●●20**	1.630	175x165x177
4	9	9	17…23	**LG7D18●●21**	1.630	175x165x177

Voltage codes (3)						
Volts ∼ 50/60 Hz	24	220/ 230	230	380/ 400	400	400/415 for LG7K)
LG7K, LG7D	B7	M7	P7	Q7	V7	N7

(1) Avoid placing this material in contact with harsh substances (detergents, chlorine solvents, ketones, alcohol, aromatic hydrocarbons).
*(2) **LG7K09, D12, D18:** the Emergency Stop function is performed by an undervoltage trip module acting on the circuit breaker. This circuit breaker is always pre-wired for use on 380/400/415 V 50 Hz supply.*
For a 60 Hz supply, please consult your Regional Sales Office.
(3) Please check the availability of your variant in the index page A1/34. The SEARCH function of your viewer can be used.
(4) Dimensions of standard versions, comprising (if any) handle, pushbutton, indicator light.

Dimensions: page A1/52
Schemes: page A1/53

PB111894.eps



LG1K065

For Control + Visible Isolation + Short circuit / Overload Protection

Enclosed safety motor starters complying with IEC 60204-1 “Safety of machinery” standards.

- ON/OFF motor starters: 1-way rotation control of 3-phase motor
- Emergency stop
- Electrical circuit isolation, lockable with up to 3 padlocks
- Short circuit protection
- Overload protection
- Undervoltage protection (with additional undervoltage release module).

Switching back on power supply after tripping must be a deliberate action.

Range:
- 12 pre-equipped enclosed safety starters from 0.06 to 9 kW.

Enclosures characteristics:
- Conforming to IEC 60947-1, IEC 60204-1
- Degree of protection according IEC 60529 : IP55, IK07
- Ambient air temperature in operation -5 to + 40°C
- Operational voltage (Ue) 690 V
- Operating position: same that as contactors
- Material: polycarbonate (1)
- Enclosure cannot be opened when energized in position “I”.

Included:
- 1 GV2ME thermal magnetic circuit breaker
- 1 LC1K (LG1K starters) or LC1D (LG1D starters) pre-wired contactor
- Switch with rotary red/yellow handle for isolation and emergency
- 2 Harmony XB5 pushbuttons.

Additional GVAX●● undervoltage release module – to be ordered separately.
Additional GV2SN●● indicator light – to be ordered separately.

Non-reversing starters (with rotary operator for control of isolation)
Enclosure cannot be opened when energised in position “I”.

Standard power ratings of 3-phase motors 50-60 Hz in category AC-3			Circuit breaker Setting range of thermal trips	Dust & damp protected starter Basic reference, to be completed by adding the voltage code (2)	Weight	Overall dimensions (3) WxHxD
220/ 230 V	400/ 415 V	440 V				
kW	kW	kW	A		kg	
–	0.06	0.06	0.16…0.25	**LG1K065●●02**	0.970	175x165x165
0.06	0.09	0.12	0.25…0.40	**LG1K065●●03**	0.970	175x165x165
–	0.18	0.18	0.40…0.63	**LG1K065●●04**	0.970	175x165x165
0.12	0.25	0.25	0.63…1	**LG1K065●●05**	0.970	175x165x165
0.25	0.55	0.55	1…1.6	**LG1K065●●06**	0.970	175x165x165
0.37	0.75	1.1	1.6…2.5	**LG1K065●●07**	0.970	175x165x165
0.75	1.5	1.5	2.5…4	**LG1K065●●08**	0.970	175x165x165
1.1	2.2	3	4…6.3	**LG1K065●●10**	0.970	175x165x165
1.5	4	4	6…10	**LG1K095●●14**	1.120	175x165x165
3	5.5	5.5	9…14	**LG1D122●●16**	1.270	175x165x165
4	7.5	9	13…18	**LG1D182●●20**	1.290	175x165x165
4	9	9	17…23	**LG1D182●●21**	1.290	175x165x165

Voltage codes (2)					
Volts ∼ 50/60 Hz	220/ 230	230	380/ 400	400	400/415 (for LG1K)
LG1K, LG1D	M7	P7	Q7	V7	N7

(1) Avoid placing this material in contact with harsh substances (detergents, chlorine solvents, ketones, alcohol, aromatic hydrocarbons).
(2) Please check the availability of your variant in the index page A1/34. The SEARCH function of your viewer can be used.
(3) Dimensions of standard versions, comprising (if any) handle, pushbutton, indicator light.

Dimensions: page A1/52
Schemes: page A1/53

PB111880.eps



LJ7K06

For Control + Isolation + Short circuit / Overload Protection, with isolated 24 V control circuit

Enclosed safety motor starters complying with IEC 60204-1 “Safety of machinery” standards.

- ON/OFF motor starters: 1-way rotation control of 3-phase motor
- Emergency stop (1)
- Electrical circuit isolation, lockable on LJ7K09 with up to 3 padlocks
- Short circuit protection
- Overload protection
- Protection against voltage drops for LJ7K09● For LJ7K06, a GVAX●● undervoltage trip may be added
- Possible signaling with GV2SN●● indicator (to be ordered separately). Switching back on power supply after tripping must be a deliberate action.

Range:
- 9 pre-equipped enclosed safety starters from 0.06 to 4 kW.

Enclosures characteristics:
- Conforming to IEC 60947-1, IEC 60204-1
- Degree of protection according IEC 60529: IP55, IK07
- Ambient air temperature in operation -5 to +40°C
- Operational voltage (Ue) 690 V
- Operating position: same that as contactors
- Material: polycarbonate (2).

Included:
- 1 GV2ME thermal magnetic circuit breaker with mushroom emergency stop (release on ¼ turn),
- 1 LC1K pre-wired contactor
- 2 Harmony XB5 pushbuttons
- 1 Integral transformer: 400/24 V, 25 VA
- 1 GVAX undervoltage release module (with LJ7K09).

Additional GVAX●● undervoltage release module for LJ7K06 - to be ordered separately.
Additional GV2SN●● indicator light – to be ordered separately.
- Terminal allowing the connection of a volt-free contact, if required, in the control circuit.

Non-reversing motor starters with integral transformer, pre-wired for operation on a 3-phase 380 to 400 V 50 Hz supply (with pushbutton control of isolator function)

Standard power ratings of 3-phase motors 50 Hz in category AC-3	Circuit breaker	Dust and damp protected starter	Weight	Overall dimensions (5) WxHxD
380/400 V	Setting range of thermal trips	Reference (3) (4)		
kW	A		kg	
0.06	0.16…0.25	**LJ7K06Q702**	2.270	175x165x177
0.09	0.25…0.40	**LJ7K06Q703**	2.270	175x165x177
0.25	0.63…1	**LJ7K06Q705**	2.270	175x165x177
0.55	1…1.6	**LJ7K06Q706**	2.270	175x165x177
0.75	1.6…2.5	**LJ7K06Q707**	2.270	175x165x177
1.5	2.5…4	**LJ7K06Q708**	2.270	175x165x177
2.2	4…6.3	**LJ7K06Q710**	2.270	175x165x177
4	6…10	**LJ7K09Q714**	2.270	175x165x146

Variants (pre-assembled) (4)

Description	Variants available for starter	Suffix to be added to the starter reference (6)
With Emergency Stop No control pushbuttons	LJ7K06Q705...K09Q714	**A04**
With padlocking facility (fitted as standard on LJ7 K09)	LJ7K06Q705...K06Q710	**A29**
Without circuit breaker (8) (or undervoltage release voltage)	LJ7	(7)
Without circuit breaker (8) With Emergency Stop No control pushbuttons	LJ7K09Q7	**A04**
Without circuit breaker (8) Without Emergency Stop (if the emergency stop is on the machine)	LJ7K09Q7	**A39**
Without circuit breaker (8) Without Emergency Stop No control pushbuttons	LJ7K09Q7	**A04A39**

(1) **LJ7K06***: the mushroom head type Emergency Stop acts mechanically on the circuit breaker.*
LJ7K09*: the Emergency Stop function is performed by an undervoltage trip* **GVAX385***, acting on the circuit breaker. This circuit breaker is always supplied pre-wired for use on 380/400 V 50 Hz.*

(2) Avoid placing this material in contact with harsh substances (detergents, chlorine solvents, ketones, alcohol, aromatic hydrocarbons).

(3) In the reference, the voltage code **Q7 (380/400 V) indicates the power supply voltage** *to which the starter will be connected, it being assumed that the contactor has a ∼ 24 V coil (see control circuit scheme).*

(4) Some combinations of variants / control voltage may not be available. Please consult us.

(5) Dimensions of standard versions, comprising (if any) handle, pushbutton, indicator light.

(6) Example: **LJ7K06Q705A04***.*

(7) Delete the last 2 digits of the selected starter reference. Example: **LJ7K06Q705** *becomes* **LJ7K06Q7***.*

(8) Circuit breaker to be ordered separately. References GV2ME: see chapter B6 “Circuit breakers”.

Dimensions:
page A1/54

Schemes:
page A1/55

Life Is On Schneider Electric

PB111698.eps



LG8K06

PB111699.eps



LG8K09

For Control + Isolation + Short circuit / Overload Protection

For OEM, the enclosed safety motor reverser starters comply with IEC 60204-1 “Safety of machinery” standards.

- ON/REVERSE/OFF motor starters: 2-way rotation control of 3-phase motor
- Emergency stop (1)
- Electrical circuit isolation, lockable on LG8K09 and LG8K12 with up to 3 padlocks
- Short circuit protection (switching back on power supply after tripping must be a deliberate action)
- Overload protection
- Protection against voltage drops for LG8K09, LG8K12. For LG8K06, a GVAX●● undervoltage trip may be added.
- Possible signaling with GV2SN●● indicator (to be ordered separately).

Range:
- 10 pre-equipped enclosed safety inverter starters from 0.06 to 5.5 kW.

Enclosures characteristics:
- Conforming to IEC 60947-1, IEC 60204-1 (1)
- Degree of protection according IEC 60529: IP55, IK07
- Ambient air temperature in operation -5 to +40°C
- Operational voltage (Ue) 690 V
- Operating position: same that as contactors
- Material: polycarbonate (2) .

Included:
- 2 LC1K prewired contactors
- 1 GV2ME thermal magnetic circuit breaker with mushroom emergency stop (release on ¼ turn)
- 1 “Stop” black pushbutton + 1 2-position spring return selector switch “I – II”
- 1 GVAX undervoltage release module with LG8K09, LG8K12 (to be ordered separately for LG8K06).

Reversing starters (with pushbutton control of isolation)

Standard power ratings of 3-phase motors 50-60 Hz in category AC-3			Circuit breaker	Dust & damp protected starter	Weight	Overall dimensions (4) WxHxD
220/ 230 V	400/ 415 V	440 V	Setting range of thermal trips	Basic reference, to be completed by adding the voltage code (3)		
kW	kW	kW	A		kg	
–	0.06	0.06	0.16…0.25	**LG8K06●●02**	1.640	175x165x177
0.06	0.09	0.12	0.25…0.40	**LG8K06●●03**	1.640	175x165x177
–	0.18	0.18	0.40…0.63	**LG8K06●●04**	1.640	175x165x177
0.12	0.25	0.25	0.63…1	**LG8K06●●05**	1.640	175x165x177
0.25	0.55	0.55	1…1.6	**LG8K06●●06**	1.640	175x165x177
0.37	0.75	1.1	1.6…2.5	**LG8K06●●07**	1.640	175x165x177
0.75	1.5	1.5	2.5…4	**LG8K06●●08**	1.640	175x165x177
1.1	2.2	3	4…6.3	**LG8K06●●10**	1.640	175x165x177
1.5	4	4	6…10	**LG8K09●●14**	1.640	175x165x177
3	5.5	5.5	9…14	**LG8K12●●16**	1.640	175x165x177

Voltage codes (3)			
Volts ∼ 50/60 Hz	220/ 230	380/ 400	400/ 415
	M7	Q7	N7

(1) **LG8K06***: the mushroom head type Emergency Stop acts mechanically on the circuit breaker.*
LG8K09, LG8K12*: the Emergency Stop function is performed by an undervoltage trip, acting on the circuit breaker.*
This circuit breaker is always supplied pre-wired for use on 380/400/415 V 50 Hz.
For a 60 Hz supply, please consult your Regional Sales Office.
(2) Avoid allowing the material to come into contact with strong bases (detergents, chlorine solvents, ketones, alcohol, aromatic hydrocarbons).
(3) Please check the availability of your variant in the index page A1/34. The SEARCH function of your viewer can be used.
(4) Dimensions of standard versions, comprising (if any) handle, pushbutton, indicator light.

Dimensions:
page A1/52

Schemes:
page A1/53

PB111898.eps



LJ8K06

PB111899.eps



LJ8K09

For Control + Isolation + Short circuit /Overload Protection, with isolated 24 V control circuit

For OEM, the enclosed safety motor reverser starters comply with IEC 60204-1 “Safety of machinery” standards.

- ON/REVERSE/OFF motor starters: 2-way rotation control of 3-phase motor
- Emergency stop (1)
- Electrical circuit isolation, lockable on LJ8K09 with up to 3 padlocks
- Short circuit protection (switching back on power supply after tripping must be a deliberate action)
- Overload protection
- Protection against voltage drops for LJ8K09. For LJ8K06, a GVAX●● undervoltage trip may be added
- Possible signaling with GV2SN●● indicator (to be ordered separately).

Range:
- 9 pre-equipped enclosed safety inverter starters from 0.06 to 4 kW.

Enclosures characteristics:
- Conforming to IEC 60947-1, IEC 60204-1
- Degree of protection according IEC 60529: IP55, IK07
- Ambient air temperature in operation -5 to +40°C
- Operational voltage (Ue) 690 V
- Operating position: same that as contactors
- Material: polycarbonate (2).

Included:
- 2 LC1K prewired contactors
- 1 GV2ME thermal magnetic circuit breaker with mushroom emergency stop (release on ¼ turn)
- 1 Integral transformer: 400/24 V, 25 VA
- 1 “Stop” black pushbutton + 1 2-position spring return selector switch “I – II”
- 1 GVAX undervoltage release module with LJ8K09 (to be ordered separately for LJ8K06).
- Terminal allowing the connection of a volt-free contact, if required, in the control circuit.

Reversing motor starters with integral transformer, pre-wired for operation on a 3-phase 380 to 400 V 50 Hz supply (with pushbutton control of isolator function)

Standard power ratings of 3-phase motors 50 Hz in category AC-3	Circuit breaker	Dust and damp protected starter	Weight	Overall dimensions (5)
	Setting range of thermal trips	Reference (3) (4)		WxHxD
380/400 V				
kW	A		kg	
0.06	0.16…0.25	**LJ8K06Q702**	2.650	175x165x177
0.18	0.40…0.63	**LJ8K06Q704**	2.650	175x165x177
0.25	0.63…1	**LJ8K06Q705**	2.650	175x165x177
0.55	1…1.6	**LJ8K06Q706**	2.650	175x165x177
0.75	1.6…2.5	**LJ8K06Q707**	2.650	175x165x177
1.5	2.5…4	**LJ8K06Q708**	2.650	175x165x177
2.2	4…6.3	**LJ8K06Q710**	2.650	175x165x177
4	6…10	**LJ8K09Q714**	2.650	175x165x146

Variants (pre-assembled) (4)

Description	Variants available for starter	Suffix to be added to the starter reference
Without circuit breaker (7) (or undervoltage release voltage)	LJ8	(6)

(1) **LJ8K06***: the mushroom head type Emergency Stop acts mechanically on the circuit breaker.* **LJ8K09***: the Emergency Stop function is performed by an undervoltage trip* **GVAX385***, acting on the circuit breaker. This circuit breaker is always supplied pre-wired for use on 380/400 V 50 Hz.*
(2) Avoid placing this material in contact with harsh substances (detergents, chlorine solvents, ketones, alcohol, aromatic hydrocarbons).
(3) In the reference, the voltage code **Q7 (380/400 V) indicates the power supply voltage** *to which the starter will be connected, it being assumed that the contactor has a ∿ 24 V coil (see control circuit scheme).*
(4) Please check the availability of your variant in the index page A1/34. The SEARCH function of your viewer can be used.
(5) Dimensions of standard versions, comprising (if any) handle, pushbutton, indicator light.
(6) Delete the last 2 digits of the selected starter reference. Example: **LJ8K09Q714** *becomes* **LJ8K09Q7**.
(7) Circuit breaker to be ordered separately. References GV2ME: see chapter B6 “Circuit breakers”.

Dimensions: page A1/54
Schemes: page A1/55

Product references

PB112215.eps



GV2MCK04

PB121673.tif



GV2ME●●

PB121677.eps



GVAX●●●

GV2MCK04 enclosure is fitted with a mushroom pushbutton.
It allows, with addition of a circuit breaker and undervoltage trip, the construction of a safety direct-on-line starter conforming INRS and VDE0113.

Enclosures characteristics:
- Conforming to IEC 60947-2; IEC 60947-4-1
- Degree of protection according IEC 60529: refer to selection chart
- Operational voltage (Ue) 690 V
- Material : polycarbonate (1).

Enclosure

Enclosure for thermal-magnetic circuit breakers GV2ME

Type	Degree of protection	Possible no. of side mounting auxiliary contact blocks on GV2ME		Reference	Weight	Overall dimensions WxHxD
		LH side	RH side		kg	
Surface mounting, double insulated with protective conductor. Sealable cover	IP55	1	1	**GV2MCK04**	0.420	93x147x145.5

GV2ME circuit beaker, GVAX undervoltage trip
Product references: page A1/32.

(1) Avoid placing this material in contact with harsh substances (detergents, chlorine solvents, ketones, alcohol, aromatic hydrocarbons).

Dimensions:
page A1/44

Schemes:
page A1/45

TeSys Control

Enclosures, components, for customer assemblies Spare parts

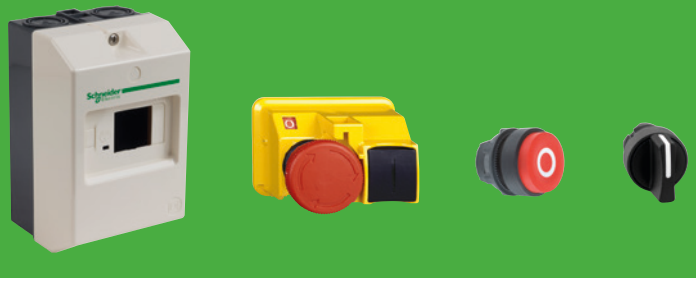

Product references

PB121229.eps



VCFXGE4

PB121230.eps



VBFXGE2

Empty enclosures with rotary handle

IP65 enclosure with red padlockable handle operator and yellow front plate
(for mounting a main or Emergency Stop switch-disconnector)

Ithe	For switch body	Nb. of possible add. module attachments	Reference (1)	Weight
A	A			kg
10…32	VN12, VN20 V02…V2	2	**VCFXGE1**	0.340
10…32	V02…V2	4	**VCFXGE4**	0.660
50…63	V3 - V4	3	**VCFXGE2**	0.660
100.... 140	V5 - V6	1	**VCFXGE6**	1.04

IP65 enclosure with black padlockable handle and black front plate
(for mounting a main switch-disconnector)

10…32	VN12, VN20 V02…V2	2	**VBFXGE1**	0.340
10…32	V02…V2	4	**VBFXGE4**	0.660
50…63	V3-V4	3	**VBFXGE2**	0.660
100.... 140	V5 - V6	1	**VBFXGE6**	1.04

Switch bodies to fit VCFX, VBFX enclosures (2)

Standard applications

Description	Rating	Reference	Weight
	A		kg
3-pole switch-disconnectors	10	**VN12**	0.110
	16	**VN20**	0.110

High performance applications

Description	Rating	Reference	Weight
	A		kg
3-pole switch-disconnectors	10	**V02**	0.200
	16	**V01**	0.200
	20	**V0**	0.200
	25	**V1**	0.200
	32	**V2**	0.200
	50	**V3**	0.500
	80	**V4**	0.500
	125	**V5**	0.900
	175	**V6**	0.900

PB121728.eps



V0

PB121232.eps



V4

(1) Enclosure not suitable in atmosphere contaminated with harsh substances (detergents, chlorine solvents, ketones, alcohol, aromatic hydrocarbons).
(2) For characteristics of switch-disconnectors, please consult your Regional Sales Office.

Dimensions:
page A1/38

Schemes:
page A1/39

Life Is On Schneider Electric

PB112286.eps



LE1GVMEK, LE1GVMEKA59

Empty enclosures with sealing device

Composition	Reference
Insulating enclosure with GV2E01 sealing device	**LE1GVMEK**
Insulating enclosure with GV2E01 sealing device, neutral terminal	**LE1GVMEKA59**

Direct-on-line starters characteristics

(based on LE1GVMEK enclosure + GV2ME circuit breaker + LC1K contactor assemblies)

Functions / range / specificities:
- ■ Circuit Isolation
- ■ Protection against short circuit
- ■ Motor protection: motor OFF in case of overload – manual reset with the black pushbutton.
- ■ ON/OFF motor control
- ■ Functions can be completed with optional components: remote control, signaling.

Enclosures characteristics:
- ■ Conforming to IEC 60947-4-1 standard
- ■ Degree of protection IP55 , according IEC 60529
- ■ Ambient air temperature in operation -5 to +40°C
- ■ Operating position: same as K series contactors
- ■ Material: polycarbonate (1).

■ 6 ratings of direct-on-line starters from 0.37 to 5.5 kW (400 V AC) can be realized, based the combinations of circuit breaker + contactor to be ordered separately:
- □ GV2ME thermal magnetic circuit breaker, of the required rating (see below)
- □ LC1K contactor, of the required rating (see below)
- □ optional accessories (indicating light, On pushbutton, sealing kit…).

PB121673.tif



GV2ME●●

Circuit breakers + contactors - Type 1 coordination (2)

Standard power ratings of 3-phase motors 50/60 Hz in AC-3			Setting range of thermal trips	Fixed magnetic current 13 Irth	For customer assembly	
400/ 415 V	440 V	500 V			Motor circuit breaker Reference	Contactor Reference to be completed with the coil voltage code (3)
kW	kW	kW	A	A		
0.37 0.55 -	0.37 0.55 -	0.37 0.55 0.75	1...1.6	22.5	**GV2ME06**	**LC1K0610●●**
0.75 -	0.75 1.1	- 1.1	1.6...2.5	33.5	**GV2ME07**	**LC1K0610●●**
1.1 1.5	- 1.5	1.5 2.2	2.5...4	51	**GV2ME08**	**LC1K0610●●**
2.2 -	2.2 3	- 3	4...6.3	78	**GV2ME10**	**LC1K0610●●**
3 4	- 4	4 5.5	6...10	138	**GV2ME14**	**LC1K0910●●**
5.5	5.5	7.5	9...14	170	**GV2ME16**	**LC1K1210●●**

PB123778.eps



LC1K0610●●

Coil voltage codes

Volts	24	110	220/230	230	230/240	380/400
∼ 50/60 Hz	B7	F7	M7	P7	U7	Q7
⎓	BW3	-	-	-	-	-

BW3 coil: low consumption (1.5 W), wide range (0.7...1.3 Uc) with integral suppression device as standard.

(1) Avoid placing this material in contact with harsh substances (detergents, chlorine solvents, ketones, alcohol, aromatic hydrocarbons).
(2) Extract from Coordination tables see chapter A6.
(3) Please check the availability of your variant in the index page A1/34. The SEARCH function of your viewer can be used.

Dimensions:
page A1/51

Schemes:
page A1/51

Product references

PB112264.eps



DE1DS1A04

PB112269.eps



DE1DS1A05

PB112259.eps



DE1DS1

PB112275.eps



DE1DS1A13

Empty enclosures for starters without isolating device

Head(s) mounted on cover	Designed for use with	Reference
Without	LE1D09 and D12	**DE1DS1A04**
	LE1D18...D35	**DE1DS2A04**
	LE2D09...D35	**DE1DS2A04**
1 flush blue head “R”	LE1D09 and D12	**DE1DS1A05**
	LE1D18...D35	**DE1DS2A05**
	LE2D09...D35	**DE1DS2A05**
1 flush green head “I” 1 projecting red head “O”	LE1D09 and D12	**DE1DS1**
	LE1D18...D35	**DE1DS2**
1 flush blue head “R” 1 switch with 2 fixed positions	LE1D09 and D12	**DE1DS1A13**
	LE1D18...D35	**DE1DS2A13**

Dimensions:
page A1/46

Product references

PB111891.eps



DE1KS217A06

PB111886.eps



DE1KS217A06A37

Empty enclosures for security starters

Designed for use with	Head(s) mounted on cover	Add-on blocks	Reference
LG7	Without		**DE1KS217A04**
	1 flush white head “I” 1 projecting black head “O”		**DE1KS217A06**
	1 flush white head “I” 1 projecting black head “O” 1 head emergency stop	Padlocking devices	**DE1KS217A06A37**

Dimensions:
page A1/52

Product references

PB111915.eps



GV2V01

PB112390.eps



GV2K011

PG113130.eps



GV2K021

8274.eps



GV2K031

PB112393.eps



GV2K04

PB121228.eps



GV2E01 – GV2E02

PB502236.eps

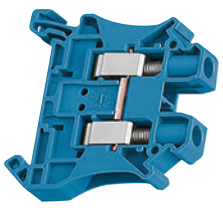

NSYTRV62BL

PB502246.eps

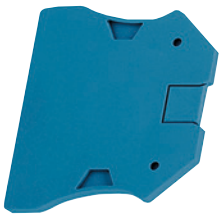

NSYTRAC22BL

PB112218.eps



GV2CP21

Accessories

Description			Sold in lots of	Unit reference	Weight kg
Padlocking device [6] for GV2ME operator (padlocking is only possible in the "O" position)		1 to 3 padlocks Ø 4 to 8 mm	1	**GV2V01**	0.075
Mushroom head pushbutton Ø 40 mm, red, IP55	Spring return [2]		1	**GV2K011**	0.052
	Emergency stop Latching [2]	Key release, key n° 455	1	**GV2K021**	0.160
		Turn to release	1	**GV2K031**	0.115
		Turn to release, padlockable	1	**GV2K04** [1]	0.120
Sealing kit	For enclosures and front plate	IP 55 for temperature between +5 °C and +40 °C	10	**GV2E01**	0.012
		IP 55 for temperature between -20 °C and +40 °C	10	**GV2E02**	0.012
Linergy passthrough neutral terminal block – 6 mm² 41 A single-level 1x1 screw			50	**NSYTRV62BL**	0.015
End cover for Linergy screw single-level terminal block			50	**NSYTRAC22BL**	0.003

*(1) Circuit breaker to be ordered separatly. Commercial references of **GV2ME01** to **M22**: see chapter B6 "Circuit breakers".*
*(2) Supplied with IP55 **GV2E01** sealing kit. To be fitted with enclosure **GV2M●01**.*
(3) Padlockable in "O" position using Ø 4 to 8 mm shank padlocks.

Separate front plate for GV2ME

Provides a sealing cover to GV2ME circuit breaker, on any kind of front panel.

Front plate			
Description		**Reference**	**Weight kg**
For direct control, through a panel, of a chassis mounted GV2ME	IP55	**GV2CP21**	0.800

Product references

PB121233.eps



ZB5AA331

PB121234.eps



ZB5AL432

PB121235.eps



DB403452.eps

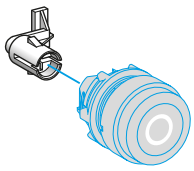

LAD9091

PF141168.eps



ZB5AD●

PB121236.eps



ZENL1111

PB121237.eps



DB403455.eps

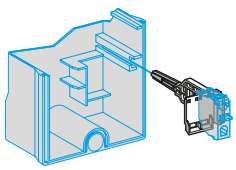

LAD90909

Heads for Start and Stop/Reset pushbuttons

Description	For use on	Unit reference
Flush, green “I” (1)	LE1, LE3, LE4, LE6 D09...D35	**ZB5AA331**
Projecting, red “O” (1)	LE●D09...D35	**ZB5AL432**
Adaptation kit for head ZB5AL432	LE1D09 and D12	**LAD9091**
	LE1D18...D35, LE2D09...D35	**LAD91810**
	LE3, LE4, LE6 and LE8 D09...D35	**LAD9T4**

Heads for Reset pushbuttons

Flush, blue “R” (2)	LE●D09...D35	**ZB5AA0**
		+ **ZBA639** (3)
Adaptation kit for head ZB5AA0 + ZBA639	LE1D09 and D12	**LAD9092**
	LE1D18...D35, LE2D09...D35	**LAD91810**
	LE3, LE6, LE4 and LE8D09...D35	**LAD9T4**

Heads for selector switches

3-position stay put	LE1D09...D35●●A09	**ZB5AD3**
2-position stay put	LE1D09...D35●●A13	**ZB5AD2**
3-position spring return to centre	LE2D09...D35 LE8D09...D35	**ZB5AD5**

Contact blocks

1 N/O spring return	LE●D09...D35	**ZENL1111**
1 N/C spring return	LE●D09...D35	**ZENL1121**
Mounting for contact block	LE1D09 and D12	**LAD90909**
	LE1D18...D35, LE2, LE3, LE4, LE6 and LE8D09...D35	**LAD91809**

(1) Remember to order adaptation kit LAD9091 or LAD91810 or LAD9T4, depending on size.
(2) Remember to order adaptation kit LAD9092 or LAD91810 or LAD9T4, depending on size.
(3) Sold in lots of 10.

Product references

PB121673.tif



GV2ME●●

Thermal magnetic circuit breakers, with screw clamp terminals

GV2ME with pushbutton control

Standard power ratings of 3-phase motors 50/60 Hz in category AC-3									Setting range of thermal trips (2)	Magnetic tripping current Id ± 20 %	Reference
400/415 V			500 V			690 V					
P	Icu	Ics (1)	P	Icu	Ics (1)	P	Icu	Ics (1)			
kW	kA	%	kW	kA	%	kW	kA	%	A	A	
–	–	–	–	–	–	**–**	–	–	0.1…0.16	1.5	**GV2ME01**
0.06	★	★	–	–	–	–	–	–	0.16…0.25	2.4	**GV2ME02**
0.09	★	★	–	–	–	–	–	–	0.25…0.40	5	**GV2ME03**
0.12	★	★	–	–	–	**0.37**	★	★	0.40…0.63	8	**GV2ME04**
0.18	★	★	–	–	–	**–**	–	–			
0.25	★	★	–	–	–	**0.55**	★	★	0.63…1	13	**GV2ME05**
0.37	★	★	**0.37**	★	★	**–**	–	–	1…1.6	22.5	**GV2ME06**
0.55	★	★	**0.55**	★	★	**0.75**	★	★			
–	–	–	**0.75**	★	★	**1.1**	★	★			
0.75	★	★	**1.1**	★	★	**1.5**	3	75	1.6…2.5	33.5	**GV2ME07**
1.1	★	★	**1.5**	★	★	**2.2**	3	75	2.5…4	51	**GV2ME08**
1.5	★	★	**2.2**	★	★	**3**	3	75			
2.2	★	★	**3**	50	100	**4**	3	75	4…6.3	78	**GV2ME10**
3	★	★	**4**	10	100	**5.5**	3	75	6…10	138	**GV2ME14**
4	★	★	**5.5**	10	100	**7.5**	3	75			
5.5	15	50	**7.5**	6	75	**9**	3	75	9…14	170	**GV2ME16**
–	–	–	**–**	–	–	**11**	3	75			
7.5	15	50	**9**	6	75	**15**	3	75	13…18	223	**GV2ME20**
9	15	40	**11**	4	75	**18.5**	3	75	17…23	327	**GV2ME21**
11	15	40	**15**	4	75	**–**	–	–	20…25	327	**GV2ME22** (3)

GV2ME technical characteristics: see in chapter B6.

Undervoltage trip, INRS (can only be mounted on GV2ME)
Safety device for dangerous machines conforming to INRS and VDE0113

PB121677.eps



GVAX●●●

Side (1 block on RH side of circuit breaker GV2 ME)	110…115 V	50 Hz	**GVAX115**
		60 Hz	**GVAX116**
	127 V	60 Hz	**GVAX115**
	220…240 V	50 Hz	**GVAX225**
		60 Hz	**GVAX226**
	380…400 V	50 Hz	**GVAX385**
		60 Hz	**GVAX386**
	415…440 V	50 Hz	**GVAX415**
	440 V	60 Hz	**GVAX385**

GVAX technical characteristics: see in chapter B6.

(1) As % of Icu.
(2) The thermal trip setting must be within the range marked on the graduated knob.
*(3) Maximum rating which can be mounted in enclosures **GV2MC** or **MP**, please consult your Regional Sales Office.*
★ > 100 kA.

PB123794.tif



LR2K●●

Thermal overload relays - selection table

LR2K thermal overload relays can be mounted on all 3P LC1K contactors with screw clamp connectors.

Class 10 A (the standard specifies a tripping time of between 2 and 10 seconds at 7.2 In)				
Relay setting range	**Fuses to be used with selected relay Maximum rating Type**			**Reference**
	aM	**gG**	**BS88**	
A	**A**	**A**	**A**	
0.11…0.16	0.25	0.5	–	**LR2K0301**
0.16…0.23	0.25	0.5	–	**LR2K0302**
0.23…0.36	0.5	1	–	**LR2K0303**
0.36…0.54	1	1.6	–	**LR2K0304**
0.54…0.8	1	2	–	**LR2K0305**
0.8…1.2	2	4	6	**LR2K0306**
1.2…1.8	2	6	6	**LR2K0307**
1.8…2.6	4	8	10	**LR2K0308**
2.6…3.7	4	10	16	**LR2K0310**
3.7…5.5	6	16	16	**LR2K0312**
5.5…8	8	20	20	**LR2K0314**
8…11.5	10	25	20	**LR2K0316**
10…14	16	32	25	**LR2K0321**
12…16	20	40	32	**LR2K0322**

LRD thermal overload relays can only be mounted on LC1D contactors of same size ratio and with screw clamp connectors.

PB121670.tif



LRD●●

Relay setting range (A)	Fuses to be used with selected relay			For use with contactor LC1	Reference
	aM (A)	**gG (A)**	**BS88 (A)**		
Class 10 A (1) for connection by screw clamp terminals or connectors					
0.10…0.16	0.25	2	–	D09…D38	**LRD01**
0.16…0.25	0.5	2	–	D09…D38	**LRD02**
0.25…0.40	1	2	–	D09…D38	**LRD03**
0.40…0.63	1	2	–	D09…D38	**LRD04**
0.63…1	2	4	–	D09…D38	**LRD05**
1…1.6	2	4	6	D09…D38	**LRD06**
1.6…2.5	4	6	10	D09…D38	**LRD07**
2.5…4	6	10	16	D09…D38	**LRD08**
4…6	8	16	16	D09…D38	**LRD10**
5.5…8	12	20	20	D09…D38	**LRD12**
7…10	12	20	20	D09…D38	**LRD14**
9…13	16	25	25	D12…D38	**LRD16**
12…18	20	35	32	D18…D38	**LRD21**
16…24	25	50	50	D25…D38	**LRD22**
23…32	40	63	63	D25…D38	**LRD32**
30…38	40	80	80	D32 and D38	**LRD35**

Product references

DE1DS1
DE1DS1A04
DE1DS1A05
DE1DS1A13
DE1DS2
DE1DS2A04
DE1DS2A05
DE1DS2A13
DE1KS217A04
DE1KS217A06
DE1KS217A06A29
DE1KS217A06A37
DE1KS217A29
DE1KS217A29A37
DE1KS217A37
DE2DS2
DK1FB005
GC2530M5D
GV2CP21
GV2E01
GV2E02
GV2E03
GV2K011
GV2K021
GV2K031
GV2K04
GV2MC01
GV2MC02
GV2MC03
GV2MCK04
GV2ME01
GV2ME02
GV2ME03
GV2ME04
GV2ME05
GV2ME06
GV2ME07
GV2ME08
GV2ME10
GV2ME14
GV2ME16
GV2ME20
GV2ME21
GV2ME22
GV2MP01
GV2MP02
GV2MP03
GV2MP04
GV2PC01
GV2PC02
GV2SN23
GV2SN24
GV2SN33
GV2SN34
GV2V01
GV3PC01
GV3PC02
GVAX115
GVAX116
GVAX225
GVAX226
GVAX385
GVAX386
GVAX415
KAD1PZ
KCC1Y
KZ101
KZ103
KZ106
KZ13
KZ14
KZ15
KZ16
KZ18
KZ20
KZ21
KZ27
KZ28
KZ30
KZ50
KZ52
KZ62
KZ65
KZ66
KZ67
KZ77
KZ93
LAD90909
LAD9091
LAD9092
LAD91809
LAD91810
LAD9T4
LC1KV7A80
LE1D09B7
LE1D09E7
LE1D09F7
LE1D09M7
LE1D09M7A04
LE1D09M7A13
LE1D09N7
LE1D09N7A04
LE1D09P7
LE1D09P7A04
LE1D09P7A05
LE1D09P7A09
LE1D09P7A13
LE1D09P7A13T
LE1D09P7A95
LE1D09P7T
LE1D09Q7
LE1D09Q7A04
LE1D09Q7A05
LE1D09Q7A13
LE1D09R7
LE1D09U7
LE1D09U7A13
LE1D09V7
LE1D09V7A04
LE1D09V7A09
LE1D09V7A13
LE1D12E7
LE1D12F7
LE1D12M7
LE1D12M7A04
LE1D12M7A09
LE1D12N7
LE1D12P7
LE1D12P7A04
LE1D12P7A05
LE1D12P7A13
LE1D12Q7
LE1D12R7
LE1D12U7
LE1D12U7A09
LE1D12V7
LE1D12V7A04
LE1D12V7A05
LE1D12V7A09
LE1D12V7A13
LE1D18E7
LE1D18F7
LE1D18M7
LE1D18N7
LE1D18N7A04
LE1D18P7
LE1D18P7A04
LE1D18P7A05
LE1D18P7A13
LE1D18Q7
LE1D18Q7A09
LE1D18R7
LE1D18U7
LE1D18V7
LE1D18V7A04
LE1D18V7A05
LE1D18V7A13
LE1D25B7
LE1D25F7
LE1D25M7
LE1D25M7A09
LE1D25N7
LE1D25P7
LE1D25P7A04
LE1D25P7A05
LE1D25P7A13
LE1D25Q7
LE1D25Q7A09
LE1D25R7
LE1D25U7
LE1D25V7
LE1D25V7A04
LE1D25V7A13
LE1D35B7
LE1D35E7
LE1D35F7
LE1D35M7
LE1D35N7
LE1D35P7
LE1D35P7A04
LE1D35P7A05
LE1D35Q7
LE1D35R7
LE1D35U7
LE1D35V7
LE1D40AFE7
LE1D40AP7
LE1D40AQ7
LE1D50AFE7
LE1D50AP7
LE1D50AP7A04
LE1D50AQ7
LE1D65AP7
LE1D65AP7A04
LE1D65AQ7
LE1GVMEK
LE1GVMEKA59
LE1M35B705
LE1M35B706
LE1M35B707
LE1M35B710
LE1M35B712
LE1M35B714
LE1M35B716
LE1M35F710
LE1M35M7
LE1M35M705
LE1M35M706
LE1M35M707
LE1M35M708
LE1M35M710
LE1M35M712
LE1M35M714
LE1M35M716
LE1M35M721
LE1M35M722
LE1M35N705
LE1M35N706
LE1M35N707
LE1M35N708
LE1M35N710
LE1M35N712
LE1M35N714
LE1M35N716
LE1M35N721
LE1M35N722
LE1M35P7
LE1M35P705
LE1M35P706
LE1M35P707
LE1M35P708
LE1M35P710
LE1M35P712
LE1M35P714
LE1M35P716
LE1M35P721
LE1M35P722
LE1M35Q7
LE1M35Q705
LE1M35Q706
LE1M35Q707
LE1M35Q708
LE1M35Q710
LE1M35Q712
LE1M35Q714
LE1M35Q716
LE1M35Q721
LE1M35Q722
LE1M35R705
LE1M35R706
LE1M35R708
LE1M35R710
LE1M35R714
LE1M35R716
LE1M35R721
LE1M35R722
LE1M35U706
LE1M35U707
LE1M35U708
LE1M35U710
LE1M35U712
LE1M35U714
LE1M35U716
LE1M35U721
LE1M35U722
LE1M35V7
LE1M35V706
LE1M35V707
LE1M35V708
LE1M35V710
LE1M35V712
LE1M35V714
LE1M35V716
LE1M35V721
LE1M35V722
LE2D09M7
LE2D09N7
LE2D09P7
LE2D09Q7
LE2D09U7
LE2D09V7
LE2D12B7
LE2D12N7
LE2D12Q7
LE2D12U7
LE2D12V7
LE2D18M7
LE2D18N7

This document is current. Click on the product reference to get the most recent availability status (hyperlink to **se.com** product datasheet).
If your product variant is no longer available, please consult your distributor or regional sales office.

Product references

LE2D18P7
LE2D18V7
LE2D25M7
LE2D25N7
LE2D25P7
LE2D25V7
LE2D35P7
LE2D35V7
LE2D40AP7
LE2D40AQ7
LE2D65AQ7
LE2K064N7
LE2K065M7
LE2K065P7
LE2K065Q7
LE2K065U7
LE2K065V7
LE2K095U7
LE2K095V7
LE3D09B7
LE3D09N7
LE3D09P7
LE3D09P7A04
LE3D09Q7
LE3D09V7
LE3D09V7A04
LE3D12B7
LE3D12M7
LE3D12N7
LE3D12P7
LE3D12P7A04
LE3D12Q7
LE3D12U7
LE3D12V7
LE3D18B7
LE3D18M7
LE3D18N7
LE3D18P7
LE3D18P7A04
LE3D18Q7
LE3D18U7
LE3D18V7
LE3D35M7
LE3D35N7
LE3D35P7
LE3D35Q7
LE3D35U7
LE3D35V7
LE4D09B7
LE4D09M7
LE4D09P7
LE4D09P7A04
LE4D09P7A05
LE4D09Q7
LE4D09R7
LE4D09U7A05
LE4D09V7
LE4D09V7A04
LE4D12B7
LE4D12E7
LE4D12F7
LE4D12M7
LE4D12N7
LE4D12P7
LE4D12P7A04
LE4D12P7A05
LE4D12Q7
LE4D12V7
LE4D12V7A04
LE4D12V7A05
LE4D18B7
LE4D18F7
LE4D18M7
LE4D18N7
LE4D18P7
LE4D18Q7
LE4D18U7
LE4D18V7
LE4D18V7A05
LE4D25B7
LE4D25F7
LE4D25M7
LE4D25N7
LE4D25P7
LE4D25P7A05
LE4D25Q7
LE4D25V7
LE4D35B7
LE4D35M7
LE4D35N7
LE4D35P7
LE4D35U7
LE4D35V7
LE4K065P7
LE4K065V7
LE6D09B7
LE6D12B7
LE6D12P7
LE6D12V7
LE6D18B7
LE6D18P7
LE6D18V7
LE8D09V7
LE8D12P7
LE8D12Q7
LE8D12V7
LE8D18V7
LE8D25V7
LE8D35V7
LE8K065P7
LG1D122M716
LG1D122P716
LG1D122Q7
LG1D122Q716
LG1D182M720
LG1D182M721
LG1D182N720
LG1D182Q7
LG1D182Q720
LG1K065M703
LG1K065M705
LG1K065M705A37
LG1K065M706
LG1K065M707
LG1K065M707A37
LG1K065M708
LG1K065M710
LG1K065M710A37
LG1K065N705
LG1K065N706
LG1K065N708
LG1K065N710
LG1K065P703
LG1K065P707
LG1K065P708
LG1K065P710
LG1K065Q7
LG1K065Q702
LG1K065Q703
LG1K065Q704
LG1K065Q705
LG1K065Q706
LG1K065Q706A37
LG1K065Q707
LG1K065Q707A37
LG1K065Q708
LG1K065Q708A37
LG1K065Q710
LG1K065Q710A37
LG1K065V702
LG1K065V704
LG1K065V706
LG1K065V710
LG1K095M7
LG1K095M714
LG1K095M714A37
LG1K095N714
LG1K095P714
LG1K095Q7
LG1K095Q714
LG1K095Q714A37
LG7D12B716
LG7D12M7
LG7D12M716
LG7D12N716
LG7D12P716
LG7D12Q716
LG7D12V716
LG7D18B720
LG7D18B721
LG7D18M7
LG7D18M720
LG7D18M721
LG7D18P720
LG7D18Q7
LG7D18Q720
LG7D18Q721
LG7D18V720
LG7K06B703
LG7K06B704
LG7K06B706
LG7K06B707
LG7K06B710
LG7K06B710A04
LG7K06M7
LG7K06M702
LG7K06M703
LG7K06M704
LG7K06M705
LG7K06M705A04
LG7K06M705A29
LG7K06M706
LG7K06M707
LG7K06M707A04
LG7K06M707A39
LG7K06M708
LG7K06M708A04
LG7K06M708A29
LG7K06M710
LG7K06M710A04
LG7K06M710A29
LG7K06N704
LG7K06N705
LG7K06N706
LG7K06N707
LG7K06N710
LG7K06P704
LG7K06P708
LG7K06P710
LG7K06Q7
LG7K06Q702
LG7K06Q704
LG7K06Q705
LG7K06Q706
LG7K06Q706A29
LG7K06Q707
LG7K06Q707A29
LG7K06Q708
LG7K06Q708A29
LG7K06Q710
LG7K06Q710A29
LG7K06V707
LG7K06V708
LG7K06V710
LG7K09M7
LG7K09M714
LG7K09M714A04
LG7K09N714
LG7K09P714
LG7K09Q714
LG7K09V714
LG8K06B707
LG8K06M7
LG8K06M702
LG8K06M704
LG8K06M705
LG8K06M706
LG8K06M707
LG8K06M710
LG8K06N705
LG8K06N706
LG8K06N707
LG8K06Q7
LG8K06Q702
LG8K06Q703
LG8K06Q704
LG8K06Q705
LG8K06Q706
LG8K06Q707
LG8K06Q707A14
LG8K06Q708
LG8K06Q708A39
LG8K06Q710
LG8K09M7
LG8K09M714
LG8K09N714
LG8K09Q714
LG8K12Q716
LJ7K06Q7
LJ7K06Q702
LJ7K06Q703
LJ7K06Q705
LJ7K06Q705A04
LJ7K06Q705A29
LJ7K06Q706
LJ7K06Q706A04
LJ7K06Q707
LJ7K06Q707A04
LJ7K06Q707A29
LJ7K06Q708
LJ7K06Q708A04
LJ7K06Q708A29
LJ7K06Q710
LJ7K06Q710A04
LJ7K09Q7
LJ7K09Q714

This document is current. Click on the product reference to get the most recent availability status (hyperlink to **se.com** product datasheet).
If your product variant is no longer available, please consult your distributor or regional sales office.

Product references

LJ7K09Q714A04	V6	VCD0	VVE4
LJ7K09Q7A04A39	VBD0	VCD01	VZ0
LJ8K06Q702	VBD01	VCD02	VZ01
LJ8K06Q704	VBD02	VCD1	VZ02
LJ8K06Q705	VBD1	VCD2	VZ1
LJ8K06Q706	VBD2	VCDN12	VZ10
LJ8K06Q707	VBDN12	VCDN20	VZ11
LJ8K06Q707A04	VBDN20	VCF0	VZ12
LJ8K06Q708	VBF0	VCF01	VZ13
LJ8K06Q710	VBF01	VCF01GE	VZ14
LJ8K09Q7	VBF01GE	VCF01GEGP	VZ15
LJ8K09Q714	VBF02	VCF02	VZ16
LR2K0301	VBF02GE	VCF02GE	VZ17
LR2K0302	VBF0GE	VCF02GEGP	VZ17L127
LR2K0303	VBF1	VCF0GE	VZ17L69
LR2K0304	VBF1GE	VCF0GEGP	VZ18
LR2K0305	VBF2	VCF1	VZ2
LR2K0306	VBF2GE	VCF1GE	VZ20
LR2K0307	VBF3	VCF1GEGP	VZ26
LR2K0308	VBF3GE	VCF1YZ	VZ27
LR2K0310	VBF4	VCF2	VZ28
LR2K0312	VBF4GE	VCF2GE	VZ29
LR2K0314	VBF5	VCF3	VZ3
LR2K0316	VBF5GEN	VCF3GE	VZ30
LR2K0321	VBF6	VCF4	VZ31
LR2K0322	VBF6GEN	VCF4GE	VZ4
LRD01	VBFXGE1	VCF5	VZ45
LRD02	VBFXGE2	VCF5GEN	VZ7
LRD03	VBFXGE4	VCF6	VZ8
LRD04	VBFXGE6	VCF6GEN	VZ9
LRD05	VC1GUN	VCFN12GE	VZN05
LRD06	VC2GUN	VCFN20GE	VZN06
LRD07	VC3GUN	VCFN25GE	VZN08
LRD08	VC4GUN	VCFN32GE	VZN11
LRD10	VC5GUN	VCFN40GE	VZN12
LRD12	VC6GUN	VCFXGE1	VZN14
LRD14	VCCD0	VCFXGE2	VZN17
LRD16	VCCD01	VCFXGE4	VZN19
LRD21	VCCD02	VCFXGE6	VZN20
LRD22	VCCD1	VGP1	VZN26
LRD32	VCCD2	VGPCLIP1	VZN30
LRD35	VCCDN12	VN12	Z01
NSYTRAC22BL	VCCDN20	VN20	ZB5AA331
NSYTRV62BL	VCCF0	VVD0	ZB5AD2
V0	VCCF01	VVD1	ZB5AD3
V01	VCCF02	VVD2	ZB5AD5
V02	VCCF1	VVD3	ZB5AL432
V1	VCCF2	VVD4	ZENL1111
V2	VCCF3	VVE0	ZENL1121
V3	VCCF4	VVE1	
V4	VCCF5	VVE2	
V5	VCCF6	VVE3	

This document is current. Click on the product reference to get the most recent availability status (hyperlink to **se.com** product datasheet). If your product variant is no longer available, please consult your distributor or regional sales office.

Enclosed starters

Technical Data for Designers

Contents

Switch-disconnectors ..... A1/38 to A1/40
Direct-on-line starters ..... A1/41, A1/43 to A1/49
.....and A1/51
Star-delta starters ..... A1/42 and A1/50
Starters for safety applications ..... A1/52 to A1/55

Dimensions

VCFN12GE to VCFN40GE

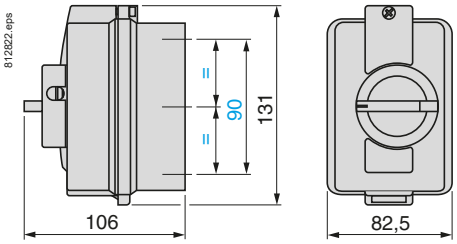

Cable glands: 2x ISO 20 top and bottom, 2x ISO 16 rear.

VCF or VBF02GE to 4GE, VCF••GEGP and VCF•GEGP, VCFX or VBFXGE1 to GE4

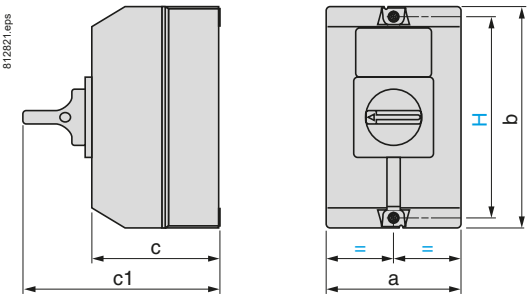

	a	b	c	c1	H
V•F02GE to V•F2GE, V•FXGE1 VCF••GEGP and VCF•GEGP (1)	90	146	85	131	130
V•F3GE and **V•F4GE** (2)	157	180	107	152	164
V•FXGE2 and **V•FXGE4** (2)	157	180	107	152	164

(1) Cable glands: 2x ISO 16 rear, 4x ISO 20/25 top and bottom.
(2) Cable glands: 4x ISO 25/32 rear, 4x ISO 25/32 top and bottom.

VCF or VBF5GEN and 6GEN

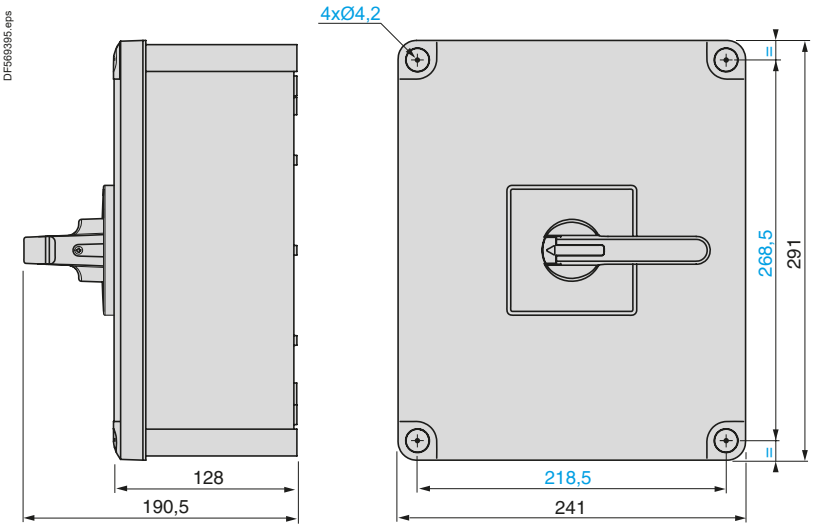

References:
pages A1/3 and A1/26
Schemes:
page A1/39

Schemes

Schemes

Switch-disconnectors

Enclosed or switch bodies	Main pole module	Neutral pole module
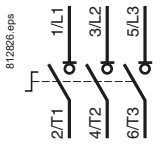		

Auxiliary contact blocks

VZ7	VZ20	VZN05	VZN06
			

References:
pages A1/3 and A1/26

Dimensions:
page A1/38

Dimensions, schemes

Dimensions

VC1GUN and VC2GUN

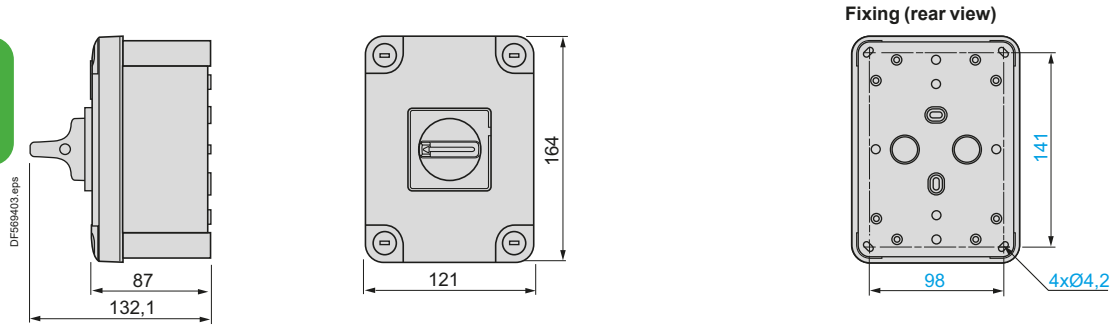

VC3GUN and VC4GUN

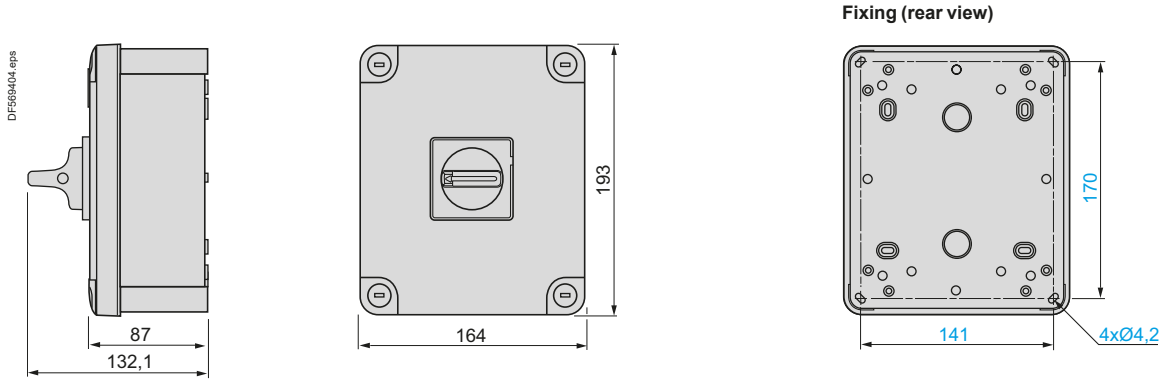

VC5GUN and VC6GUN

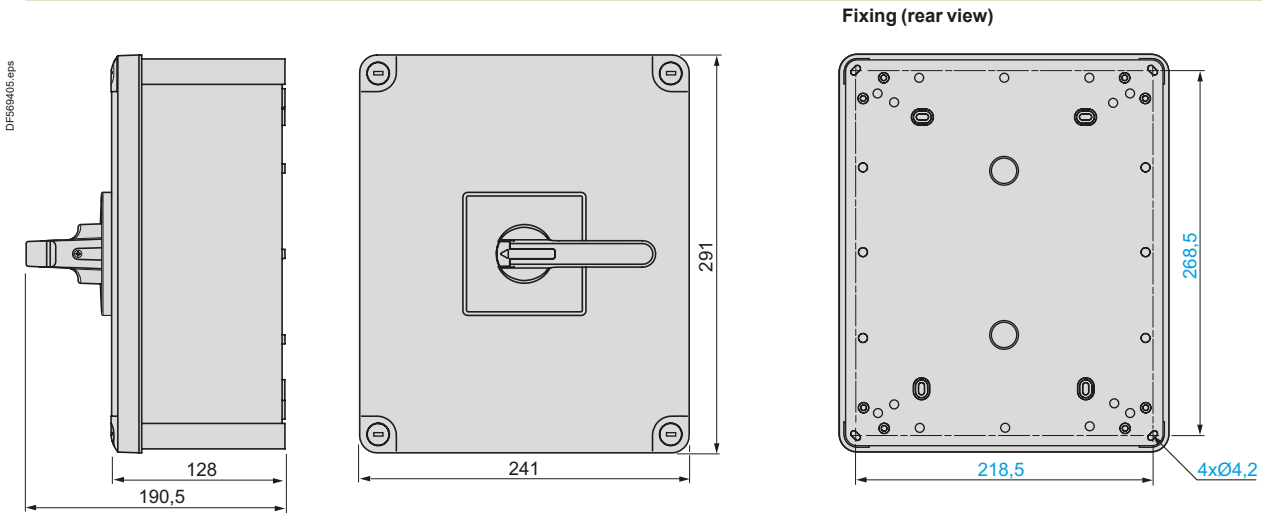

Schemes

Switch-disconnectors

Enclosed switch-disconnectors or switch bodies

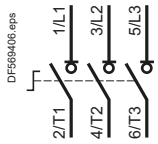

Main pole module



Neutral pole module



Auxiliary contact block modules

VZ7



VZ20



References:
page A1/4

Dimensions, schemes

Dimensions

LE1M35 (1)

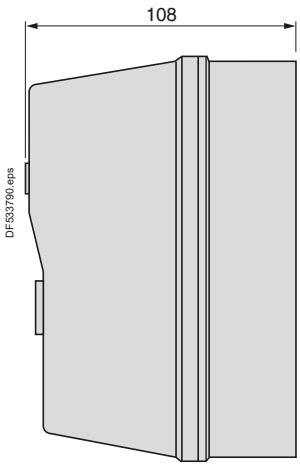

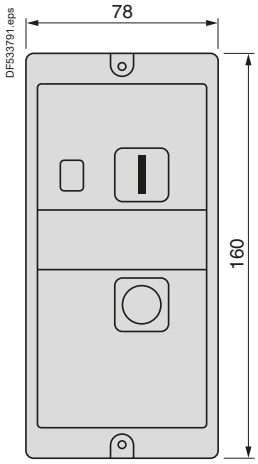

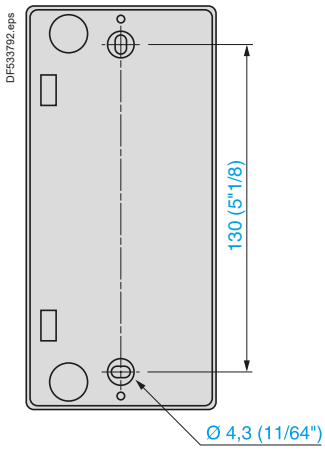

Knock-outs or blanking plugs for cable glands				
Enclosure type	**At top**		**At bottom**	
	PG	**ISO**	**PG**	**ISO**
LE1 M	2 x 13 to 2 x 21	2 x 20 or 2 x 25	2 x 13 to 2 x 21	2 x 20 or 2 x 25

(1) Can be mounted on machine panel or frame. Knock-outs for 4 x 13 P cable glands.

Schemes

LE1M35

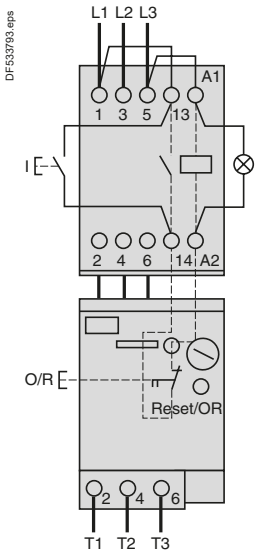

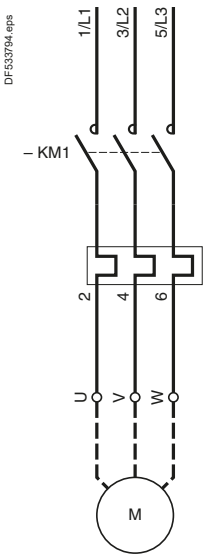

Choice of type of control built into the product

Control by latching pushbuttons

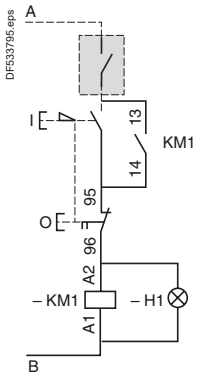

Control by spring return pushbuttons

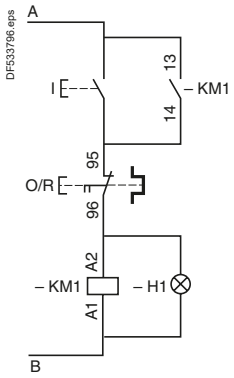

Connections

Power voltage	Control circuit voltage	A	B
380 V, 400 V, 415 V, 440 V	220 V, 230 V, 240 V	L3	Neutral
	380 V, 400 V, 415 V, 440 V	L3	L1
	Other voltages	For customer assembly	
Other voltages	All voltages (440 V max)	For customer assembly	

References:
page A1/7

Dimensions, schemes

Dimensions

LE6D09…D18

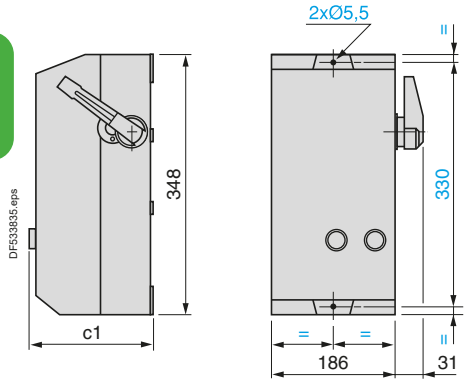

	c1
Standard version	175.5
Variant A04	167
Variant A05	175.5

Knock-outs or blanking plugs for cable glands

Type of enclosure	At top		At bottom	
	PG	ISO	PG	ISO
LE6D09…D18	–	2 x 20 or 2 x 25 or 2 x 32 or 2 x 40	–	2 x 20 or 2 x 25 or 2 x 32 or 2 x 40

Ref.

Schemes

LE6D09…D18

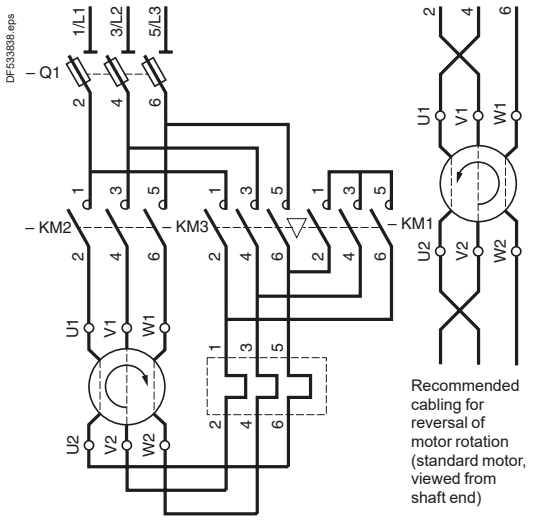

Recommended cabling for reversal of motor rotation (standard motor, viewed from shaft end)

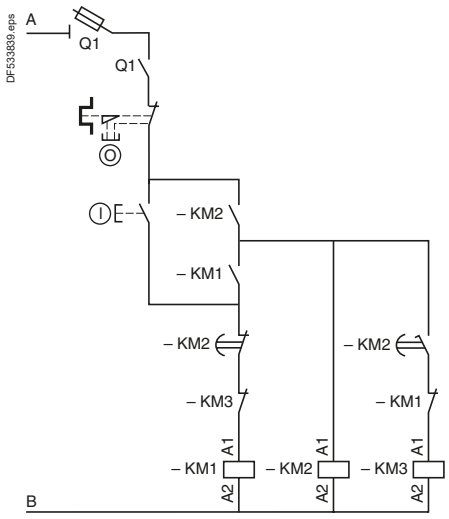

Connections

Power voltage	Control circuit voltage	A	B
380 V, 400 V, 415 V, 440 V	220 V, 230 V, 240 V	L3	Neutral terminal
	380 V, 400 V, 415 V, 440 V	L3	L1
	Other voltages	Terminal 1	Terminal 2
Other voltages	All voltages (600 V max)	For customer assembly	

References:
page A1/16

Dimensions, schemes

Dimensions

GV2PC●●

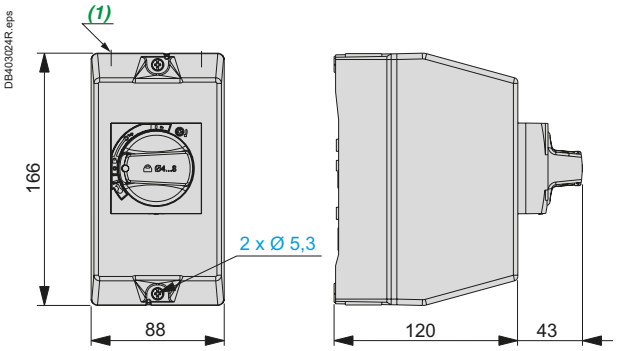

(1) Top face: 2 knock-outs for ISO20 cable glands.
Bottom face: 2 knock-outs for ISO20 cable glands.

GV3PC●●

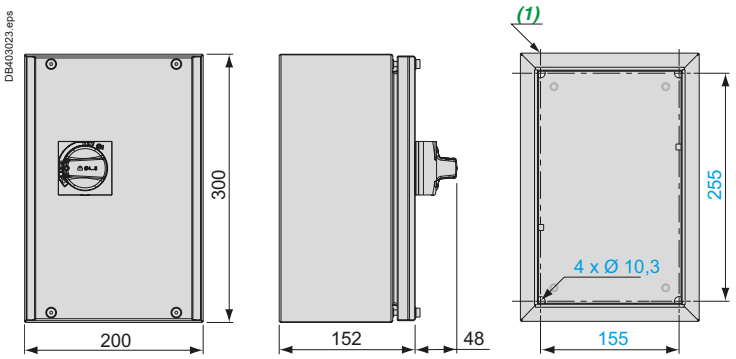

(1) Top face: 1 blanking plug for ISO32 cable gland.
Bottom face: 2 blanking plugs for ISO32 cable gland + 1 blanking plug for ISO20 cable gland.

Schemes

GV2L

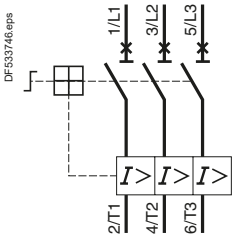

GV2P

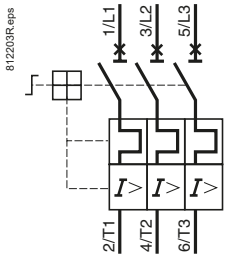

GV3L

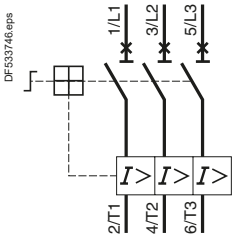

GV3P

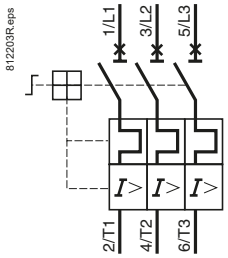

References:
pages A1/9 to A1/10

Dimensions, mounting

Dimensions

Surface mounting enclosure GV2MC0●

DF523443.eps

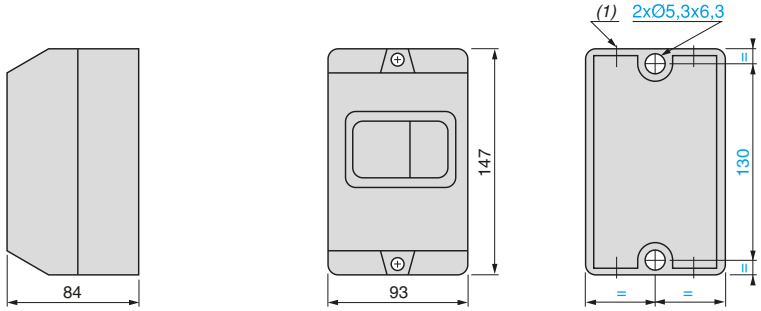

(1) Top face: 2 knock-outs for ISO20/25 cable glands or Pg16 or 16mm conduits.
Bottom face: 2 knock-outs for ISO20/25 cable glands or Pg16 or 16mm conduits.

Surface mounting enclosure GV2MCK04

DF523444.eps

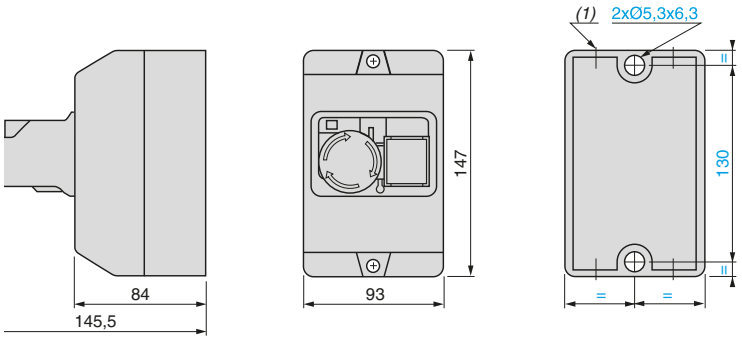

(1) Top face: 2 knock-outs for ISO20/25 cable glands or Pg16 or 16mm conduits.
Bottom face: 2 knock-outs for ISO20/25 cable glands or Pg16 or 16mm conduits.

Mounting

Flush mounting enclosures GV2MP0● (panel cut-out)

GV2MP0●

DF523445.eps

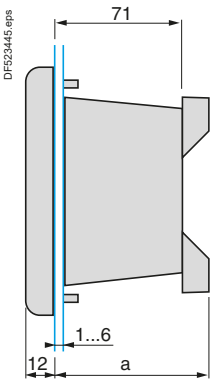

GV2MP01, MP02

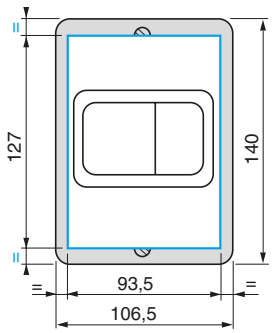

GV2MP03, MP04

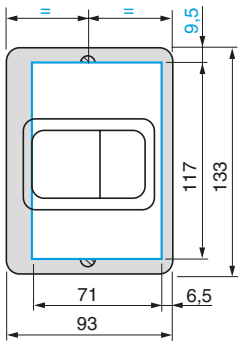

Front plate GV2CP21

812202.eps

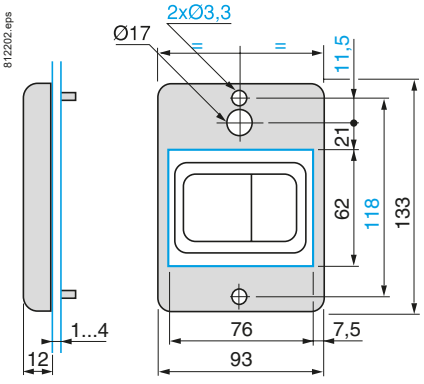

GV2	a
MP01, MP02	–
MP03, MP04	86

References:
pages A1/11 and A1/23

Schemes:
page A1/45

Life Is On Schneider Electric

Schemes

Schemes

GV2ME●●

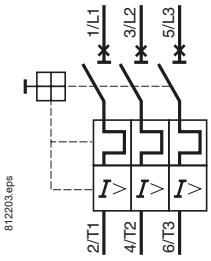

Instantaneous auxiliary contacts

GVAE1

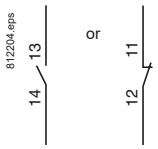

GVAE11

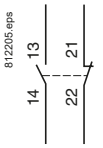

GVAE20

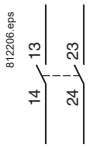

Instantaneous auxiliary contacts and fault signalling contacts

GVAD0110

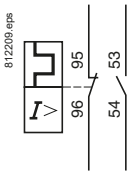

GVAD0101

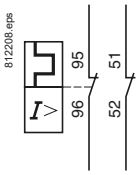

GVAD1010

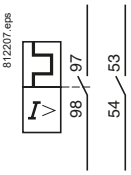

GVAD1001

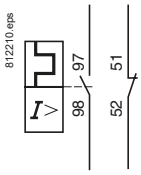

Instantaneous auxiliary contacts

GVAN11

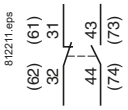

GVAN20

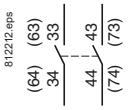

Short-circuit signalling contacts

GVAM11

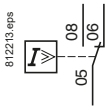

Undervoltage trips

GVAU●●●

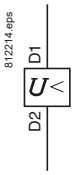

GVAS●●●

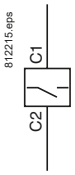

GVAX●●●

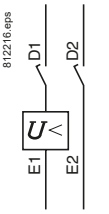

Wiring diagram for undervoltage trip used on potentially dangerous machines, conforming to INRS

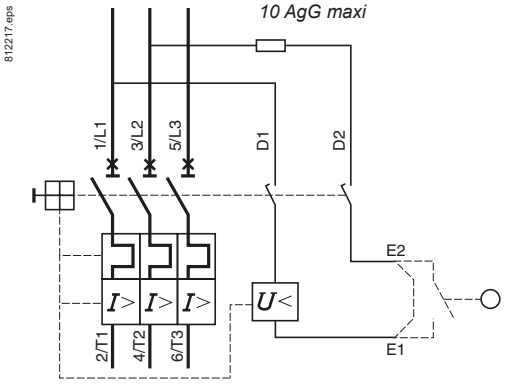

References:
pages A1/11 and A1/23

Dimensions:
page A1/44

Dimensions

Dimensions

LE1D09 and D12

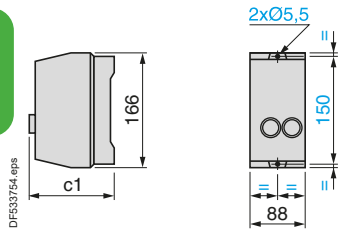

	c1
Standard version	128.5
Variant A04	120
Variant A05	128.5
Variant A09	120
Variant A13	120

LE1D09●●T
LE1D18…D35 and LE2D09…D35

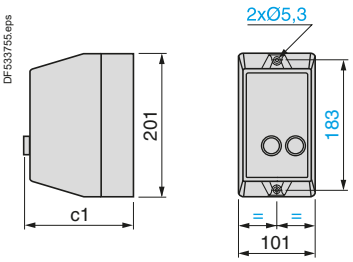

	c1	
	LE1D	LE2D
Standard version	153.5	160
Variant A04	145	145
Variant A05	153.5	153.5
Variant A09	160	–
Variant A13	160	–

LE1D40A…D65A
LE2D40A…D65A

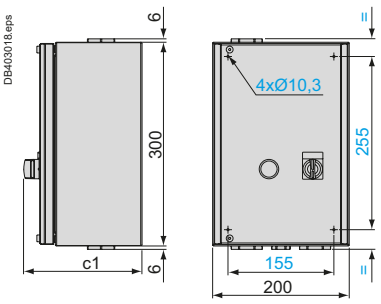

	c1	
	LE1D	LE2D
Standard version	158.5	174
Variant A04	150	150
Variant A05	158.5	158.5

LE2K06 and K09

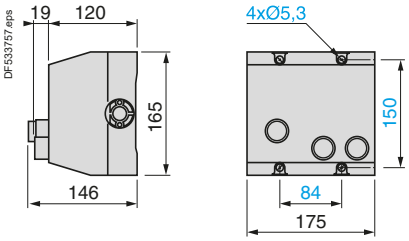

Knock-outs or blanking plugs for cable glands

Type of enclosure	At top		At bottom	
	PG	ISO	PG	ISO
LE1D09 and D12	–	2 x 20	–	2 x 20
LE1D18…D35 and LE2D09…D35	–	2 x 20 or 2 x 25	–	2 x 20 or 2 x 25
LE1 and LE2D40A…D65A	–	1 x 32	–	1 x 20 and 2 x 32
LE2K06 and K09	2 x 13 and 2 x 16	4 x 20	2 x 13 and 2 x 16	4 x 20

References:
pages A1/8, A1/13 and A1/28
Schemes:
page A1/47

Schemes

LE1D09…D65A

DF533760.eps

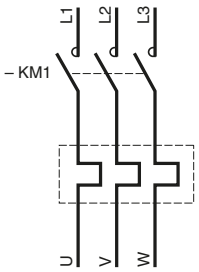

LE1D09…D65A

DF533761.eps

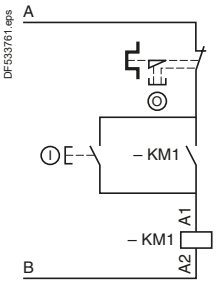

LE1D09…D65A with variant A04 or A05

DF533762.eps

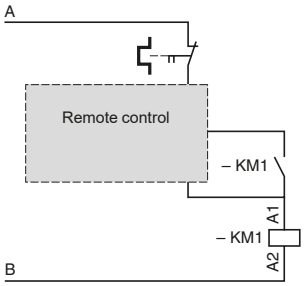

LE2K06, K09

DF533763.eps

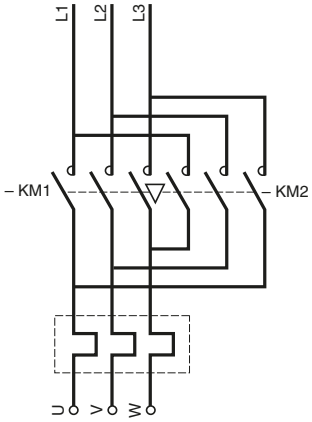

LE2K06, K09

DF533764.eps

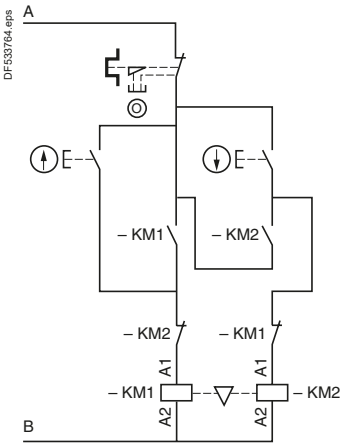

LE2D09…D65A

DF533766.eps

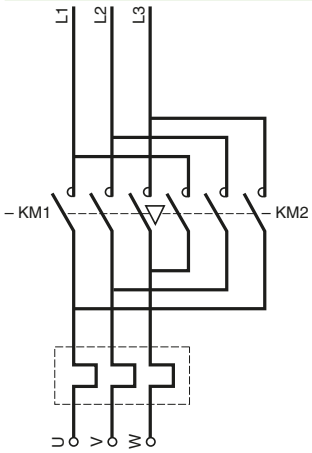

LE2D09…D65A

DF533767.eps

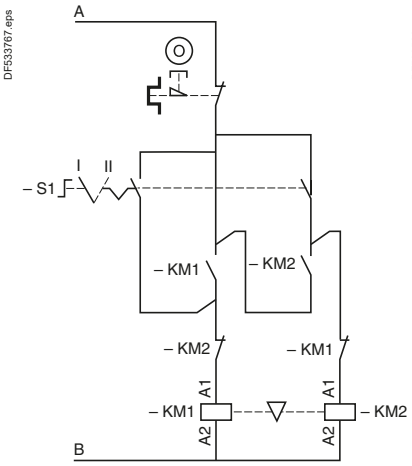

LE2D40A…D65A with variants A04 or A05

DF533768.eps

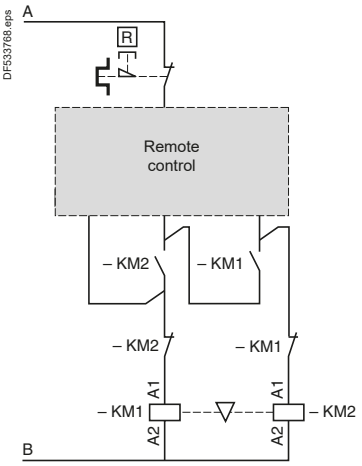

LE1D09…D65A, LE2D09…D65A Connections

Power voltage	Control circuit voltage	A	B
380 V, 400 V, 415 V, 440 V	220 V, 230 V, 240 V	L3	Neutral terminal
	380 V, 400 V, 415 V, 440 V	L3	L1
	Other voltages	Terminal 1	Terminal 2
Other voltages	Other voltages (600 V max)	For customer assembly	

LE2K06, K09 Connections

Power voltage	Control circuit voltage	A	B
380 V, 400 V, 415 V	220 V, 230 V, 240 V	L3	Neutral
	380 V, 400 V, 415 V	L3	L1
Other voltages	Other voltages (440 V max)	For customer assembly	

References:
pages A1/8 and A1/13

Dimensions:
page A1/46

Dimensions

LE4K06 and K09, LE8K06 and K09

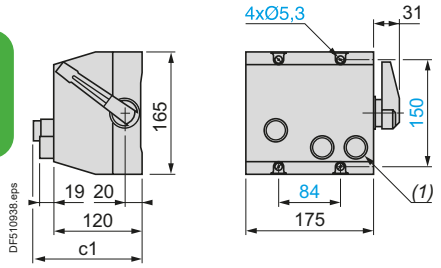

LE4D09…D35, LE8D09…D35

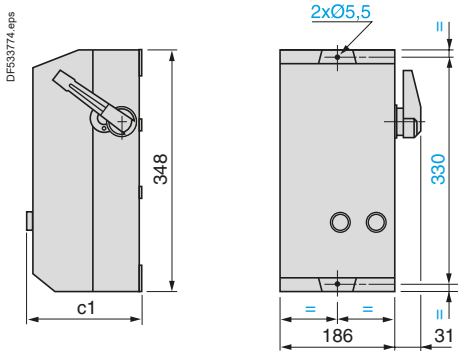

	c1	
	LE4K	LE8K
Standard version	146	146
Variant A05	–	139

(1) For LE8 only.

	c1	
	LE4D	LE8D
Standard version	175.5	182
Variant A04	167	167
Variant A05	175.5	175.5

Knock-outs or blanking plugs for cable glands

Type of enclosure	At top		At bottom	
	PG	ISO	PG	ISO
LE4 and LE8D09…D35	–	2 x 20 or 2 x 25 or 2 x 32 or 2 x 40	–	2 x 20 or 2 x 25 or 2 x 32 or 2 x 40
LE4 and LE8K06 and K09	2 x 13 and 2 x 16	4 x 20	2 x 13 and 2 x 16	4 x 20

Ref.

References:
pages A1/12 and A1/14

Schemes:
page A1/49

Schemes

Schemes

LE4K06, K09 LE4D09…D35

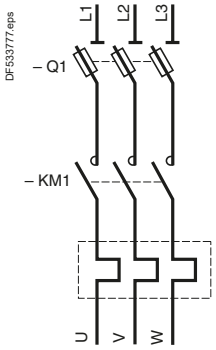

LE4K06, K09

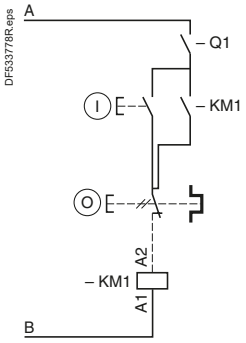

LE4D09…D35

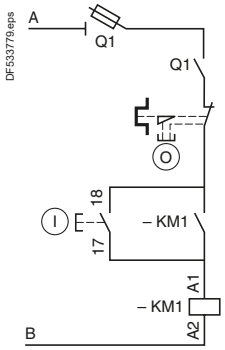

LE4D09…D35 with variant A04 or A05

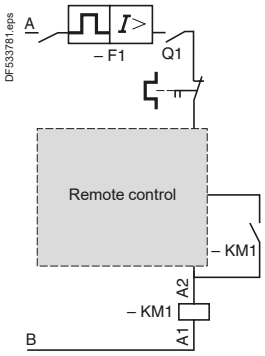

LE8K06, K09 LE8D09…D35

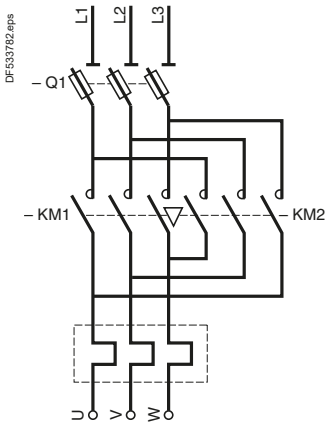

LE8K06, K09

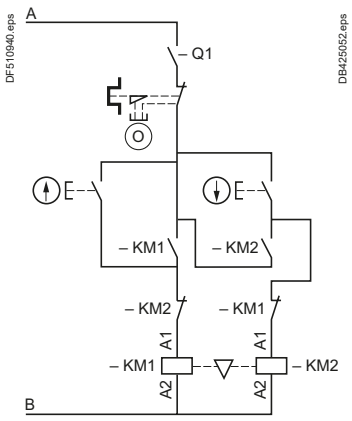

LE8D09...D35

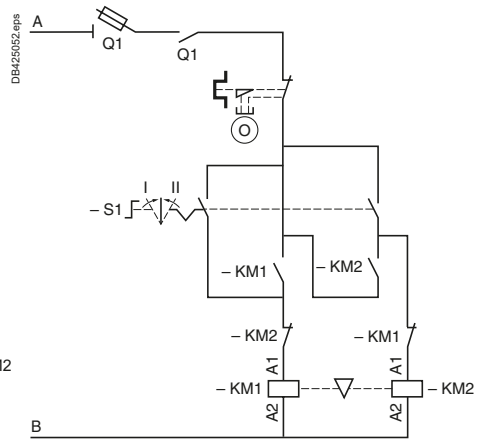

LE4D09 and D12, LE8D09 and D12 Connections			
Power voltage	**Control circuit voltage**	**A**	**B**
380 V, 400 V, 415 V, 440 V	220 V, 230 V, 240 V	L3	Neutral
	380 V, 400 V, 415 V, 440 V	L3	L1
	Other voltages	Terminal 1	Terminal 2
Other voltages	Other voltages (600 V max)	For customer assembly	

LE4D18…D35, LE8D18…D35 Connections			
Power voltage	**Control circuit voltage**	**A**	**B**
380 V, 400 V, 415 V, 440 V	220 V, 230 V, 240 V	L3	Neutral terminal
	380 V, 400 V, 415 V, 440 V	L3	L1
	Other voltages	Terminal 1	Terminal 2
Other voltages	Other voltages (600 V max)	For customer assembly	

LE4K06, K09, LE8K06, K09 Connections			
Power voltage	**Control circuit voltage**	**A**	**B**
380 V, 400 V, 415 V	220 V, 230 V, 240 V	L3	Neutral
	380 V, 400 V, 415 V	L3	L1
Other voltages	Other voltages (440 V max)	For customer assembly	

References:
pages A1/12 and A1/14

Dimensions:
page A1/48

Dimensions, schemes

Dimensions

LE3D09…D35

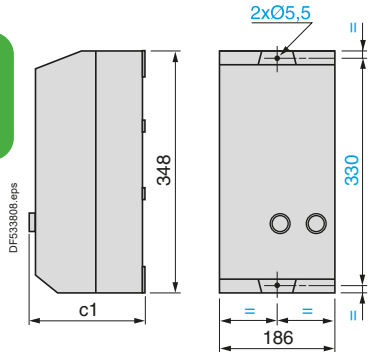

	c1
Standard version	175.5
Variant A04	167
Variant A05	175.5

Knock-outs or blanking plugs for cable glands

Type of enclosure	At top		At bottom	
	PG	ISO	PG	ISO
LE3D09…D35	–	2 x 20 or 2 x 25 or 2 x 32 or 2 x 40	–	2 x 20 or 2 x 25 or 2 x 32 or 2 x 40

Ref.

Schemes

LE3D09…D35

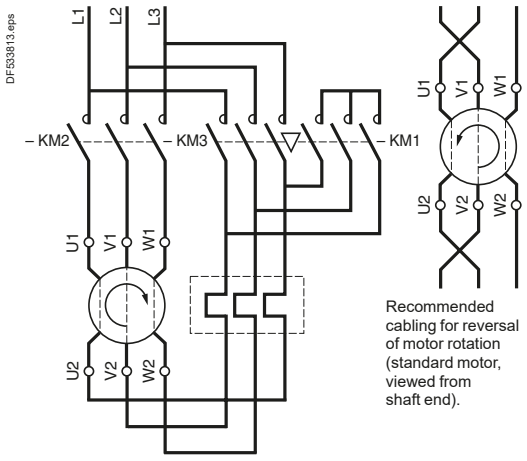

LE3D09…D35

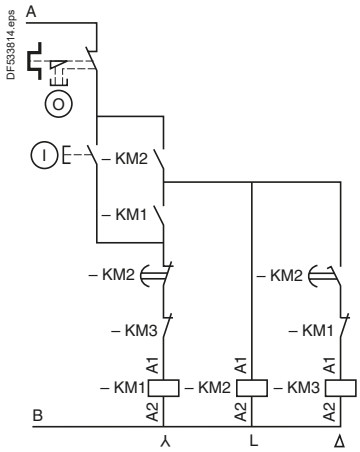

Note: in accordance with current installation regulations, short-circuit protection must be provided by fuses or a circuit breaker.

Connections

Power voltage	Control circuit voltage	A	B
380 V, 400 V, 415 V, 440 V	220 V, 230 V, 240 V	L3	Neutral terminal
	380 V, 400 V, 415 V, 440 V	L3	L1
	Other voltages	Terminal 1	Terminal 2
Other voltages	All voltages (600 V max)	For customer assembly	

References:
page A1/15

Dimensions, schemes

Dimensions

LE1GVMEK

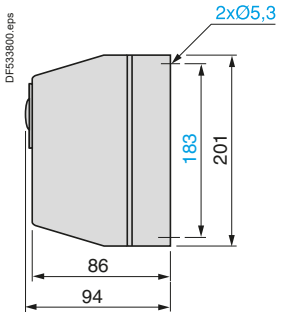

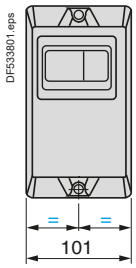

Knock-outs or blanking plugs for cable glands		
Enclosure type	**At top**	**At bottom**
	ISO	**ISO**
LE1GV	2 x 20 or 2 x 25	2 x 20 or 2 x 25

Schemes

LE1GVMEK

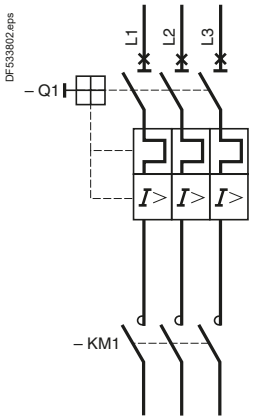

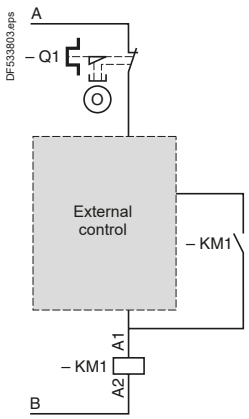

Connections			
Power voltage	**Control circuit voltage**	**A**	**B**
380 V, 400 V, 415 V, 440 V	220 V, 230 V, 240 V	L3	Neutral
	380 V, 400 V, 415 V, 440 V	L3	L1
	Other voltages	For customer assembly	
Other voltages	All voltages (440 V max)	For customer assembly	

References:
page A1/27

Dimensions

Dimensions

LG1K06, K09
LG1D12, D18

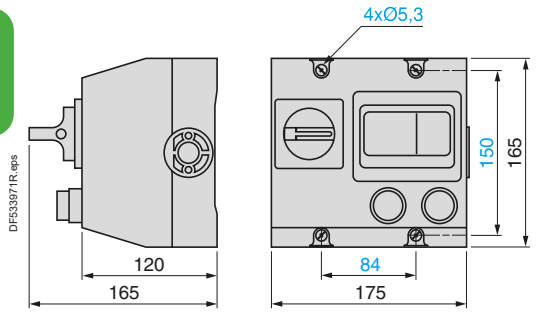

LG7K06, K09, LG7D12, D18
LG8K06, K09, K12

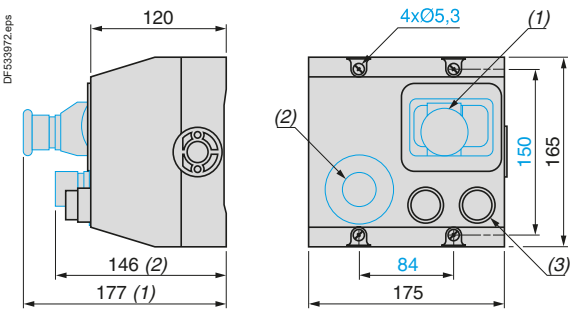

(1) Emergency Stop for starters LG●K06.
(2) Emergency Stop for starters LG●K09, K12, D12 et D18.
(3) Only for LG7.

Knock-outs or blanking plugs for cable glands

Type of enclosure	At top	At bottom
LG1K and LG1D	2 x 13 P and 2 x 16 P	2 x 13 P and 2 x 16 P
LG7K and LG7D	2 x 13 P and 2 x 16 P	2 x 13 P and 2 x 16 P
LG8K	2 x 13 P and 2 x 16 P	2 x 13 P and 2 x 16 P

Ref.

References:
pages A1/18, A1/19 and A1/21

Schemes:
page A1/53

Schemes

LG1K06, K09, D12, D18

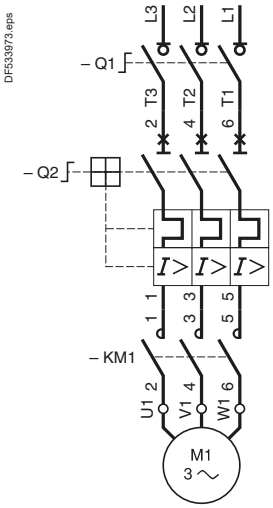

LG1K06, K09, D12, D18

380/400 V, code Q7 or 400/415 V, code N7
220/230 V, code M7

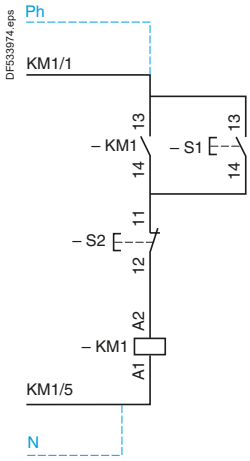

LG7K06

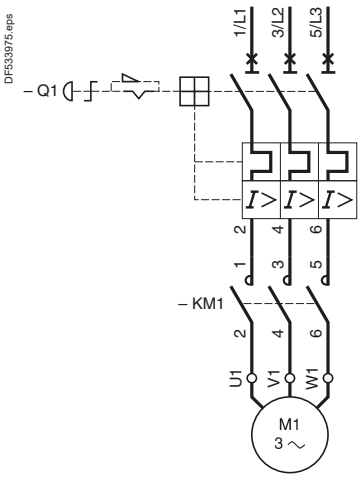

LG7K09, D12, D18

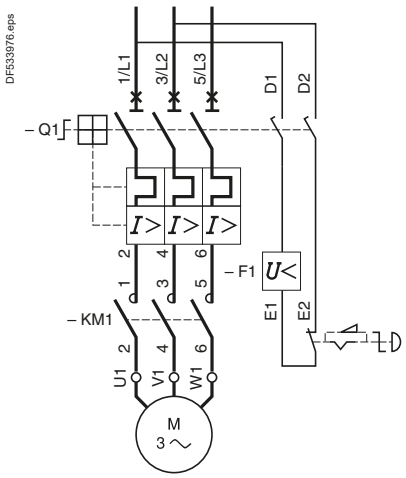

LG7K06, K09, D12, D18

380/400 V, code Q7 or 400/415 V, code N7
220/230 V, code M7

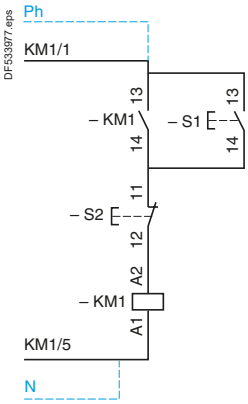

LG8K06

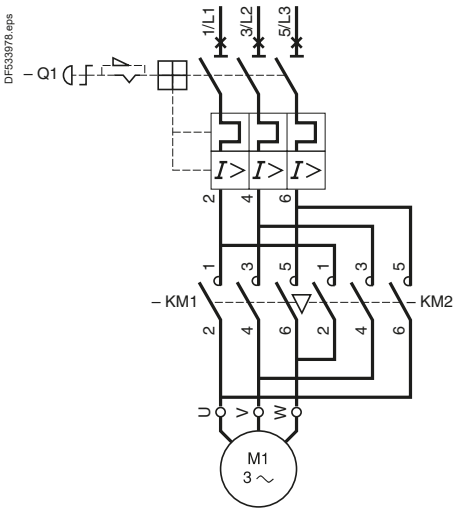

LG8K09, K12

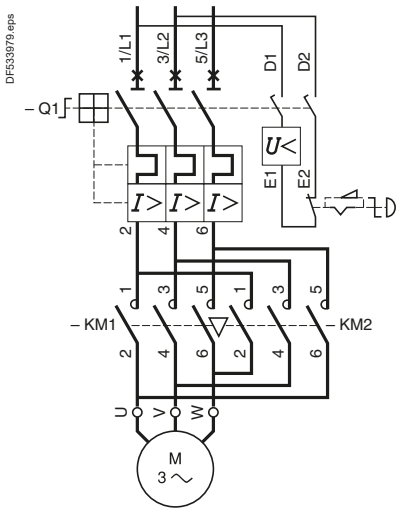

LG8K06, K09, K12

380/400 V, code Q7 or 400/415 V, code N7
220/230 V, code M7

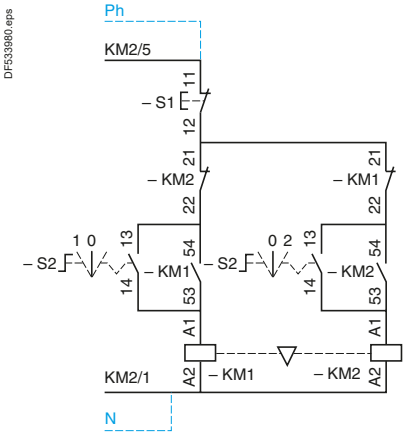

References:
pages A1/18, A1/19 and A1/21

Dimensions:
page A1/52

Dimensions

Dimensions

LJ7K06, LJ8K06

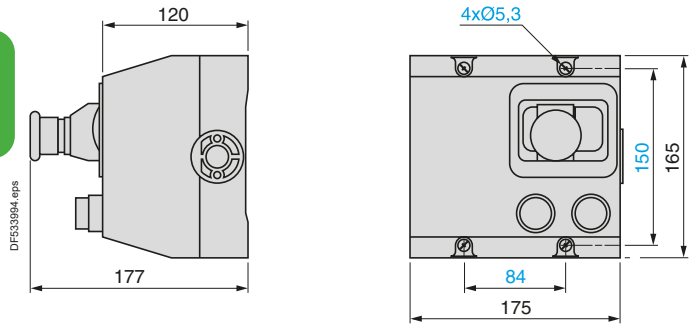

LJ7K09, LJ8K09

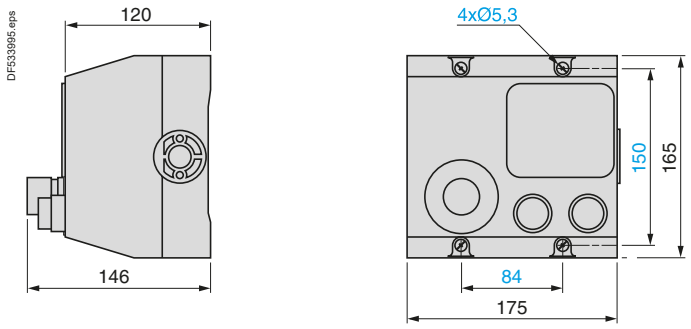

Cut-outs or blanking plugs for cable glands at the top and at the bottom 2 x 13 P and 2 x 16 P.

References:
pages A1/20 and A1/22

Schemes:
page A1/55

Life Is On Schneider Electric

Schemes

LJ7K06

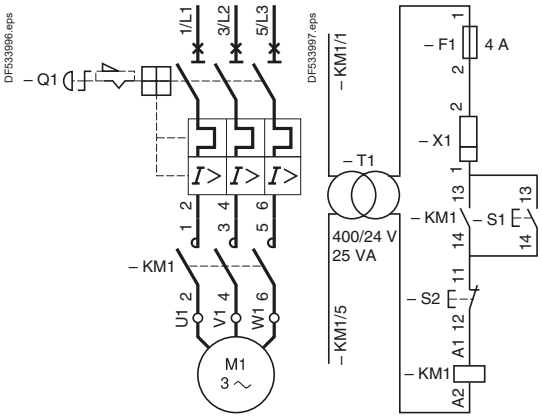

LJ7K09

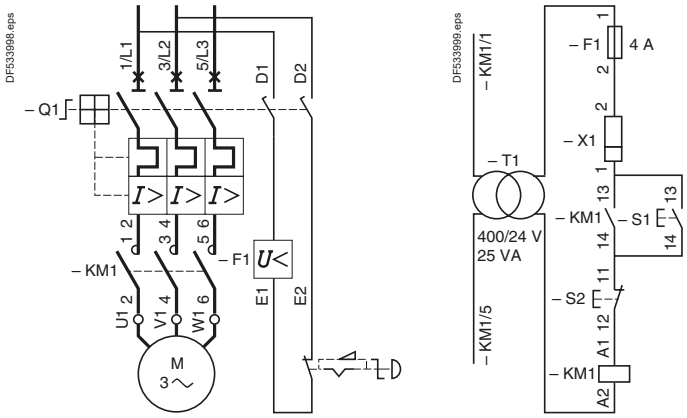

LJ8K06

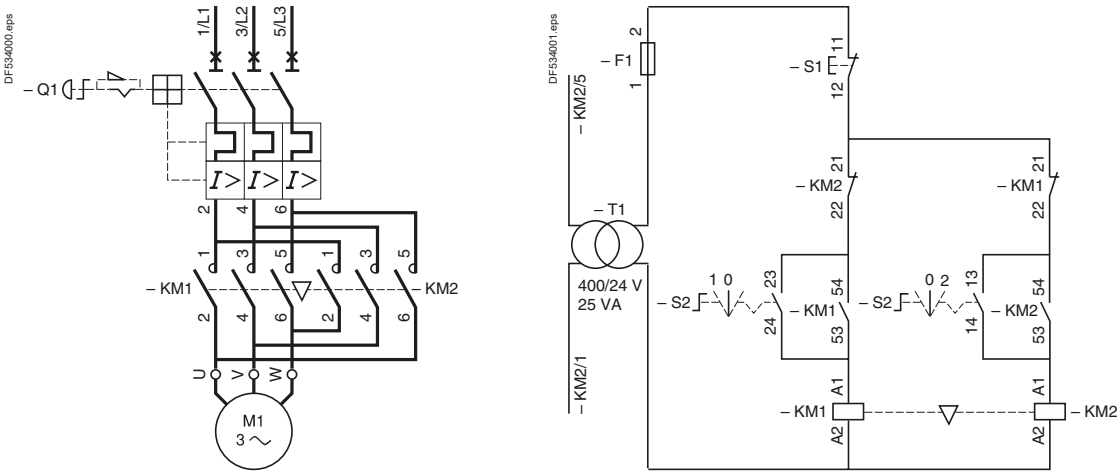

LJ8K09

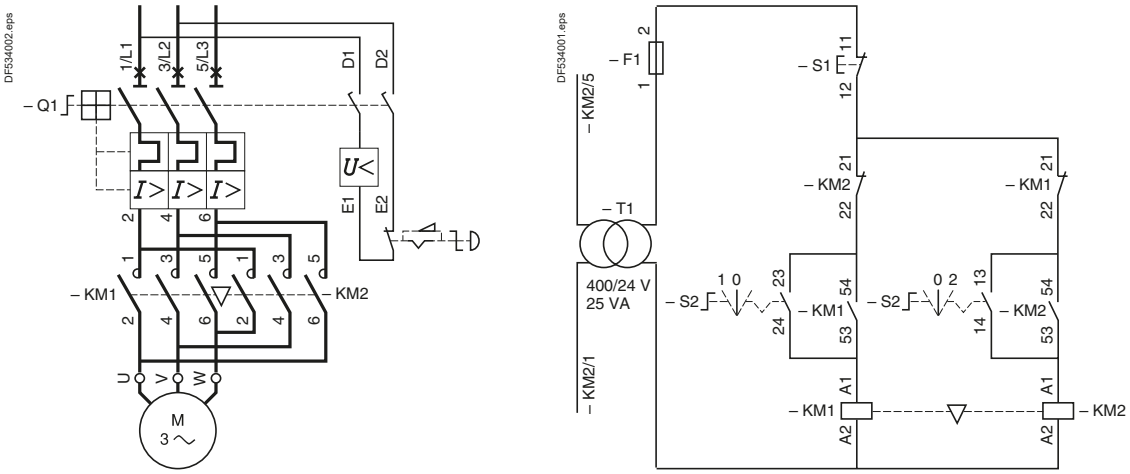

References:
pages A1/20 and A1/22

Dimensions:
page A1/54

TeSys Control
Open, pre-cabled motor starters

Direct-on-line and reversing starters

Composition	Range		Page
Motor circuit breaker + contactor (direct-on-line) Coordination type 1	Up to 4 kW		A2/2
Motor circuit breaker + 2 contactors (reversing) Coordination type 1	Up to 5.5 kW		A2/3
Motor circuit breaker + contactor (direct-on-line) Coordination type 1	Up to 15 kW		A2/4
Motor circuit breaker + 2 contactors (reversing) Coordination type 1	Up to 15 kW		A2/5
Motor circuit breaker + contactor (direct-on-line) Coordination type 2 to be assembled by customer	Up to 30 kW		A2/6
Motor circuit breaker + 2 contactors (reversing) Coordination type 2 to be assembled by customer	Up to 30 kW		A2/7

Star-delta starters

3 contactors + 1 time delay aux. block	Up to 132 kW		A2/8

Star-delta starters for customer assembly

Separated components and mounting kits for suggested motor starter components combinations - on plate or mounting rail	Up to 132 kW		A2/10
Separated components for suggested motor starter combinations - on chassis	Up to 315 kW	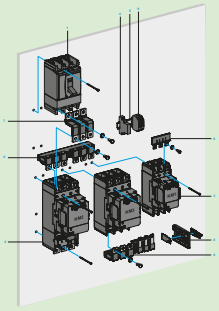	A2/14

Product references

D.O.L. starters, non-reversing, from 0.37 to 4 kW at 400/415 V, type 1 coordination

This pre-assembled combination comprises:
- 1 motor circuit breaker GV2ME,
- 1 3-pole contactor LC1K,
- 1 combination block GV2AF01.

Characteristics

Starter type		GV2		ME06K1	ME07K1	ME08K1	ME10K1	ME14K1
Breaking capacity (Iq) (1)	Conforming to IEC 60947-4-1	400/415 V	**kA**	50	50	50	50	50
		440 V	**kA**	50	50	50	50	15
		500 V	**kA**	50	50	50	50	10 (4 kW) 6 (5.5 kW)

References

PB123801.tif



GV2ME08K1●●

D.O.L. starters, non-reversing

Standard power ratings of 3-phase motors 50/60 Hz in AC-3			Setting range of thermal trips	Fixed magnetic tripping current 13 Irth	For customer assembly		Pre-assembled	Weight
400/ 415 V	440 V	500 V			Motor circuit-breaker Reference	Contactor Reference to be completed (2)	Basic reference, to be completed by adding the voltage code (3)	
kW	kW	kW	A	A				kg
0.37 0.55 –	0.37 0.55 –	0.37 0.55 0.75	1…1.6	22.5	GV2ME06	LC1K06	**GV2ME06K1●●**	0.460
0.75 –	0.75 1.1	– 1.1	1.6…2.5	33.5	GV2ME07	LC1K06	**GV2ME07K1●●**	0.460
1.1 1.5	– 1.5	1.5 2.2	2.5…4	51	GV2ME08	LC1K06	**GV2ME08K1●●**	0.460
2.2 –	2.2 3	– 3	4…6.3	78	GV2ME10	LC1K06	**GV2ME10K1●●**	0.460
3 4	– 4	4 5.5	6…10	138	GV2ME14	LC1K09	**GV2ME14K1●●**	0.460

Add-on blocks

Description	Sold in lots of	Unit reference
Combination block between circuit breaker and contactor	10	**GV2AF01**

*(1) The breaking performance of circuit breakers **GV2ME** can be increased by adding a current limiter **GV1L3**, see page B6/21.*

(2) Please consult your Regional Sales Office.

(3) Please check the availability of your variant in the index page A2/16. The SEARCH function of your viewer can be used.

Volts	24	110	220/230	230	230/240	380/400
∿ **50/60 Hz**	B7	F7	M7	P7	U7	Q7
⎓ (4)	BW3	–	–	–	–	–

(4) Coil: low consumption (1.5 W), wide range (0.7…1.3 Uc) with integral suppression device as standard.

Dimensions: page A2/18
Schemes: page A2/20

Product references

D.O.L. starters, reversing, from 0.37 to 4 kW at 400/415 V, type 1 coordination

This pre-assembled combination comprises:
- 1 motor circuit breaker GV2ME,
- 1 3-pole reversing contactor LC2K,
- 1 combination block GV2AF01.

Characteristics

Starter type		GV2		ME06K2	ME07K2	ME08K2	ME10K2	ME14K2
Breaking capacity (Iq) (1)	Conforming to IEC 60947-4-1	400/415 V	**kA**	50	50	50	50	50
		440 V	**kA**	50	50	50	50	15
		500 V	**kA**	50	50	50	50	10 (4 kW) 6 (5.5 kW)

References


PB123802.tif

GV2ME06K2●●

D.O.L. starters, reversing

Standard power ratings of 3-phase motors 50/60 Hz in AC-3			Setting range of thermal trips	Fixed magnetic tripping current 13 Irth	For customer assembly		Pre-assembled	Weight
400/ 415 V	440 V	500 V			Motor circuit-breaker Reference	Contactor Reference to be completed (2)	Basic reference, to be completed by adding the voltage code (3)	
kW	kW	kW	A	A				kg
0.37 0.55 –	0.37 0.55 –	0.37 0.55 0.75	1…1.6	22.5	GV2ME06	LC2K06	**GV2ME06K2●●**	0.460
0.75 –	0.75 1.1	– 1.1	1.6…2.5	33.5	GV2ME07	LC2K06	**GV2ME07K2●●**	0.460
1.1 1.5	– 1.5	1.5 2.2	2.5…4	51	GV2ME08	LC2K06	**GV2ME08K2●●**	0.460
2.2 –	2.2 3	– 3	4…6.3	78	GV2ME10	LC2K06	**GV2ME10K2●●**	0.460
3 4	– 4	4 5.5	6…10	138	GV2ME14	LC2K09	**GV2ME14K2●●**	0.460

Add-on blocks

Description	Sold in lots of	Unit reference
Combination block between circuit breaker and contactor	10	**GV2AF01**

*(1) The breaking performance of circuit breakers **GV2ME** can be increased by adding a current limiter **GV1L3**, see page B6/21.*

(2) Please consult your Regional Sales Office.

(3) Please check the availability of your variant in the index page A2/16. The SEARCH function of your viewer can be used.

Volts	24	110	220/230	230	230/240	380/400
∿ **50/60 Hz**	B7	F7	M7	P7	U7	Q7
⎓ (4)	BW3	–	–	–	–	–

(4) Coil: low consumption (1.5 W), wide range (0.7…1.3 Uc) with integral suppression device as standard.

***Note:** The combinations are valid for IE2 motors and IE3 with maximum starting current = 7.5 x motor rating current (see pages A5/4 and A5/5).*

Dimensions:
page A2/18

Schemes:
page A2/20

D.O.L. starters, non-reversing, from 0.06 to 15 kW at 400/415 V, type 1 coordination

This pre-assembled combination comprises:
- 1 motor circuit breaker GV2ME,
- 1 3-pole contactor LC1D,
- 1 combination block GV2AF3.

Characteristics

Starter type		GV2		DM102 to DM110	DM114	DM116	DM132
Breaking capacity (Iq) (1)	Conforming to IEC 60947-4-1	400/415 V	**kA**	50	50	15	10
		440 V	**kA**	50	15	8	6
		500 V	**kA**	50	6	6	4

References


PB121676.eps

GV2DM102●●

D.O.L. starters, non-reversing

Standard power ratings of 3-phase motors 50/60 Hz in AC-3			Setting range of thermal trips	Fixed magnetic tripping current 13 Irth	For customer assembly		Pre-assembled	Weight
400/415 V	440 V	500 V			Motor circuit-breaker Reference	Contactor Reference to be completed (2)	Basic reference, to be completed by adding the voltage code (2) (3)	
kW	kW	kW	A	A				kg
0.06	0.06	–	0.16…0.25	2.4	GV2ME02	LC1D09●●	**GV2DM102●●** (4)	0.596
0.75	0.75	–	1.6…2.5	33.5	GV2ME07	LC1D09●●	**GV2DM107●●** (4)	0.596
–	1.1	1.1						
1.1	–	1.5	2.5…4	51	GV2ME08	LC1D09●●	**GV2DM108●●** (4)	0.596
1.5	1.5	2.2						
2.2	2.2	–	4…6.3	78	GV2ME10	LC1D09●●	**GV2DM110●●** (4)	0.596
–	3	3						
3	–	4	6…10	138	GV2ME14	LC1D09●●	**GV2DM114●●** (4)	0.596
4	4	5.5						
5.5	5.5	7.5	9…14	170	GV2ME16	LC1D12●●	**GV2DM116●●**	0.601
15	15	18.5	24…32	416	GV2ME32	LC1D32●●	**GV2DM132●●**	0.651

Add-on blocks

Description	Mounting of GV2	Sold in lots of	Unit reference
Combination block between circuit breaker and contactor	⊔ rail	10	**GV2AF3**
	Mounting plate LAD 311	10	**GV2AF4**

*(1) The breaking performance of circuit breakers **GV2ME** can be increased by adding a current limiter **GV1L3**, see page B6/21.*

(2) Standard control circuit voltages (for other voltages, please consult your Regional Sales Office):

Volts	24	220	230
∿ **50/60 Hz**	B7	M7	P7
⎓ (5)	BD	–	–

(3) Please check the availability of your variant in the index page A2/16. The SEARCH function of your viewer can be used.

(4) Type 2 coordination also possible, see page A5/11.

*(5) Only available for **GV2DM**. Coil with integral suppression device as standard.*

***Note:** The combinations are valid for IE2 motors and IE3 with maximum starting current = 7.5 x motor rating current (see pages A5/4 and A5/5).*

Dimensions: page A2/18
Schemes: page A2/20

D.O.L. starters, reversing, from 0.12 to 15 kW at 400/415 V, type 1 coordination

This pre-assembled combination comprises:
- 1 motor circuit breaker GV2 ME,
- 1 3-pole reversing contactor LC2 D,
- 1 combination block GV2AF3.

Characteristics

Starter type		GV2		DM202 to DM210	DM214	DM216	DM220	DM221	DM222	DM232
Breaking capacity (Iq) (1)	Conforming to IEC 60947-4-1	400/415 V	**kA**	50	50	15	15	15	15	10
		440 V	**kA**	50	15	8	8	6	6	6
		500 V	**kA**	50	10	6	6	4	4	4

References

PB121683.eps



GV2DM202●●

D.O.L. starters, reversing (2)

Standard power ratings of 3-phase motors 50/60 Hz in AC-3			Setting range of thermal trips	Fixed magnetic tripping current 13 Irth	For customer assembly		Pre-assembled	Weight
400/415V	440 V	500 V			Motor circuit-breaker Reference	Contactor Reference to be completed (3)	Basic reference, to be completed by adding the voltage code (4) (5)	
kW	kW	kW	A	A				kg
0.12 0.18	– 0.18	– –	0.40…0.63	8	GV2ME04	LC2D09●●	**GV2DM204●●**	0.963
0.25 0.37	0.25 0.37	– –	0.63…1	13	GV2ME05	LC2D09●●	**GV2DM205●●**	0.963
– 0.55 –	– 0.55 –	0.37 0.55 0.75	1…1.6	22.5	GV2ME06	LC2D09●●	**GV2DM206●●**	0.963
1.1 1.5	– 1.5	1.5 2.2	2.5…4	51	GV2ME08	LC2D09●●	**GV2DM208●●**	0.963
9	11	11	17…23	327	GV2ME21	LC2D25●●	**GV2DM221●●**	1.063
15	15	18.5	24…32	416	GV2ME32	LC2D32●●	**GV2DM232●●**	1.073

Add-on blocks

Description	Mounting of GV2	Sold in lots of	Unit reference
Combination block between circuit breaker and contactor	⊔ rail	10	**GV2AF3**
	Mounting plate LAD 311	10	**GV2AF4**

*(1) The breaking performance of circuit breakers **GV2ME** can be increased by adding a current limiter **GV1L3**, see page B6/21.*
(2) Type 2 coordination also possible, see page B6/21.
(3) See page B8/22.
(4) Standard control circuit voltages (for other voltages, please consult your Regional Sales Office):

Volts	24	220	230
∼ 50/60 Hz	B7	M7	P7
⎓ (6)	BD	–	–

(5) Please check the availability of your variant in the index page A2/16. The SEARCH function of your viewer can be used.
(6) Coil with integral suppression device as standard.

***Note:** The combinations are valid for IE2 motors and IE3 with maximum starting current = 7.5 x motor rating current (see pages A5/4 and A5/5).*

Dimensions:
page A2/18

Schemes:
page A2/20

D.O.L. starters, non-reversing, from 0.06 to 30 kW at 400/415 V, type 2 coordination

To be assembled by customer, using:
- 1 motor circuit breaker GV2P,
- 1 3-pole contactor LC1D,
- 1 combination block GV2AF3.

Characteristics

Starter type		GV2		P02 to P110	P14	P16	P20	P21	P22	P32
Breaking capacity (Iq) (1)	Conforming to IEC 60947-4-1	400/415 V	**kA**	130	130	130	50	50	50	50
		440 V	**kA**	130	130	50	20	20	20	20
		500 V	**kA**	130	50	42	10	10	10	10

References



GV2P●● + LC1D09 + GV2AF3





GV3P651 + LC1D65A●●

D.O.L. starters, non-reversing

Standard power ratings of 3-phase motors 50/60 Hz in AC-3			Setting range of thermal trips	Fixed magnetic tripping current 13 Irth	For customer assembly		Weight
400/ 415 V	440 V	500 V			Motor circuit-breaker Reference	Contactor Reference to be completed (2)	
kW	kW	kW	A	A			kg
0.06	0.06	–	0.16…0.25	2.4	GV2P02	LC1D09●●	0.686
– 0.09	0.09 0.12	–	0.25…0.40	5	GV2P03	LC1D09●●	0.686
0.12 0.18	– 0.18	– –	0.40…0.63	8	GV2P04	LC1D09●●	0.686
0.25 0.37	0.25 0.37	– –	0.63…1	13	GV2P05	LC1D09●●	0.686
– 0.55 –	– 0.55 –	0.37 0.55 0.75	1…1.6	22.5	GV2P06	LC1D09●●	0.686
0.75 –	0.75 1.1	– 1.1	1.6…2.5	33.5	GV2P07	LC1D09●●	0.686
1.1 1.5	– 1.5	1.5 2.2	2.5…4	51	GV2P08	LC1D09●●	0.696
2.2 –	2.2 3	– 3	4…6.3	78	GV2P10	LC1D09●●	0.736
3 4	– 4	4 5.5	6…10	138	GV2P14	LC1D09●●	0.736
5.5 –	5.5 7.5	7.5 9	9…14	170	GV2P16	LC1D25●●	0.741
7.5	9	–	13…18	223	GV2P20	LC1D25●●	0.736
9	11	11	17…23	327	GV2P21	LC1D25●●	0.741
11	–	15	20…25	327	GV2P22	LC1D25●●	0.741
15	15	18.5	24…32	416	GV2P32	LC1D32●●	0.741
18.5	–	–	30…40	560	GV3P401 (5)	LC1D50A●●	1.725
–	18.5	22	30…40	560	GV3P401 (5)	LC1D65A●●	1.730
22	–	–	37…50	700	GV3P501 (5)	LC1D50A●●	1.725
–	22	30	37…50	700	GV3P501 (5)	LC1D65A●●	1.730
30	37	–	48…65	910	GV3P651 (5)	LC1D65A●●	1.730

Add-on blocks

Description	Mounting of GV2	Sold in lots of	Unit reference
Combination block between circuit breaker and contactor	⊔ rail	10	**GV2AF3**

*(1) The breaking performance of circuit breakers **GV2P** can be increased by adding a current limiter **GV1L3**, see page B6/11.*
(2) See page B8/22.
(3) Standard control circuit voltages (for other voltages, please consult your Regional Sales Office):

Volts	24	220	230
∼ **50/60 Hz**	B7	M7	P7
⎓ (6)	BD	–	–

(4) Please check the availability of your variant in the index page A2/16. The SEARCH function of your viewer can be used.
*(5) Circuit breaker supplied without downstream **Ever**Link® power terminal block, which is required for vertical mounting. For side by side mounting, use a **GV3P** circuit breaker with terminal blocks and the **GV3S** set of S-shape busbars (see page B8/42).*
(6) Coil with integral suppression device as standard.

***Note:** The combinations are valid for IE2 motors and IE3 with maximum starting current = 7.5 x motor rating current (see pages A5/4 and A5/5).*

Dimensions: pages A2/18 and A2/19
Schemes: page A2/21

Product references

D.O.L. starters, reversing, from 0.06 to 30 kW at 400/415 V, type 2 coordination

To be assembled by customer, using:
- 1 motor circuit breaker GV2P,
- 1 3-pole reversing contactor LC2D,
- 1 combination block GV2AF3.

Characteristics

Starter type		GV2		P02 to P10	P14	P16	P20	P21	P22	P32
Breaking capacity (Iq) (1)	Conforming to IEC 60947-4-1	400/415 V	kA	130	130	130	50	50	50	50
		440 V	kA	130	130	50	20	20	20	20
		500 V	kA	130	50	42	10	10	10	10

References

D.O.L. starters, reversing


PB121701.eps

GV2P●● + LC1D09 + GV2AF3


PB121675.eps


PB121885.eps

GV3P651 + LC2D65A●●

Standard power ratings of 3-phase motors 50/60 Hz in AC-3				Setting range of thermal trips	Fixed magnetic tripping current 13 Irth	For customer assembly		Weight
400/ 415 V	440 V	500 V				Motor circuit-breaker Reference	Contactor Reference to be completed (2)	
kW	kW	kW		A	A			kg
0.06	0.06	–		0.16…0.25	2.4	GV2P02	LC2D09●●	1.053
– 0.09	0.09 0.12	–		0.25…0.40	5	GV2P03	LC2D09●●	1.053
0.12 0.18	– 0.18	– –		0.40…0.63	8	GV2P04	LC2D09●●	1.053
0.25 0.37	0.25 0.37	– –		0.63…1	13	GV2P05	LC2D09●●	1.053
– 0.55 –	– 0.55 –	0.37 0.55 0.75		1…1.6	22.5	GV2P06	LC2D09●●	1.053
0.75 –	0.75 1.1	– 1.1		1.6…2.5	33.5	GV2P07	LC2D09●●	1.053
1.1 1.5	– 1.5	1.5 2.2		2.5…4	51	GV2P08	LC2D09●●	1.073
2.2 –	2.2 3	– 3		4…6.3	78	GV2P10	LC2D09●●	1.153
3 4	– 4	4 5.5		6…10	138	GV2P14	LC2D09●●	1.153
5.5 –	5.5 7.5	7.5 9		9…14	170	GV2P16	LC2D25●●	1.163
7.5	9	–		13…18	223	GV2P20	LC2D25●●	1.153
9	11	11		17…23	327	GV2P21	LC2D25●●	1.163
11	–	15		20…25	327	GV2P22	LC2D25●●	1.163
15	15	18.5		24…32	416	GV2P32	LC2D32●●	1.163
18.5	–	–		30…40	560	GV3P401 (5)	LC2D50A●●	2.750
–	18.5	22		30…40	560	GV3P401 (5)	LC2D65A●●	2.760
22	–	–		37…50	700	GV3P501 (5)	LC2D50A●●	2.750
–	22	30		37…50	700	GV3P501 (5)	LC2D65A●●	2.760
30	37	–		48…65	910	GV3P651 (5)	LC2D65A●●	2.760

Add-on blocks

Description	Mounting of GV2	Sold in lots of	Unit reference
Combination block between circuit breaker and contactor	⊔ rail	10	GV2AF3

*(1) The breaking performance of circuit breakers **GV2P** can be increased by adding a current limiter **GV1L3**, see page B6/11.*

(2) See page B8/22.

(3) Standard control circuit voltages (for other voltages, please consult your Regional Sales Office):

Volts	24	220	230
∿ 50/60 Hz	B7	M7	P7
⎓ (6)	BD	–	–

(4) Please check the availability of your variant in the index page A2/16. The SEARCH function of your viewer can be used.

*(5) Circuit breaker supplied without downstream **Ever**Link® power terminal block, which is required for vertical mounting. For side by side mounting, use a **GV3P** circuit breaker with terminal blocks and the **GV3S** set of S-shape busbars (see page B8/42).*

(6) Coil with integral suppression device as standard.

***Note:** The combinations are valid for IE2 motors and IE3 with maximum starting current = 7.5 x motor rating current (see pages A5/4 and A5/5).*

Dimensions:
pages A2/18 and A2/19

Schemes:
page A2/21


PB123808.eps

LC3D32A●●

Plate mounted starters without isolating device

Maximum operating rate: 30 starts/hour. Maximum starting time: 30 seconds.

Standard power ratings of squirrel cage motors Mains voltage - delta connection				Auxiliary contacts available on each contactor						Star delta mechanical interlock	Basic reference, to be completed by adding the voltage code (2) (3)	Weight
				line		delta		star				
220/ 230 V	380/ 400 V	415 V	440 V	KM2		KM3		KM1				
kW	kW	kW	kW									kg
4	7.5	7.5	7.5	–	–	–	– (4)	–	1	With	**LC3D09A●●**	1.530
5.5	11	11	11	–	–	–	– (4)	–	1	With	**LC3D12A●●**	1.530
11	18.5	22	22	–	–	–	– (4)	–	1	With	**LC3D18A●●**	1.730
15	25	30	30	–	–	–	– (4)	–	1	With	**LC3D32A●●**	2.030
37	75	75	75	–	1	1	– (4)	–	– (4)	Without	**LC3D80●●**	5.200
										With	**LC3D80●●A64**	5.400
63	110	110	110	–	1	1	– (4)	–	– (4)	Without	**LC3D115●●** (5)	11.800
										With	**LC3D115●●A64** (5)	12.100
75	132	132	147	–	1	1	– (4)	–	1 (4)	Without	**LC3D150●●** (5)	12.100
										With	**LC3D150●●A64** (5)	12.100

Rail mounted starters (35 mm ⊥ rail) without isolating device

Standard power ratings of squirrel cage motors Mains voltage - delta connection				Auxiliary contacts available on each contactor						Star delta mechanical interlock	Basic reference, to be completed by adding the voltage code (2) (3)	Weight
				line		delta		star				
220/ 230 V	380/ 400 V	415 V	440 V	KM2		KM3		KM1				
kW	kW	kW	kW									kg
Maximum operating rate: 12 starts/hour. Maximum starting time: 30 seconds.												
4	7.5	7.5	7.5	–	–	–	–	–	1	With	**LC3K09●●**	0.740
Maximum operating rate: 30 starts/hour. Maximum starting time: 30 seconds												
4	7.5	7.5	7.5	–	–	–	– (4)	–	1	With	**LC3D090A●●**	1.530
5.5	11	11	11	–	–	–	– (4)	–	1	With	**LC3D120A●●**	1.530
11	18.5	22	22	–	–	–	– (4)	–	1	With	**LC3D180A●●**	1.730
15	25	30	30	–	–	–	– (4)	–	1	With	**LC3D320A●●**	2.030

(1) Protection must be provided by the addition of a thermal overload relay, to be ordered separately. Select appropriate overload relay for setting at 0.58 of the full load rated motor current (see pages B11/4 and B11/5).

(2) Standard control circuit voltages:

Volts ∿ 50/60 Hz	24	36	42	48	110	220	230	240	380	400	415	440
Star-delta starters LC3K09												
Code	B7	C7	D7	E7	F7	M7	P7	U7	–	–	–	–
Star-delta starters LC3D09A...D150, LC3D090A...D320A												
Code	B7	–	D7	E7	F7	M7	P7	U7	Q7	V7	N7	R7

For other voltages, please consult your Regional Sales Office.

(3) Please check the availability of your variant in the index page A2/16. The SEARCH function of your viewer can be used.

*(4) One auxiliary contact block type **LADN** can also be fitted, see page B8/36.*

*(5) These starters consist of contactors **LC1D115** or **D150** without connectors.*

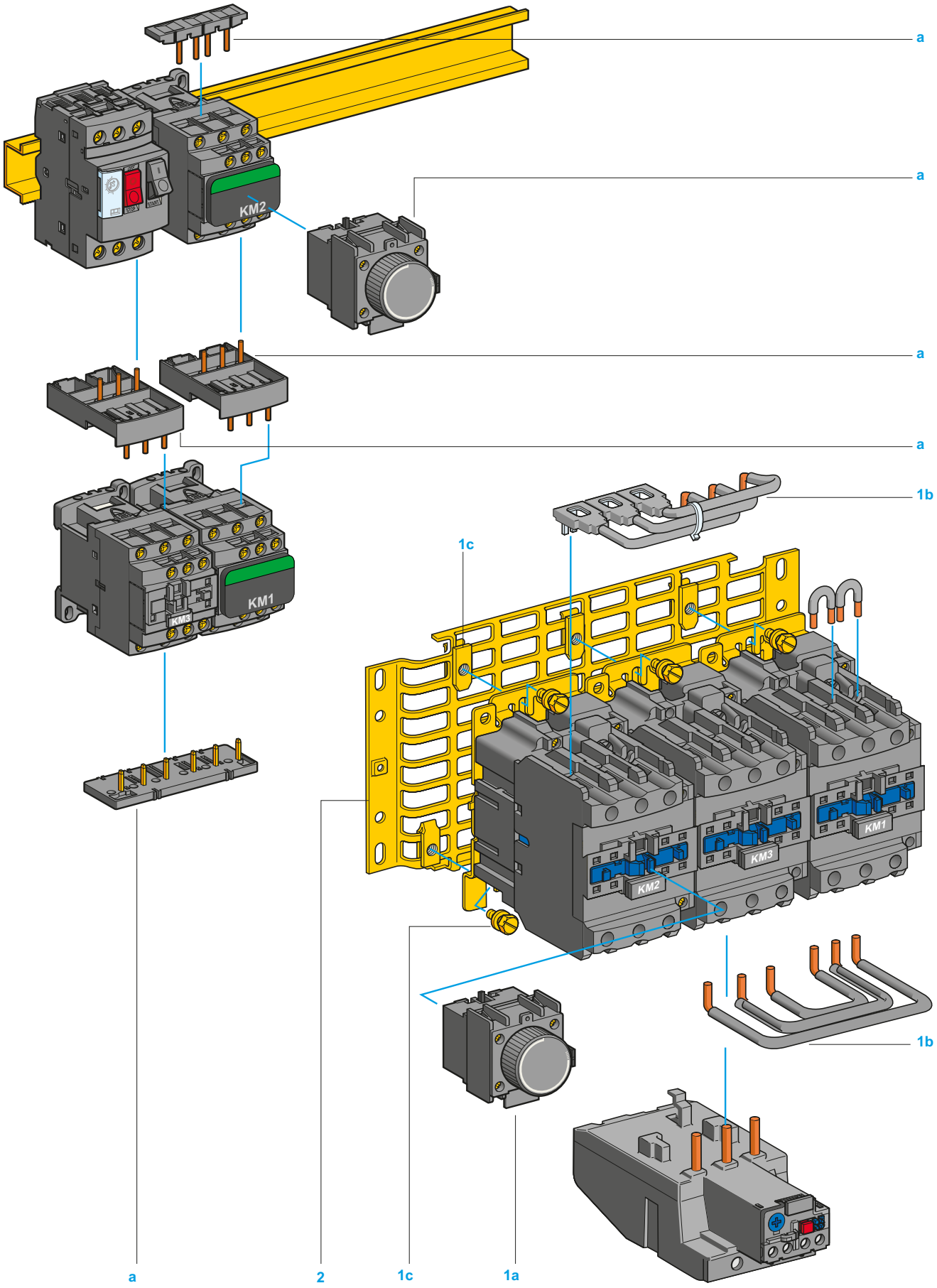
a
a
a
a
1b
1c
KM2
KM1
KM3
KM1
KM3
KM2
1b
a
2
1c
1a

Star-delta starters without mechanical interlock, for customer assembly on plate or on mounting rail (2)

Starters for direct combination with a circuit breaker

Maximum operating rate: 30 starts/hour. Maximum starting time: 30 seconds

Standard power ratings of squirrel cage motors (3) Mains voltage-delta connection		Thermal-magnetic motor circuit breaker *References in italics are available in CEE zone only*	Contactors (basic references, to be completed by adding the voltage code) (4)		
400/ 415 V	440 V		line	delta	star
kW	kW		KM2	KM3	KM1
7.5	7.5	**GV2ME20** or *GV2ME20AP*	**LC1D09●●**	**LC1D09●●**	**LC1D09●●**
–	9	**GV2ME20** or *GV2ME20AP*	**LC1D12●●**	**LC1D12●●**	**LC1D09●●**
9	11	**GV2ME21** or *GV2ME21AP*	**LC1D12●●**	**LC1D12●●**	**LC1D09●●**
11	–	**GV2ME22** or *GV2ME22AP*	**LC1D12●●**	**LC1D12●●**	**LC1D09●●**
15	15	**GV2ME32** or *GV2ME32AP*	**LC1D18●●**	**LC1D18●●**	**LC1D09●●**

Separate component

Description	Illustration item no.	Reference
Mounting kit comprising: power circuit connections and 1 time delay contact block LADS2	a	**LAD912GV**

Starters for mounting separately from upstream protection

Maximum operating rate: 30 starts/hour. Maximum starting time: 30 seconds.

Standard power ratings of squirrel cage motors (3) Mains voltage - delta connection				Contactors (basic references, to be completed by adding the voltage code) (4)			Separate components (see below)
220/ 230 V	380/ 400 V	415 V	440 V	line	delta	star	
kW	kW	kW	kW	KM2	KM3	KM1	Component types
4	7.5	7.5	7.5	**LC1D09●●**	**LC1D09●●**	**LC1D09●●**	D09
5.5	11	11	11	**LC1D18●●** (6)	**LC1D12●●**	**LC1D09●●**	D12
11	18.5	22	22	**LC1D25●●** (7)	**LC1D25●●** (7)	**LC1D09●●**	D18
15	25	30	30	**LC1D32●●**	**LC1D32●●**	**LC1D18●●**	D32
18.5	37	37	37	**LC1D40A●●**	**LC1D40A●●**	**LC1D40A●●**	D40
30	55	59	59	**LC1D50A●●**	**LC1D50A●●**	**LC1D40A●●**	D50
37	75	75	75	**LC1D80●●**	**LC1D80●●**	**LC1D50A●●**	D80
63	110	110	110	**LC1D115●●**	**LC1D115●●**	**LC1D80●●**	D115 (5)
75	132	132	147	**LC1D150●●**	**LC1D150●●**	**LC1D115●●**	D150 (5)

Separate components

Description	Illustration item no.	For components type (5)	Reference	Without timer LADS2
Mounting kit comprising: - 1 time delay contact block LADS2 (D09…D80) (3), - power circuit connections (D09…D80), - screws and clamps for fixing contactors to the plate (D40…D80).	1 a	LC1D09 to D38 (8)	**LAD91217**	**LAD91218**
		LC1D09 to D38 (9)	**LAD93217**	**LAD93218**
	1 b	D40 and D50	**LA9D5017**	–
	1 c	D80	**LA9D8017**	–
Equipment mounting plates	2	LC1D09 to D38	**LA9D12974**	
		D80	**LA9D80973**	

(1) Protection must be provided by the addition of a thermal overload relay, to be ordered separately.
Select appropriate overload relay for setting at 0.58 of the full load rated motor current, see pages B11/4 and B11/5.
(2) For mounting, assembly and cabling: please refer to installation instructions supplied with the equipment.
(3) See comments on page A2/22.
(4) See page B8/22.
(5) For D115 and D150 components, see illustration and separate parts on pages A2/12 and A2/13.
(6) A D12 component is adequate for the application, but use of a D18 is recommended.
(connection capacity, correct use of power connection kit and connections).
(7) A D18 component is adequate for the application, but use of a D25 is recommended.
(connection capacity, correct use of power connection kit and connections).
(8) For assembly of 3 contactors of the same physical size (depth).
(9) For assembly of 3 contactors with star contactor physically smaller (depth).

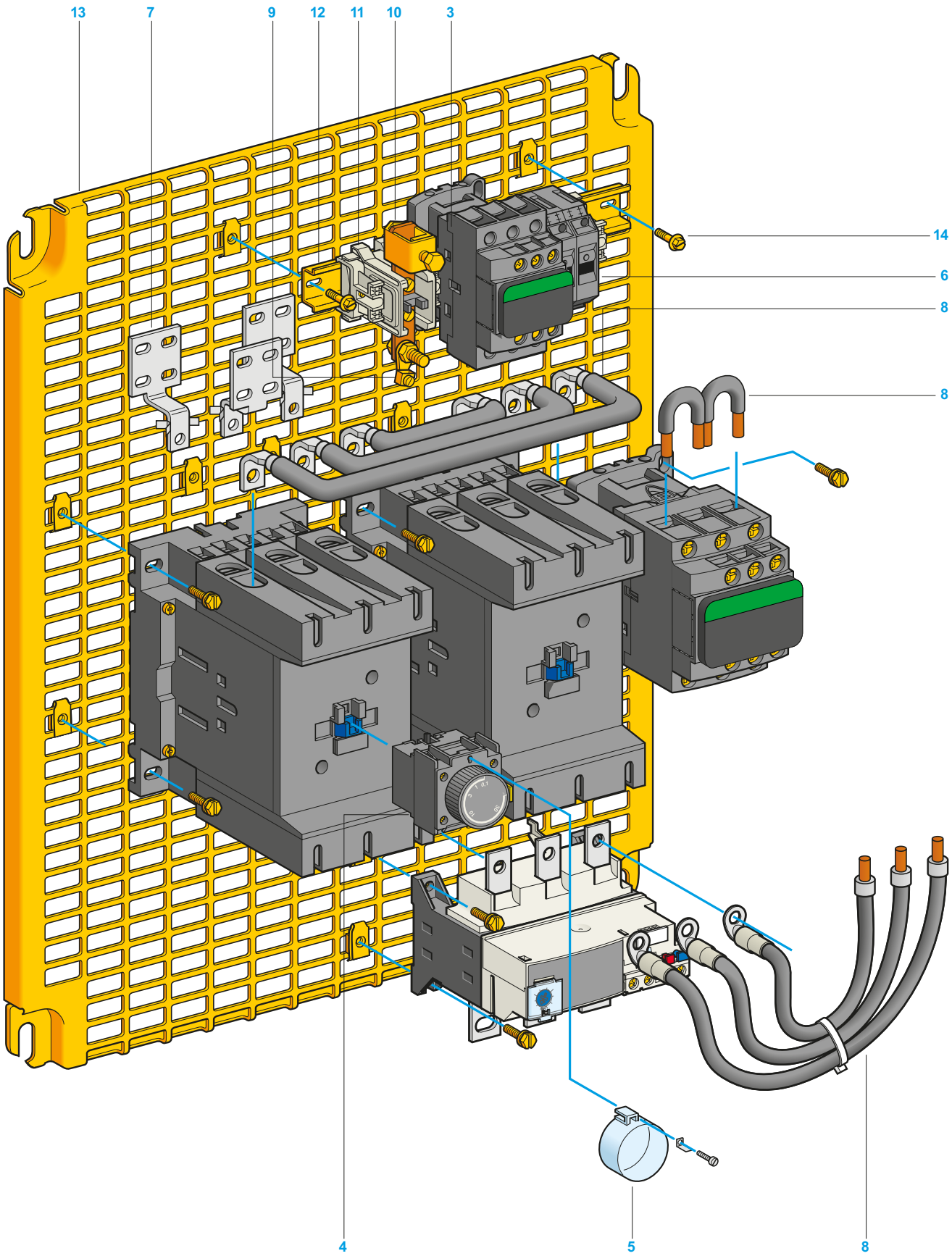
13
7
9
12
11
10
3
14
6
8
8
4
5
8

Product references

Starters for mounting separately from upstream protection

Separate components (continued)

Description	Illustration item no.	For use on	No.	Sold in lots of	Unit reference	Weight kg
Instantaneous auxiliary contact blocks 1 N/O	1	D115 (star)	1	1	**LADN10**	0.020
Control relay	3	D115, D150	1	1	**CAD32**	0.320
Time delay auxiliary contact blocks	4	D115, D150	1	1	**LADT2**	0.060
Lead sealing kit for time delay auxiliary contact blocks	5	D115, D150	1	1	**LA9D901**	0.005
Thermal magnetic circuit breaker for control circuit (200…415 V)	6	D115, D150	2	6	**GB2CB05**	0.060
Set of 3 connectors for wider terminations (optional)	7	D115, D150	1	1	**LA9FG980**	0.200
Set of power connections with fixing accessories	8	D115	1	1	**LA9D11517**	0.800
		D150	1	1	**LA9D15017**	1.050
Spare volt free terminals	9	D115, D150	1	10	**DZ3HA3**	0.007
			2	10	**DZ3GA3**	0.006
Lug-connector terminal block	10	D115, D150	1	10	**AB1BC9535**	0.236
End stop	11	D115, D150	3	100	**AB1AB8M35**	0.005
Mounting rail ⊔ 35 mm	12	D115, D150	1	10	**NSYDPR25**	0.210
Pre-slotted mounting plate	13	D115, D150	1	1	**AM3PA65**	1.950
Screw with captive washer	14	D115, D150	12	100	**AF1VA618**	0.006
			2	100	**AF1VA410**	0.002

(1) Protection must be provided by the addition of a thermal overload relay, to be ordered separately. Select appropriate overload relay for setting at 0.58 of the full load rated motor current, see pages B11/4 and B11/5.

Open motor starters

Introduction: page A2/22
Dimensions: pages A2/23 and A2/24
Schemes: page A2/24

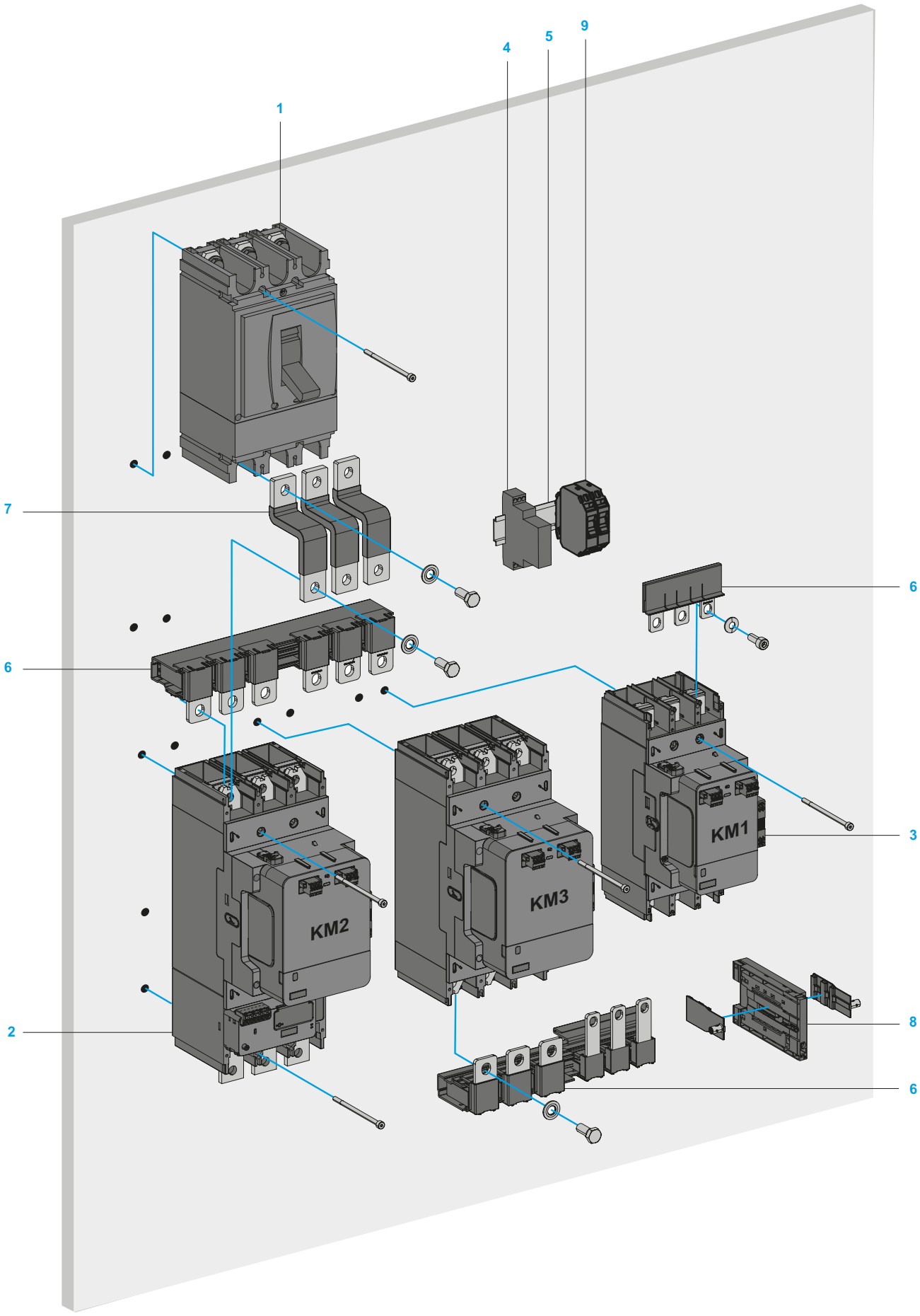
1
4
5
9
7
6
6
KM2
KM3
KM1
3
2
8
6

Star-delta starters with mechanical interlock for customer assembly on back-panel

Maximum operating rate: 30 starts/hour.
Maximum starting time: 30 seconds.
For selection of TeSys Giga Contactors (2), overload relay (3) and circuit breaker (3) at different operating voltages, please refer to coordination tables pages A5/29, A5/38 and A5/39.
For Star-delta 'Power' and 'Control' circuit diagrams, please refer to page A2/26.

Separate components (4)

Description	Illustration item no.	For use on	No.	Sold in lots of	Unit reference
Circuit breakers	1	G115...G500	1	1	**GV5P220…GV6P500**
			1	1	**NSX250...NSX630**
			1	1	**NS800…NS1000**
Electronic thermal overload relays	2	G115...G500	1	1	**LR9G115… LR9G500** (4)
Auxiliary contact blocks 1NO + 1NC	3	G115...G500	3	-	**LAG8N113P** (Supplied with the contactor)
Timer	4	G115...G500	1	1	**RE17RMMWS**
Mounting Rail	5	G115...G500	1	10	**NSYSDR200**
Sets of power connections	6	G115...G500 (LDY) (5)	1	1	**LA9GQQ330**
		G115...G500 (LDY) (5)	1	1	**LA9GSS330**
		G115...G500 (LDY) (5)	1	1	**LA9GTT330**
		LD: G265…G500 (5) Y: G115…G225 (5)	1	1	**LA9GSQ331**
Flexible terminal extensions for MCCB	7	G115…G225	1	1	**LA9G3111**
		G265…G500	1	1	**LA9G3112**
Mechanical interlock kit	8	G115…G500	1	1	**LA9G970**
		G265…G500 # G115…G225	1	1	**LA9G971**
Thermal magnetic circuit breaker for 5 A control circuit	9	G115…G500	2	6	**GB2CB10**

(1) Protection shall be provided by a thermal-magnetic circuit breaker or by a magnetic circuit breaker and an overload relay combination.
(2) The contactors are supplied with wide band AC/DC coils with 1 NO + 1 NC auxiliary contact block. Please refer to pages B9/10 to B9/13 for the complete references of the contactors.
(3) The protection device settings should be adjusted according to motor characteristics and conditions of use.
*(4) Please refer to pages B11/11 to B11/14 for details on **LR9G** electronic overload relays.*
(5) L- Line contactor/ D- Delta contactor/ Y- Star contactor.

Product references

AB1AB8M35	GV2ME06K1BW3	LC3D09AB7
AB1AB8P35	GV2ME06K2BW3	LC3D09AP7
AB1BC15035	GV2ME06K2M7	LC3D115F7A64
AB1BC9535	GV2ME07K1BW3	LC3D115M7A64
ACMGV1084	GV2ME07K2BW3	LC3D115P7
ACMGV763	GV2ME08K1BW3	LC3D115P7A64
ACMGV973	GV2ME08K1P7	LC3D120AP7
AE3FX122	GV2ME10K1BW3	LC3D12AB7
AF1CD061	GV2ME14K1B7	LC3D12AP7
AF1CD081	GV2MP01	LC3D150M7A64
AF1VA410	GV2MP02	LC3D150P7
AF1VA618	GV2MP03	LC3D150P7A64
AF1VC820	GV2MP04	LC3D180AB7
AM3PA65	LA9D11517	LC3D180AP7
CAD32	LA9D115604	LC3D18AB7
GB2CB05	LA9D115692	LC3D18AF7
GB2CB10	LA9D11570	LC3D18AP7
GK2AX50	LA9D115704	LC3D18AU7
GV2AF01	LA9D12974	LC3D320AG7
GV2AF3	LA9D15017	LC3D320AP7
GV2AF4	LA9D5017	LC3D32AB7
GV2DM102BD	LA9D730	LC3D32AF7
GV2DM107BD	LA9D80973	LC3D32AP7
GV2DM107P7	LA9D901	LC3D80B7
GV2DM108B7	LA9GQQ330	LC3D80B7A64
GV2DM108BD	LA9GSS330	LC3D80E7A64
GV2DM108P7	LA9GTT330	LC3D80F7
GV2DM110BD	LA9GSQ331	LC3D80F7A64
GV2DM114B7	LA9G3111	LC3D80M7
GV2DM114BD	LA9G3112	LC3D80P7
GV2DM116BD	LA9G970	LC3D80P7A64
GV2DM132B7	LA9G971	LC3D80U7A64
GV2DM204B7	LAD31	LC3K09P7
GV2DM205BD	LAD91217	LC4D12AP7
GV2DM206BD	LAD91218	LC4D12AV7
GV2DM208BD	LAD93217	LC4D25AB7
GV2DM221M7	LAD93219	LC4D25AP7
GV2DM221P7	LADN10	NSYDPR25
GV2DM232P7	LADN22	NSYSNM6
GV2MC01	LADT2	NSYSNM8
GV2MC02	LAG8N113P	NSYSDR200
GV2MC03	LC3D090AB7	RE17RMMWS
GV2MCK04	LC3D090AP7	

This document is current. Click on the product reference to get the most recent availability status (hyperlink to **se.com** product datasheet). If your product variant is no longer available, please consult your distributor or regional sales office.

Open pre-cabled motor starters

Technical Data for Designers

Contents

Non-reversing / Reversing starters ..... A2/18 to A2/21
Star-delta starters ..... A2/22 to A2/26

Dimensions, mounting

GV2ME●●K●●●

On mounting rail NSYSDR200

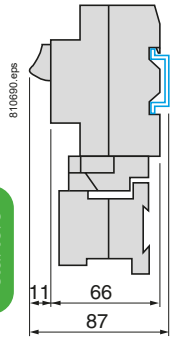

GV2ME●●K1●●

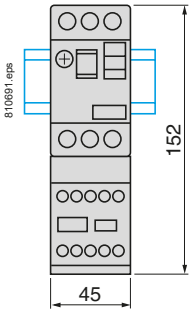

GV2ME●●K2●●

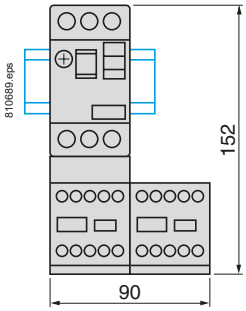

GV2DM●●●●●

On mounting rail NSYSDR200

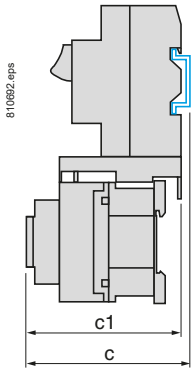

GV2DM1●●●●

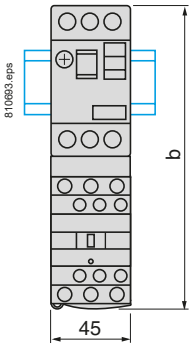

GV2DM2●●●●

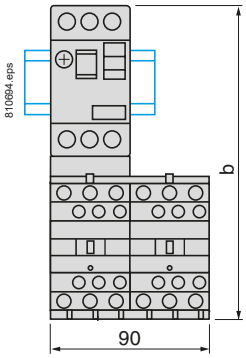

GV2DM●●●●● contactor with AC or DC coil on mounting rail NSYSDR200		
GV2	**DM●02●● to DM●20●●**	**DM●21●● to DM●32●●**
b	177	187
c	106	113
c1	96	103

GV2P●● + LC●D09 + GV2AF3

On mounting rail NSYSDR200

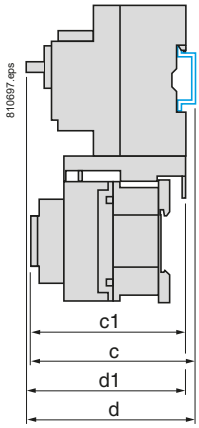

GV2P●● + LC1D●● + GV2AF3

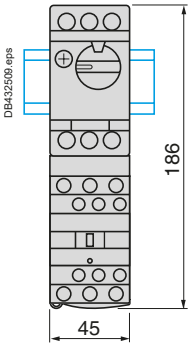

GV2P●● + LC2D●●●● + GV2AF3

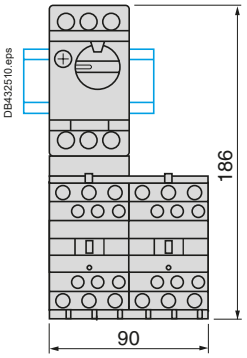

LC1D, LC2D contactor with AC or DC coil on mounting rail		
GV2	**P02 to P08**	**P10 to P32**
c	111	118
c1	101	108
d	107	107
d1	97	97

References:
pages A2/2 to A2/7

Schemes:
pages A2/20 and A2/21

Dimensions, mounting

GV3P●●1 + LC1D40A…D65A (for customer assembly)

Vertical mounting (1)

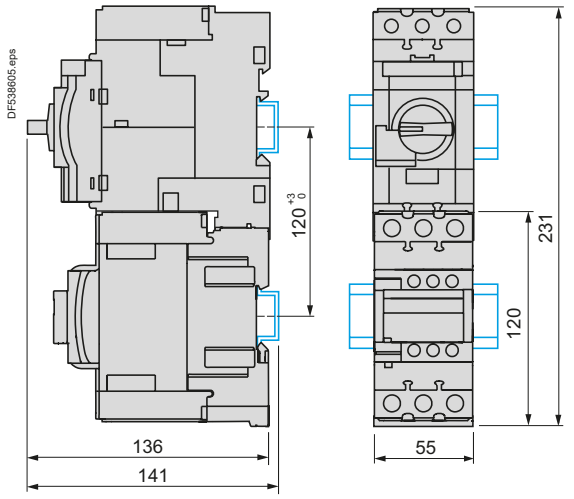

Side by side mounting with S-shape busbar system GV3 S (2)

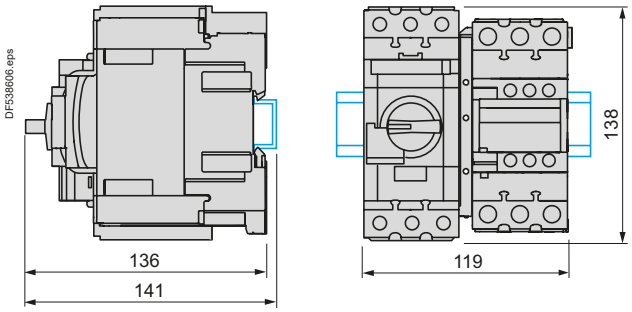

GV3P●●1 + LC2D40A…D65A (for customer assembly)

Vertical mounting (1)

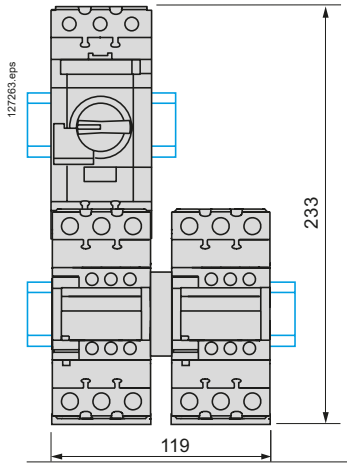

Side by side mounting with S-shape busbar system GV3 S (2)

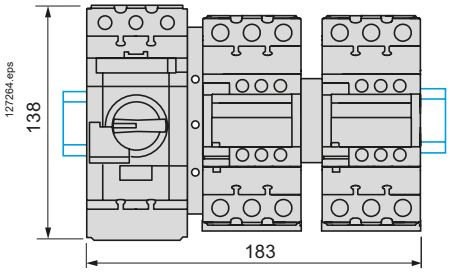

(1) For several side-by-side motor starters, the maximum current allowed is equal to the nominal current under 400 V.
Example: 55 A for a 30 kW motor under 400 V, for a GV3 P65 circuit breaker and a LC1 D65A contactor association.
(2) The maximum current allowed is equal to 90 % of maximum current. Example: 45 A for a LC1 D50A contactor.

References:
pages A2/6 and A2/7

Schemes:
page A2/21

Schemes

GV2ME●●K1●●

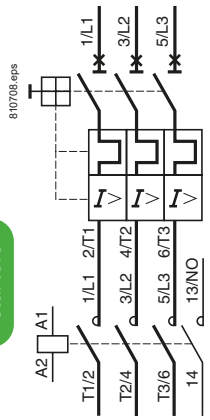

GV2ME●●K2●●

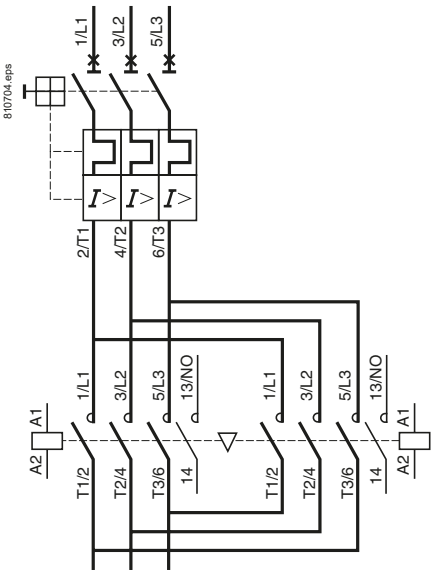

GV2DM1●●●●

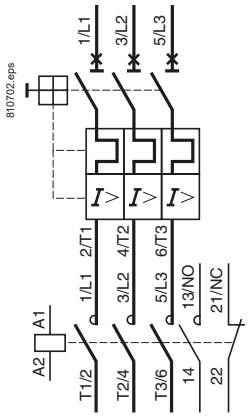

GV2DM2●●●●

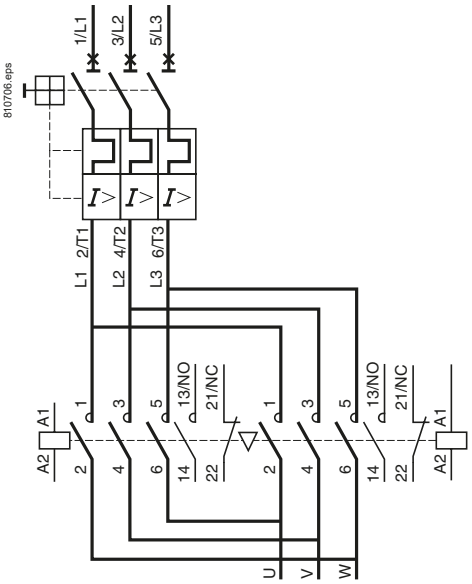

References:
pages A2/2 to A2/5

Dimensions:
page A2/18

Schemes

GV2P●● + LC1D●●●●

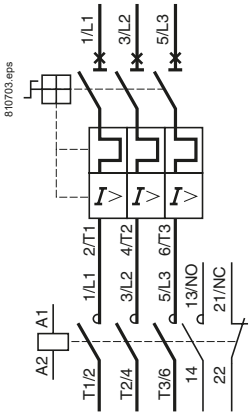

GV2P●● + LC2D●●●●

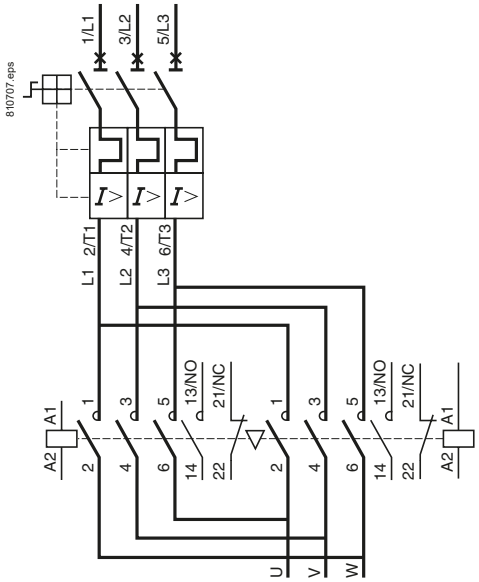

Mechanical interlock with integral electrical contacts

Control circuit ∿

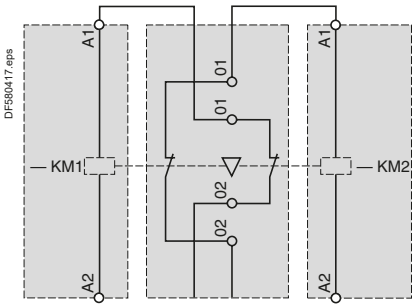

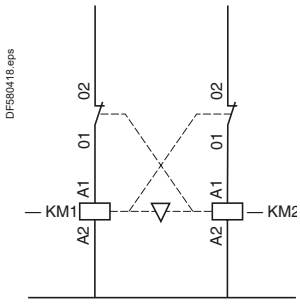

Control circuit ⎓

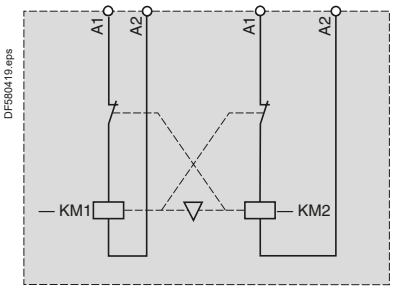

References:
pages A2/6 and A2/7

Dimensions:
pages A2/18 and A2/19

Star-delta starting

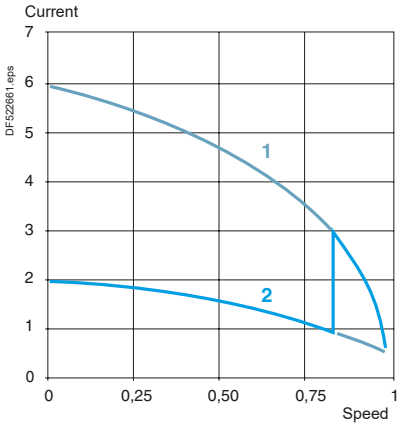

1 Starting in direct delta connection
2 Starting in star connection

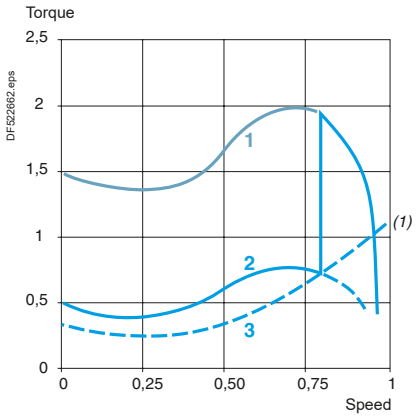

1 Starting in direct delta connection
2 Starting in star connection
3 Resistive torque of the machine

This method of starting is applicable to motors on which all 6 stator terminals are accessible and whose delta connection voltage corresponds to the mains voltage.

Star-delta starting should be used for motors starting on no-load or having a low load torque and gradual build-up:
- the starting torque in star connection is reduced to one third of the direct starting torque, i.e. about 50 % of the rated torque.
- the starting current in star connection is about 1.8 to 2.6 times the rated current.

The transition from star to delta connection must occur when the machine has run up to speed. A too rapid build-up in load torque would cause the stabilised run-up speed to be too low and would therefore eliminate any advantage in this method of starting: this is the case with certain machines whose load torque depends on the machine speed (a characteristic of centrifugal machines, for example).

All star-delta starters are supplied with a special LADS2 or LA2KT2● time delay relay which imposes a delay on the delta contactor during the transition period in order to allow the star contactor sufficient breaking time.

For ratings D115 and D150, this function is performed by a time delay auxiliary contact block LADT2 and a control relay.

(1) Motor manufacturers generally specify machine load torques.
Example: maximum resistive torque on completion of star-delta start (expressed as a proportion of the rated torque).

References:
pages A2/8 to A2/15
Dimensions:
pages A2/23 to A2/25
Schemes:
pages A2/24 and A2/26

Dimensions, mounting

Dimensions

LC3K plate mounted, pre-assembled

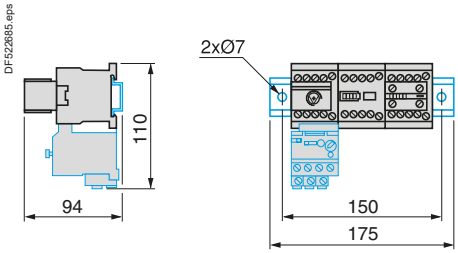

On starters LC3D09A to D18A, a connection block is mounted on the upper part of contactor KM2, increasing the overall height of the product by 6.5 mm.

LC3D09A…D32A pre-assembled or 3 x LC1D09A...D32A (customer assembly) + components

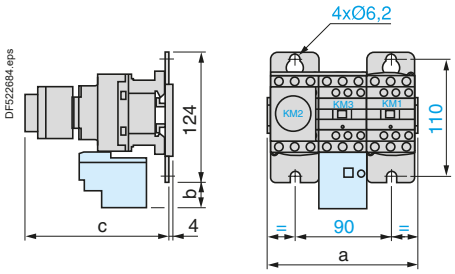

LC3		D09A	D12A	D18A	D32A
a		143	143	144	165
b		26.5	26.5	26.5	32.5
c	with LADS	139	139	139	145
	with LADS and sealing cover	143	143	143	149

LC3D80 pre-assembled or 3 x LC1D80 (customer assembly) + components

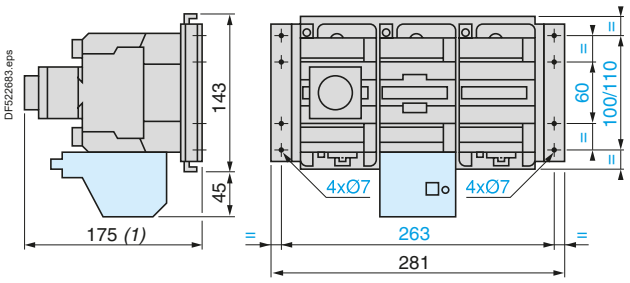

(1) +4 mm with sealing cover

LC3D115, D150 pre-assembled or 3 x LC1D115...D150 (customer assembly) + components

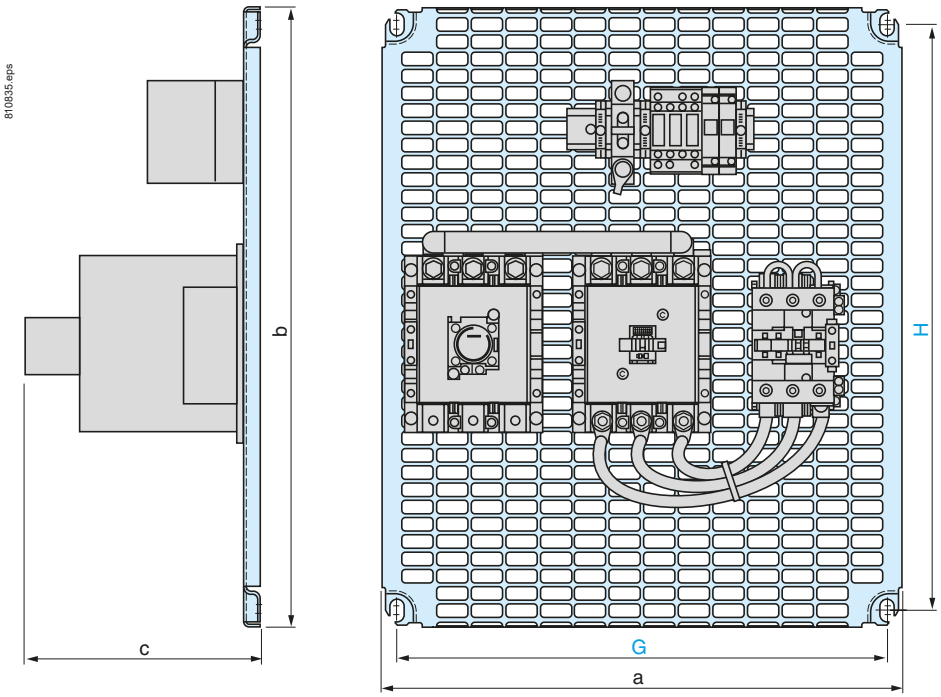

		a	b	c	G	H
LC3D115 or 3 x LC1D with components	D115	450	555	205	425	525
LC3D150 or 3 x LC1D with components	D150	450	555	205	425	525

References:
pages A2/8 to A2/13

Introduction:
page A2/22

Schemes:
page A2/24

Dimensions

LC3D090A à D320A on NSYSDR mounting rail, pre-assembled

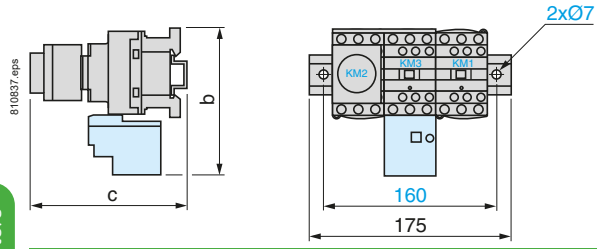

LC3		D090A à D180A	D320A
b		153	137
c	with LADS	139	145
	with LADS and sealing cover	143	149

Schemes

LC3K, LC3D09A to D80 LC3D090A to D320A

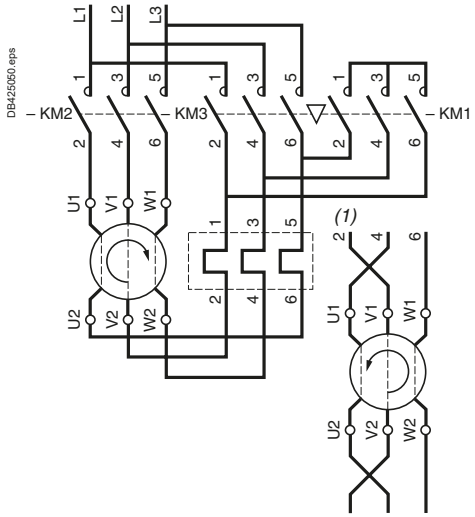

LC3K

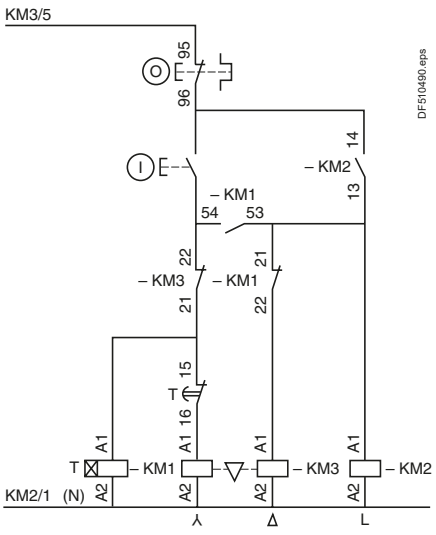

LC3D

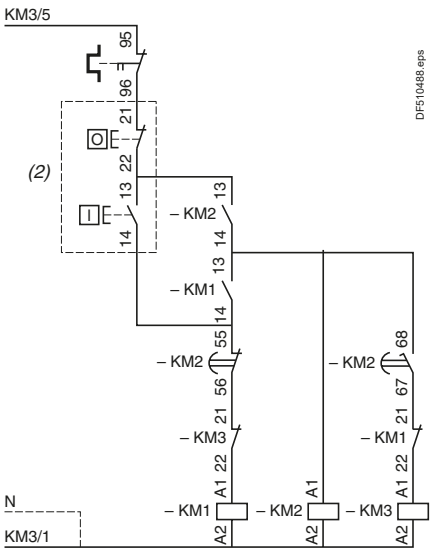

Note: LC3D09A to D18A: Mechanical interlock between KM3 and KM1.

LC3D115 and D150

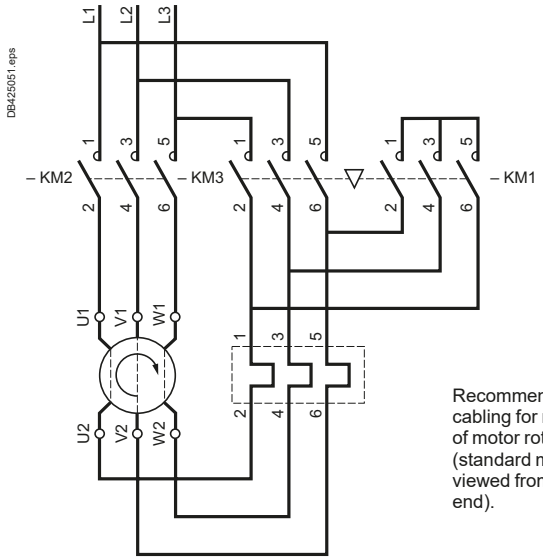

Recommended cabling for reversal of motor rotation (standard motor, viewed from shaft end).

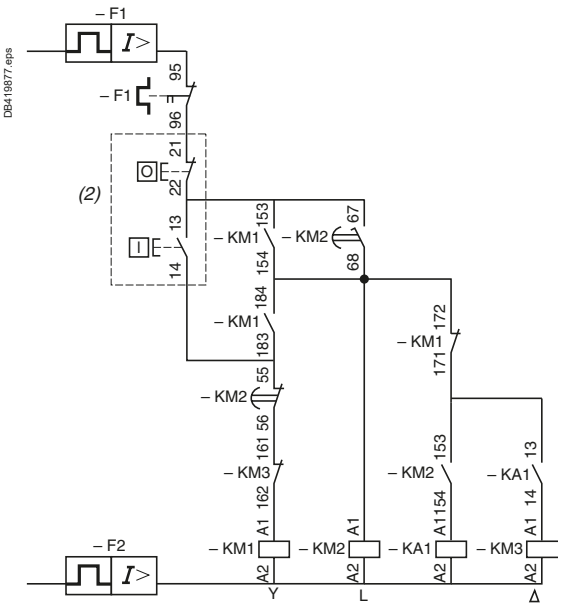

(1) Recommended cabling for reversal of motor rotation (standard motor, viewed from shaft end).
(2) Remote control.

References:
pages A2/8 to A2/13

Dimensions:
page A2/23

Life Is On Schneider Electric

Dimensions

Star-delta starters with mechanical interlock for customer assembly on back-panel

DB439476.eps

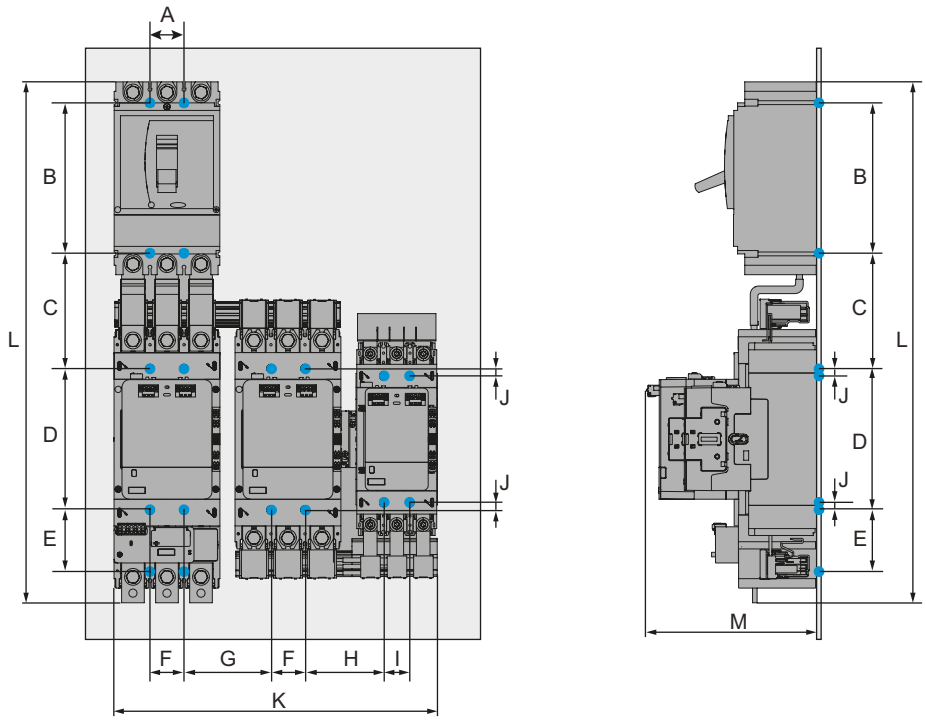

Circuit Breaker	Line & Delta Contactor	Star Contactor	Overload relay	A	B	C	D	E	F	G	H	I	J	Overall width K	Overall height L	Overall depth M
NSX250	LC1G115 …225	LC1G115 …225	LR9G115/ LR9G225	35	125	87	166	79.15	35	92.7	92.7	35	0	364	523	193
NSX400/ NSX630	LC1G115 …225	LC1G115 …225	LR9G115/ LR9G225	45	200	118	166	79.15	35	92.7	92.7	35	0	364	565.5	193
NSX400/ NSX630	LC1G265 …500	LC1G115 …225	LR9G500	45	200	118	187	81.85	45	115	103.85	35	10.5	428	670	225
NSX400/ NSX630	LC1G265 …500	LC1G265 …500	LR9G500	45	200	118	187	81.85	45	115	115	45	0	463	670	225
NS800	LC1G265 …500	LC1G115 …225	LR9G500	199	200	217	187	81.85	45	115	103.85	35	10.5	428	804.6	225
NS800	LC1G265 …500	LC1G265 …500	LR9G500	199	200	217	187	81.85	45	115	115	45	0	463	804.6	225

Note: *All dimensions are in mm.*

References:
pages A2/14 and A2/15

Introduction:
page A2/22

Schemes:
page A2/26

Star-Delta motor ‘Power’ circuit diagram

Thermal magnetic circuit breaker + contactors

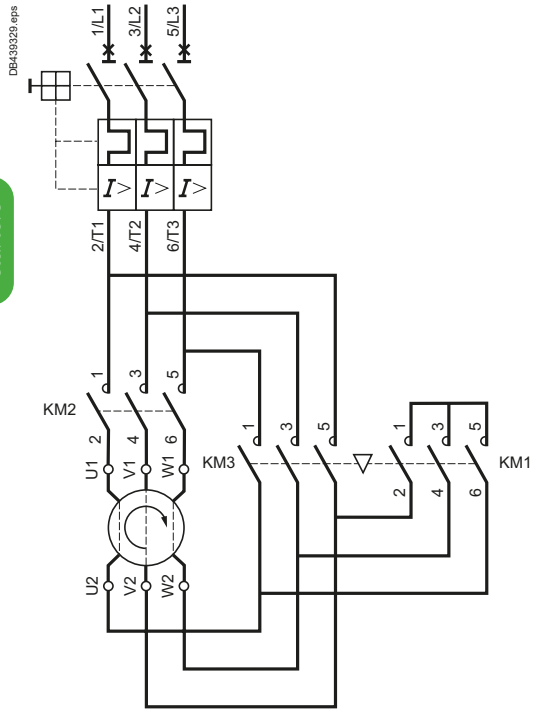

Magnetic circuit breaker + contactors + overload relay

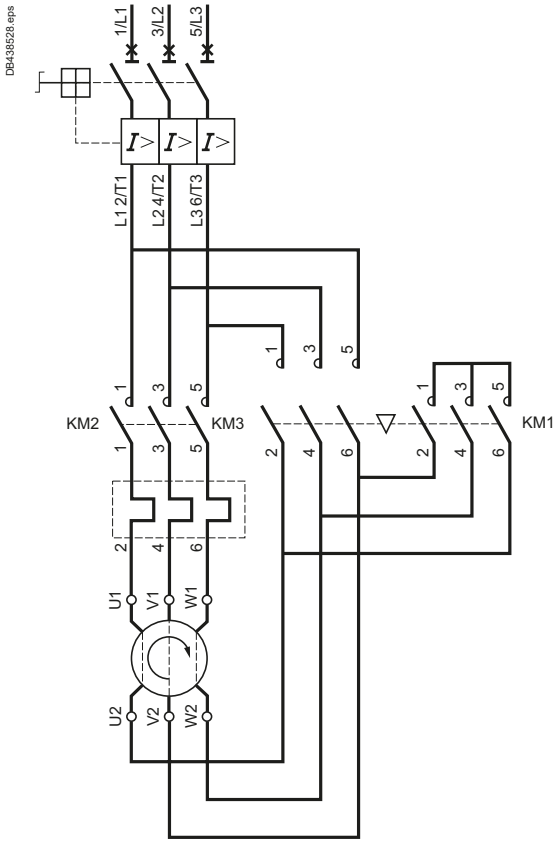

Star-Delta Motor ‘Control’ circuit diagram

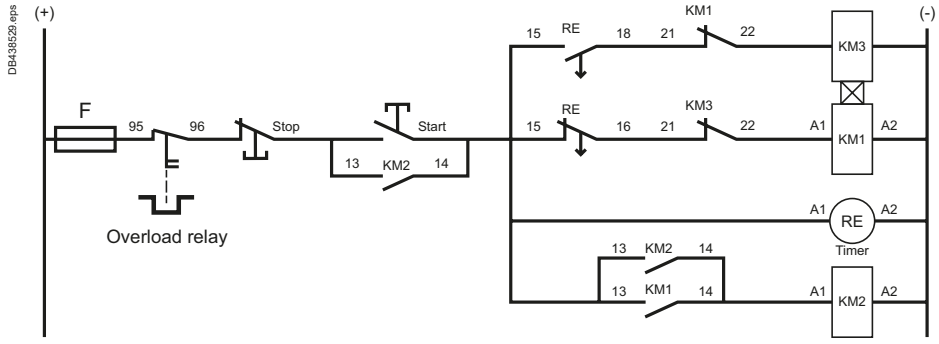

Recommended timing relay (RE): Zelio Timer ref. **RE17RMMWS** (12...240 V AC/DC 50/60 Hz – 8 A AC/DC contacts)

References:
pages A2/14 and A2/15

Introduction:
page A2/22

Dimensions:
page A2/25

TeSys Control
Hybrid motor starters

Chapter A3

Introduction A3/2

TeSys Hybrid motor starters

Type of product	Range		Page
Ultra-compact starters IEC ratings Standard starters, screw or spring terminals, direct-on-line or reverse Safety starters, screw or spring terminals, direct-on-line or reverse	Up to 3 kW AC53a Up to 9 A AC51		A3/6
Ultra-compact starters UL ratings Standard starters, screw or spring terminals, direct-on-line or reverse Safety starters, screw or spring terminals, direct-on-line or reverse	Up to 3 hp AC53a Up to 9 A AC51		A3/7
TeSys Deca Circuit breakers for a group of starters Selection of magnetic motor circuit breakers TeSys GV2L – rotary knob TeSys GV2LE – rocker lever	Up to 32 A		A3/8

Technical Data for Designers A3/11

The most compact 3 KW / 400 V starter in the world



Up to 75 % of space reduction

- Ultra-compact 22.5 mm starter
- Reversing starter in the same width
- Maximum space savings for group starter architecture

Long electrical durability

- Suitable for high demanding application
- 30 000 000 of AC53a electrical cycles

> With printed QR code, refering directly to the product data sheet.

Easy Design

- Wide range setting motor protection
- Automatic, manual or remote reset after thermal trip
- Wide range of control voltage

Easy to integrate

- Direct mounting installation on DIN rail
- Control terminals on the upper side
- Power terminal on the lower side

Introduction

Standard version

- 2 ratings:
  - 2.4 A 400 V AC53a
  - 6.5 A 400 V AC53a
- 2 control voltages:
  - 24 V DC
  - 110 V / 230 V AC
- 2 terminal types:
  - Screw clamps
  - Spring
- Can provide up to 3 functions:
  - Forward running
  - Reverse running
  - Overload protection









Safety version

- Safe Torque Off embedded:
  - SIL3 according to IEC61508-1
  - Ple according to ISO13849-1
- ATEX:
  - As associated devices for motor protection

> Hybrid motor starters are a solution dedicated to low footprint applications, in industries as food and beverage, logistics, and durable goods.



Conventional ..... OR ..... Hybrid Standard starter



Direct-on-line



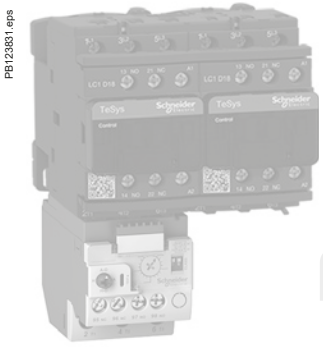

Reverse



> How does the hybrid technology work ?

Hybrid technology:

Each contact is coupled with a power semiconductor for switching

> Higher number of on/off switches, extended durability.

> Closing

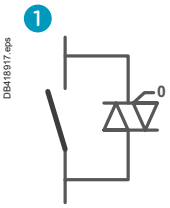



Start: conduction through the semiconductor.



Contact closure under zero voltage. No electrical arc: the contact is preserved.

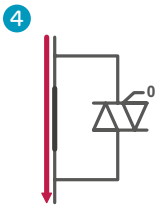

The semiconductor is non-conducting.

> Opening

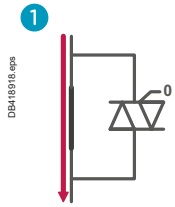

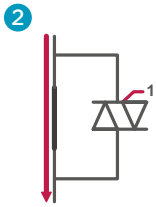

Before the opening of the contact the semiconductor is triggered.

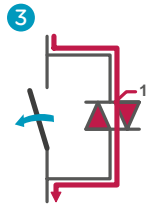

Contact opening:
- no arc: the contact is preserved.

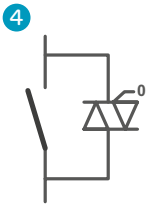

Stop: the semiconductor becomes non-conducting.

Conventional ..... OR ..... Hybrid Safety starter

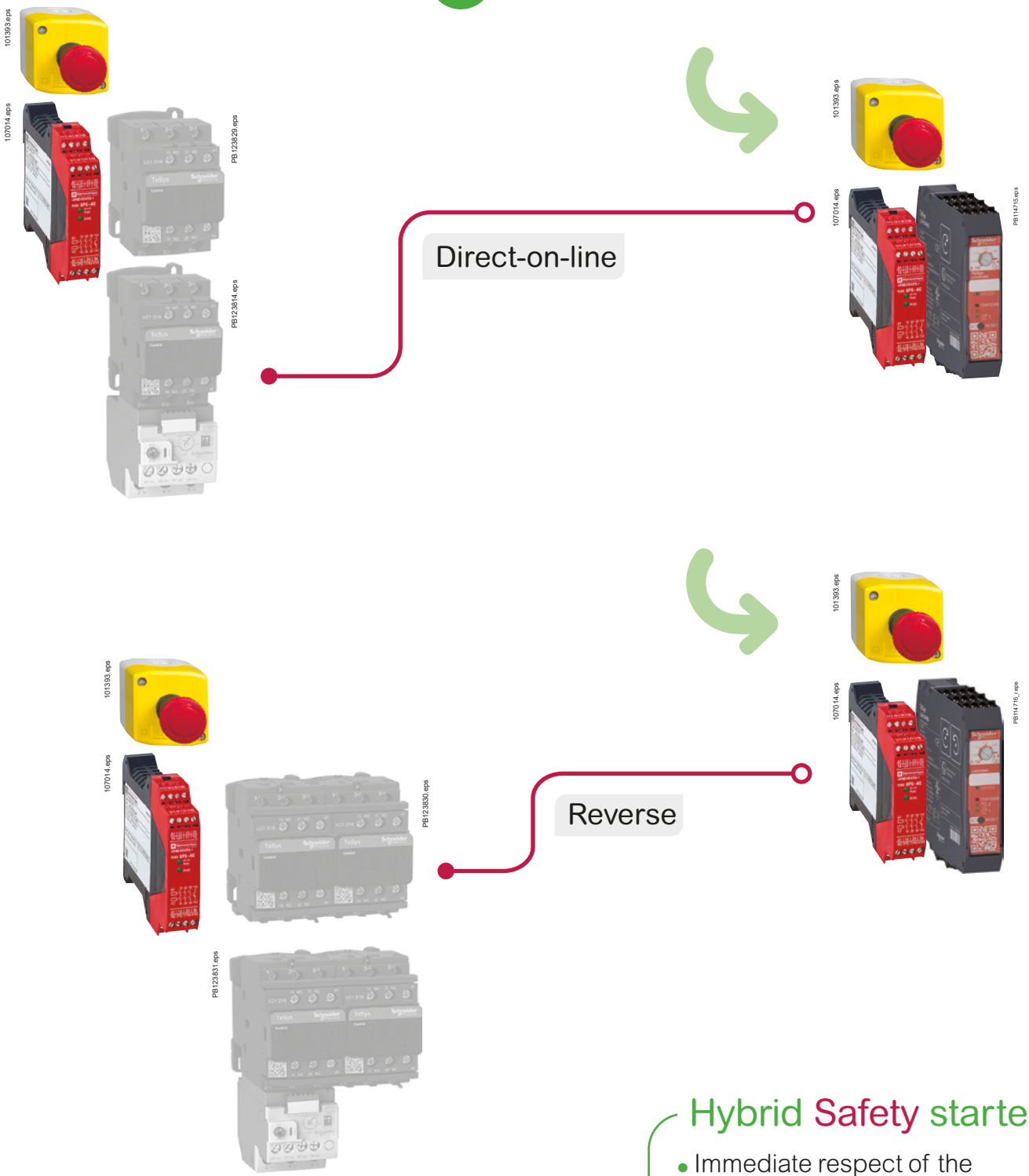

Hybrid Safety starter

- Immediate respect of the **highest safety standards**
- Simplified design of your **safety electrical architecture**
- **Quicker** panel implementation

PB114711.eps



LZ1H2X4BD

Starters for asynchronous motors - AC53a utilization category:

Standard starters hybrid per IEC ratings

Starters	3- phases motor: max power (KW) for various voltage							Current range	Commercial references (1)
	220 V	230 V	380 V	400 V	415 V	440 V	500 V	A	
Direct-on-line									
Screw terminals	0.37	0.37	0.75	0.75	0.75	0.75	1.1	0.18...2.4	**LZ1H2X4●●**
	1.5	1.5	2.2	3	3	3	3	1.5...6.5	**LZ1H6X5●●**
Spring terminals	0.37	0.37	0.75	0.75	0.75	0.75	1.1	0.18...2.4	**LZ1H2X43●●**
	1.5	1.5	2.2	3	3	3	3	1.5...6.5	**LZ1H6X53●●**
Reverse									
Screw terminals	0.37	0.37	0.75	0.75	0.75	0.75	1.1	0.18...2.4	**LZ2H2X4●●**
	1.5	1.5	2.2	3	3	3	3	1.5...6.5	**LZ2H6X5●●**
Spring terminals	0.37	0.37	0.75	0.75	0.75	0.75	1.1	0.18...2.4	**LZ2H2X43●●**
	1.5	1.5	2.2	3	3	3	3	1.5...6.5	**LZ2H6X53●●**

(1) Remplace the ●● in the reference by the bobine code: BD (24 V DC) or FU (110-230 V AC).

PB114715.eps



LZ7H2X4BD

Safety starters hybrid per IEC ratings

Starters	3- phases motor: max power (KW) for different tensions							Current range	Commercial references (1)
	220 V	230 V	380 V	400 V	415 V	440 V	500 V	A	
Direct-on-line									
Screw terminals	0.37	0.37	0.75	0.75	0.75	0.75	1.1	0.18...2.4	**LZ7H2X4●●**
	1.5	1.5	2.2	3	3	3	3	1.5...6.5	**LZ7H6X5●●**
Spring terminals	0.37	0.37	0.75	0.75	0.75	0.75	1.1	0.18...2.4	**LZ7H2X43●●**
	1.5	1.5	2.2	3	3	3	3	1.5...6.5	**LZ7H6X53●●**
Reverse									
Screw terminals	0.37	0.37	0.75	0.75	0.75	0.75	1.1	0.18...2.4	**LZ8H2X4●●**
	1.5	1.5	2.2	3	3	3	3	1.5...6.5	**LZ8H6X5●●**
Spring terminals	0.37	0.37	0.75	0.75	0.75	0.75	1.1	0.18...2.4	**LZ8H2X43●●**
	1.5	1.5	2.2	3	3	3	3	1.5...6.5	**LZ8H6X53●●**

(1) Remplace the ●● in the reference by the bobine code: BD (24 V DC) or FU (110-230 V AC).

Starters for resistive load AC51 utilization category:

Starters	Resistive load current	Application	Commercial references (1)
	A		
Screw terminals	2.4	Standard	**LZ1H2X4●●**
		Safety	**LZ7H2X4●●**
	9	Standard	**LZ1H6X5●●**
		Safety	**LZ7H6X5●●**
Spring terminals	2.4	Standard	**LZ1H2X43●●**
		Safety	**LZ7H2X43●●**
	9	Standard	**LZ1H6X53●●**
		Safety	**LZ7H6X53●●**

(1) Remplace the ●● in the reference by the bobine code: BD (24 V DC) or FU (110-230 V AC).

PB114713.eps



LZ1H2X43BD

Starters for asynchronous motors - AC53a utilization category:

Standard starters hybrid per UL ratings

Starters	3- phases motor in HP			Current range	Commercial references (1)
	208 V	220 V - 240 V	440 V - 480 V	A	
Direct-on-line					
Screw terminals	1/2	1/2	1	0.18...2.4	**LZ1H2X4●●**
	1	1.5	3	1.5...6.5	**LZ1H6X5●●**
Spring terminals	1/2	1/2	1	0.18...2.4	**LZ1H2X43●●**
	1	1.5	3	1.5...6.5	**LZ1H6X53●●**
Reverse					
Screw terminals	1/2	1/2	1	0.18...2.4	**LZ2H2X4●●**
	1	1.5	3	1.5...6.5	**LZ2H6X5●●**
Spring terminals	1/2	1/2	1	0.18...2.4	**LZ2H2X43●●**
	1	1.5	3	1.5...6.5	**LZ2H6X53●●**

(1) Remplace the ●● in the reference by the bobine code: BD (24 V DC) or FU (110-230 V AC).

PB114716.eps



LZ8H6X5BD

Safety starters hybrid per UL ratings

Starters	3- phases motor in HP			Current range	Commercial references (1)
	208 V	220 V - 240 V	440 V - 480 V	A	
Direct-on-line					
Screw terminals	1/2	1/2	1	0.18...2.4	**LZ7H2X4●●**
	1	1.5	3	1.5...6.5	**LZ7H6X5●●**
Spring terminals	1/2	1/2	1	0.18...2.4	**LZ7H2X43●●**
	1	1.5	3	1.5...6.5	**LZ7H6X53●●**
Reverse					
Screw terminals	1/2	1/2	1	0.18...2.4	**LZ8H2X4●●**
	1	1.5	3	1.5...6.5	**LZ8H6X5●●**
Spring terminals	1/2	1/2	1	0.18...2.4	**LZ8H2X43●●**
	1	1.5	3	1.5...6.5	**LZ8H6X53●●**

(1) Remplace the ●● in the reference by the bobine code: BD (24 V DC) or FU (110-230 V AC).

Starters for resistive load AC51 utilization category:

Starters	Resistive load current	Application	Commercial references (1)
	A		
Screw terminals	2.4	Standard	**LZ1H2X4●●**
		Safety	**LZ7H2X4●●**
	9	Standard	**LZ1H6X5●●**
		Safety	**LZ7H6X5●●**
Spring terminals	2.4	Standard	**LZ1H2X43●●**
		Safety	**LZ7H2X43●●**
	9	Standard	**LZ1H6X53●●**
		Safety	**LZ7H6X53●●**

(1) Remplace the ●● in the reference by the bobine code: BD (24 V DC) or FU (110-230 V AC).

Hybrid motor starters

Selection table

PB121671_Reps



PB114721_reps PB114721_reps PB114721_reps PB114721_reps



GV2L + LZ2H2X4BD

Magnetic motor circuit breakers:
- GV2L: rotary knob type - Ue = 500 V
- GV2LE: rocker lever type - Ue = 415 V.

Selection of the circuit breaker
Type 1 coordination according to IEC/EN 60947-4-2

Max	Iq	Number of H		Reference Circuit breaker	
		2.4 A	6.5 A	Rotary	Rocker
A	kA				
0.4	50.0	1	–	**GV2L03**	**GV2LE03**
0.63	50.0	1	–	**GV2L04**	**GV2LE04**
1	50.0	1	1	**GV2L05**	**GV2LE05**
1.6	50.0	1	1	**GV2L06**	**GV2LE06**
2.5	35.0	1	1	**GV2L07**	**GV2LE07**
4	12.5	1	1	**GV2L08**	**GV2LE08**
6.3	8.0	2	1	**GV2L10**	**GV2LE10**
10	7.0	4	1	**GV2L14**	**GV2LE14**
14	5.0	5	2	**GV2L16**	**GV2LE16**
18	4.0	7	2	**GV2L20**	**GV2LE20**
25	4.0	10	3	**GV2L22**	**GV2LE22**
32	3.0	13	4	**GV2L32**	**GV2LE32**

Product references

LZ1H2X43BD	**LZ7H2X43BD**
LZ1H2X43FU	**LZ7H2X43FU**
LZ1H2X4BD	**LZ7H2X4BD**
LZ1H2X4FU	**LZ7H2X4FU**
LZ1H6X53BD	**LZ7H6X53BD**
LZ1H6X53FU	**LZ7H6X53FU**
LZ1H6X5BD	**LZ7H6X5BD**
LZ1H6X5FU	**LZ7H6X5FU**
LZ2H2X43BD	**LZ8H2X43BD**
LZ2H2X43FU	**LZ8H2X43FU**
LZ2H2X4BD	**LZ8H2X4BD**
LZ2H2X4FU	**LZ8H2X4FU**
LZ2H6X53BD	**LZ8H6X53BD**
LZ2H6X53FU	**LZ8H6X53FU**
LZ2H6X5BD	**LZ8H6X5BD**
LZ2H6X5FU	**LZ8H6X5FU**

This document is current. Click on the product reference to get the most recent availability status (hyperlink to **se.com** product datasheet). If your product variant is no longer available, please consult your distributor or regional sales office.

Technical Data for Designers

Contents

Description ..... A3/12 to A3/13
Characteristics..... A3/14 to A3/15
Curves ..... A3/16 to A3/17
Dimensions and schemes A3/18

Identification of terminals / Indicators / Setting means and procedure

Setting procedure

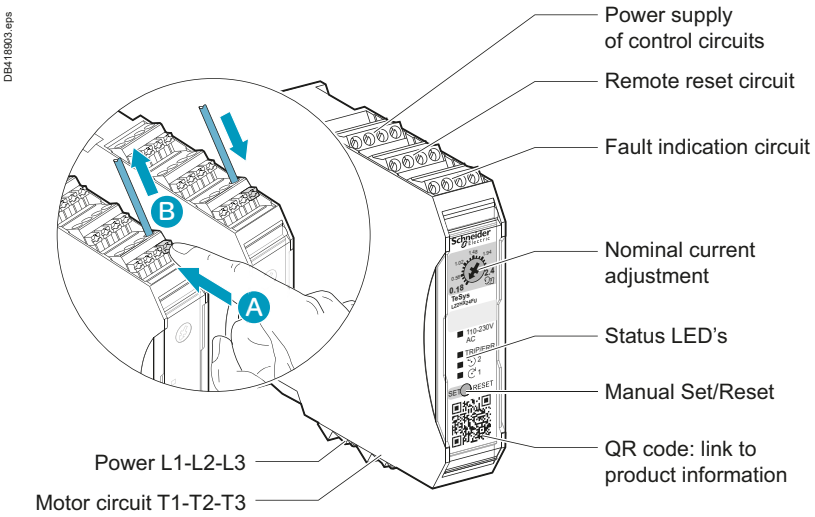

STEP	ACTION
1	Lift the cover on the front of the Hybrid motor starter to access the SET/RESET button.
2	Press and hold down the SET/RESET button for at least 6 seconds. After 6 seconds the 110-230 V AC or 24 V DC LED flashes once.
3	After the LED has flashed once, release the SET/RESET button.
4	Turn the potentiometer to select a nominal current, and then fine-tune the position until the LEDs indicate the exact nominal current.
5	Press the SET/RESET button to save the selected nominal current. The 110-230 V AC or 24 V DC LED comes on and the other LEDs go off.
6	Drop the cover back over the front of the Hybrid motor starter.

Protection functions

The protection of three - phase motors is ensured against potential faults

- Thermal overload: the motor currents exceed the set value.
- Phase unbalanced: the motor currents differ from each other by more than 33 %
- Phase loss: power missing on one or several phases
- Stall and jam: motor current exceeding 45 A for more that 2 s during starting or running phase - No motor is connected - Motor current is lower that the minimum configurable current for more than 2 seconds, on at least two phases.

For all this detected situations, the Hybrid motor starter will switch off, activate its TRP/ERR LED and fault signaling contact.

Please refer to the “Instruction sheet and User Guide” for more information.

Electrical diagrams for Safety chain applications

Preferred

Electrical life time: 30000000 AC53a electrical cycles

Safety Chain Application for Monitoring Emergency STOP Circuits with Two Channel Inputs and Two Channel Outputs with Preventa XPSAF Safety Processing Device.

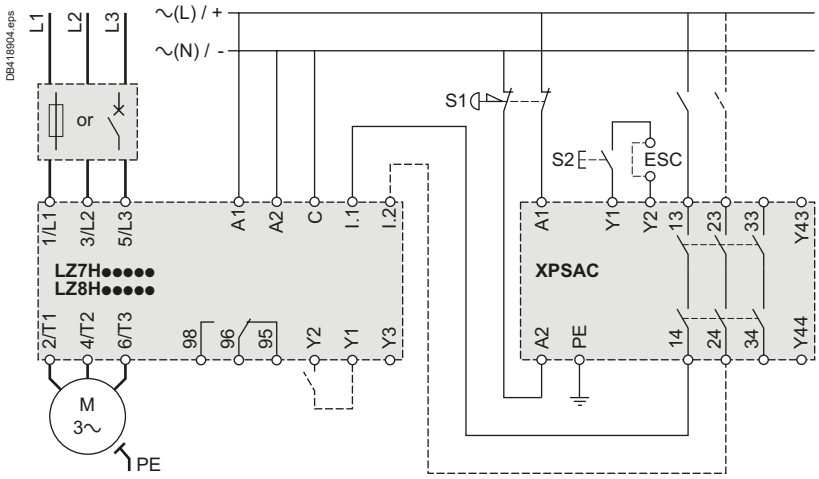

Possible but non- recommended

Electrical life time: 10000 AC53 a electrical cycles

Safety Chain Application for Monitoring Emergency Stop Circuits with Two Channel Inputs and Two Channel Outputs with Preventa XPSAC Safety Processing Device.

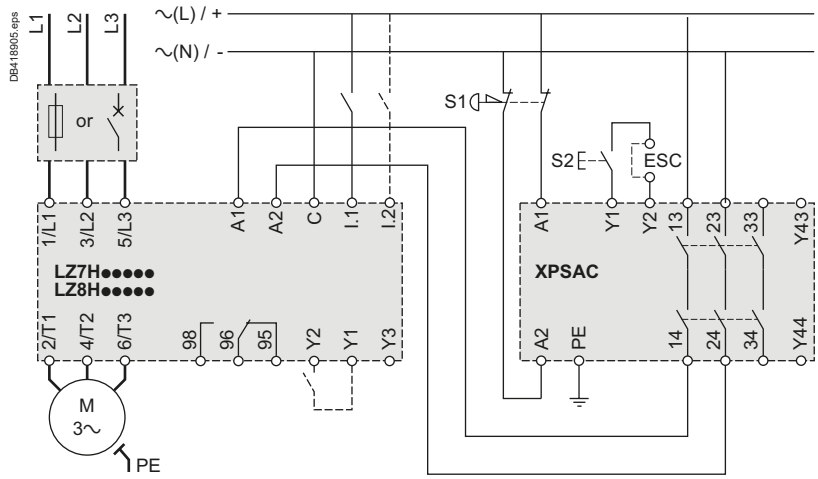

Hybrid motor starters
Ref.

Characteristics

Environment

Rated insulation voltage (Ui)	Conforming to IEC/EN 60947-1, overvoltage category III, degree of pollution: 2	**V**	500
Rated impulse withstand voltage (Uimp)	Conforming to IEC/EN 60947-4-2	**kV**	6 (24 V DC control voltage); 4 (110 V - 230 V AC control voltage)
Conforming to standards			IEC / EN 60947-4-2
Product certifications			CE, CUL, ATEX (for failsafe product), CCC, UKCA
Degree of protection	Conforming to IEC / EN 60947-1		IP20
Environment category	Conforming to IEC / EN 60947-1		E
Climatic withstand			Conforming to IEC/EN 60068-2-30
Ambient air temperature around the device	Storage	**°C**	-40…+80
	Operation (see derating curves)	**°C**	-25…+70
Maximum operating altitude	without derating	**m**	2000
	with derating	**m**	No
Operating positions (see derating curves)	Vertical axis (horizontal DIN rail)		Yes
	Horizontal axis (vertical DIN rail)		Not authorised
Shock resistance 1/2 sine wave = 18 ms	Conforming to IEC/EN 60068-2-27	**gn**	30 Starter OFF
		gn	30 Starter ON
Vibration resistance 10…150 Hz	Conforming to IEC/EN 60068-2-6	**gn**	5 Starter OFF
		gn	5 Starter ON
Resistance to electrostatic discharge	Conforming to IEC/EN 61000-4-2	**kV**	Air discharge: 8 kV
		kV	Contact discharge: 6 kV
Immunity to radiated high-frequency disturbance	Conforming to IEC/EN 61000-4-3		
	80 - 1 GHz	**V/m**	20
	1.0 - 6 GHz	**V/m**	10
Immunity to fast transient currents	Conforming to IEC/EN 61000-4-4	**kV**	3
Immunity to conducted high frequency disturbances	Conforming to IEC/EN 61000-4-6	**V**	10
Radiated emission and conducted	Conforming to CISPR 11 and EN 55011		Class A
Surge	Conforming to IEC/EN 61000-4-5	**kV**	1 symmetrical
		kV	2 asymmetrical

Control circuit characteristics

Rated voltage	∼ 50/60 Hz	**V**	110 - 230
	⎓	**V**	24
Voltage limits	∼ 50/60 Hz	**V**	85…253
	⎓	**V**	19.2…30
Voltage dips		**ms**	3
Short time interruptions		**ms**	3

Power circuit characteristics

			LZ●2X4●●	LZ●6X5●●
Power disipation for corresponding Rated Operating Current (see derating curve)		**W**	0.88 … 4.1	0.88 … 7
Rated Operating Current	AC51 conforming to IEC/EN 60947-4-3	**A**	0.18 - 2.4	1.5 - 9
	AC53a conforming to IEC/EN 60947-4-2	**A**	0.18 - 2.4	1.5 - 6.5
Electrical life	AC51	**Op**	30 000 000 (1)	
		Op	10 000 (2)	
	AC53A	**Op**	30 000 000 (1)	
		Op	10 000 (2)	
Maximum Operating rate	AC51	**Op/h**	7200	
	AC53A		See curves	
Time to restart after overload trip	Manual or remote mode	**mn**	2	
	Automatic	**mn**	20	

Power and control terminal Characteristics

	Terminal type		Screw M3	Push in
Flexible cable without cable end	1 conductor	**mm²**	0.25…2.5	0.25…2.5
	2 conductors	**mm²**	0.25…0.75	
Flexible cable with cable end	1 conductor	**mm²**	0.25…2.5	0.25…2.5
	2 conductors	**mm²**	0.25…1.5	0.25…1.5
Solid cable without cable end	1 conductor	**mm²**	0.25…2.5	0.25…2.5
	2 conductors	**mm²**	0.25…0.75	
Screwdriver		**mm**	flat screwdriver: 3 mm	
Tightening torque		**N.m**	0.5..0.6	

(1) With ON/OFF control through control inputs (I_1, I_2 terminals) *(2) With ON/OFF control through power supply (A_1, A_2 terminals).*

References: pages A3/6 and A3/7
Description: pages A3/12 and A3/13
Curves: pages A3/16 and A3/17
Dimensions, schemes: page A3/18

Life Is On Schneider Electric

Characteristics

System conditons

Database for failure rates		SN 29500
System type		Type B
Standard used		IEC 61508
Beta factor		1 %
Mean time to failure (MTTF) at an ambient temperature 40 °C		39.3 (LZ7H or LZ8H 24 V DC) 39.1 (LZ7H or LZ8H 110/230 V AC)

Safe torque-off

		LZ7H or LZ8H 24 V DC	LZ7H or LZ8H 110/230 V AC
Ambient temperature	°C	40	40
Mean time to failure (MTTF)		517	289
Switch-off time		80	100
λsd [FIT] safe, detectable		664	638
λsu [FIT] safe, undetectable		968	935
λdd [FIT] dangerous, detectable		218	388
λdu [FIT] dangerous, undetectable		2.67	6.82
SFF [%] Safe failure fraction		99	99
DCS [%] Diagnostic coverage safe		40.7	40.6
DC [%] Diagnosctic coverage		98	98
PFH Probability of dangerous failure per hour		2.67×10^{-9}	6.82×10^{-9}
Safety level		IEC/CEI 61508-1: SIL 3 ISO 13849-1: Category 3 PL e EN 60954-1: Category 3	

Motor overload protection

		LZ7H or LZ8H 24 V DC	LZ7H or LZ8H 110/230 V AC
Ambient temperature	°C	40	40
Mean time to failure (MTTF)		447	273
Time to trip		As for Class 10 A, IEC/CEI 60947-4-2	
λsd [FIT] safe, detectable		637	636
λsu [FIT] safe, undetectable		870	841
λdd [FIT] dangerous, detectable		239	402
λdu [FIT] dangerous, undetectable		17	17
SFF [%] Safe failure fraction		99	99
DCS [%] Diagnostic coverage safe		42.3	43.1
DC [%] Diagnosctic coverage		93	95
Safety level		IEC/CEI 61508-1: SIL 2	

Curves

Overload protection tripping curve at 20 °C

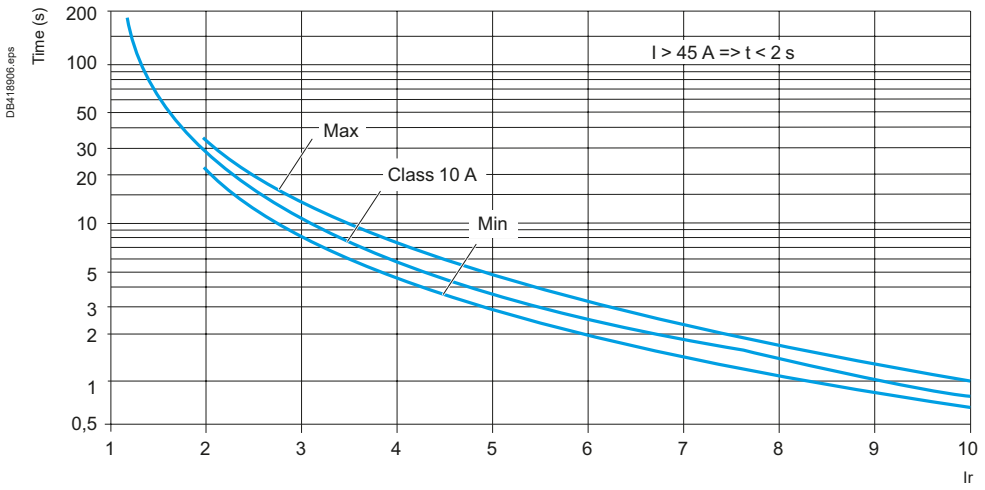

Derating curves: maximum load current (In)

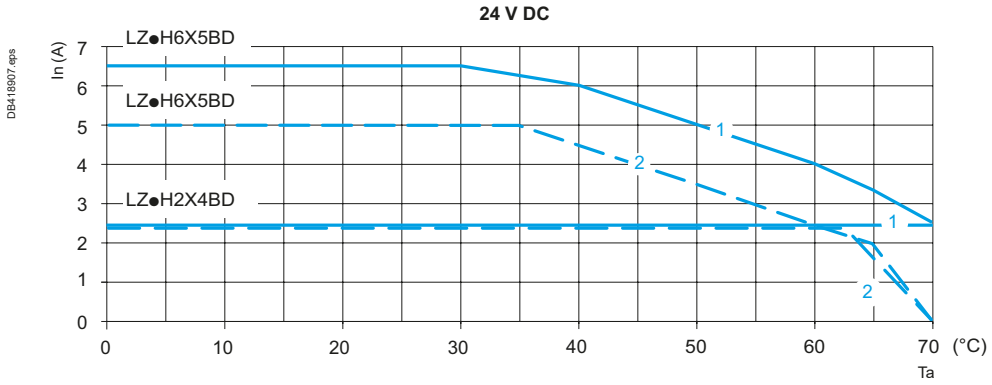

Derating according:
- motor starter control power supply
- ambient temperature (Ta)
- distance between devices **1**: 20 mm, with spacing
  2: without spacing.

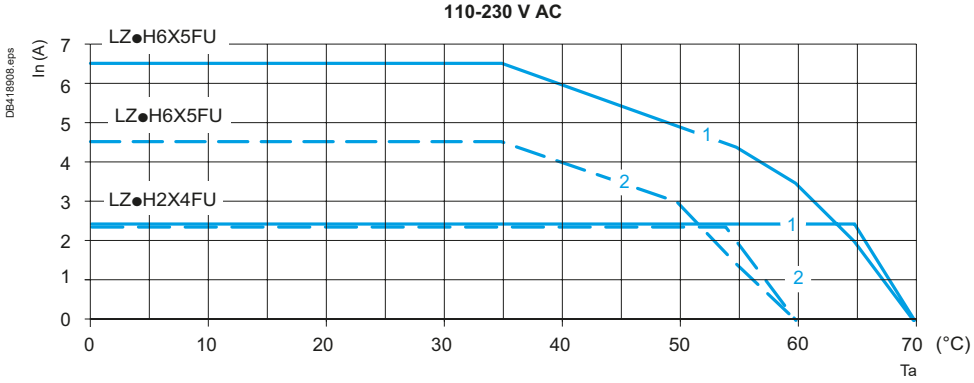

Minimum duty cycle t/T (%) versus cycle duration T (s)

Due to the effect of the peak current on the H monitoring circuit during the starting time, a stop/start sequence should not occur before a certain amount of time. The diagrams below show the minimum duty cycle according the total period for 2 typical starting time values.

With a starting time = 100 ms

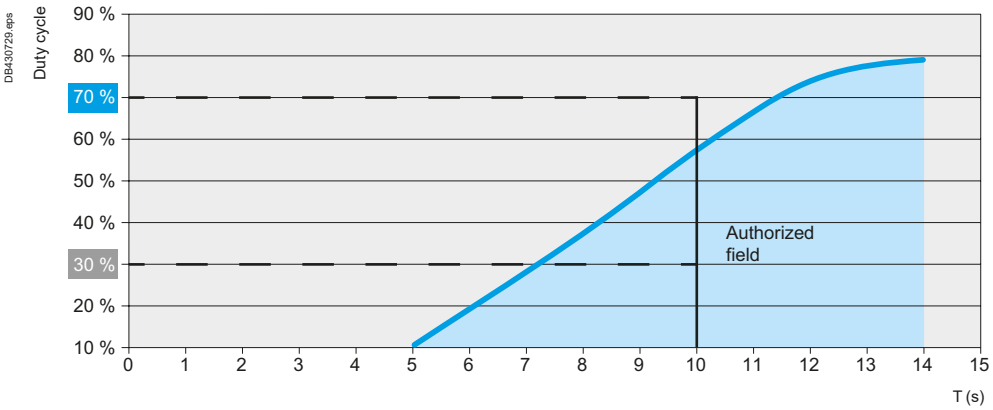

Example for starting time of 100 ms with period T = 10 s.

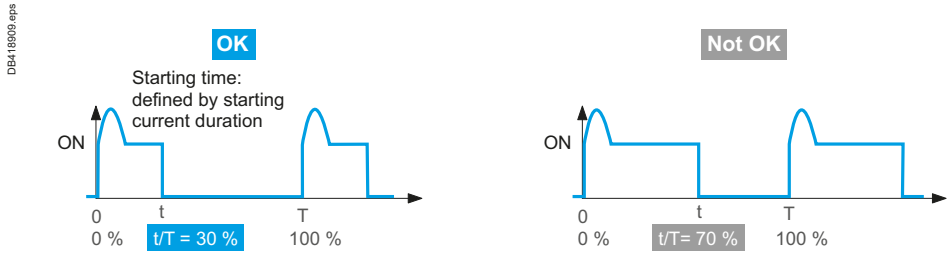

With a starting time = 150 ms

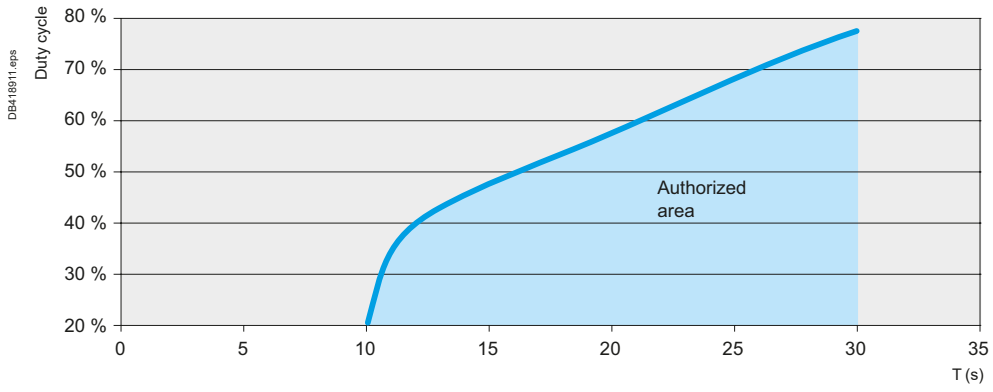

References:
pages A3/6 and A3/7
Description:
pages A3/12 and A3/13
Characteristics:
pages A3/14 and A3/15
Dimensions, schemes:
page A3/18

Dimensions mm

LZ●H●●●●●

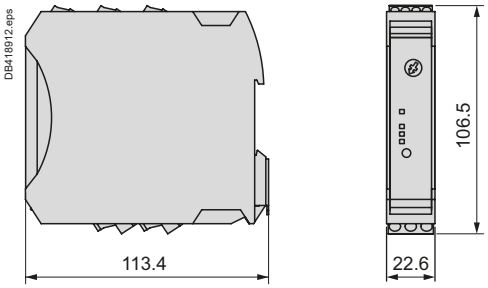

LZ●H●●●3●●

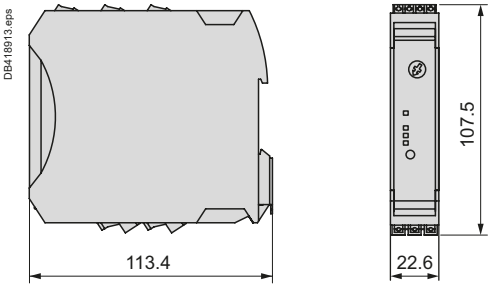

Wiring diagrams

Motor control by standard starter

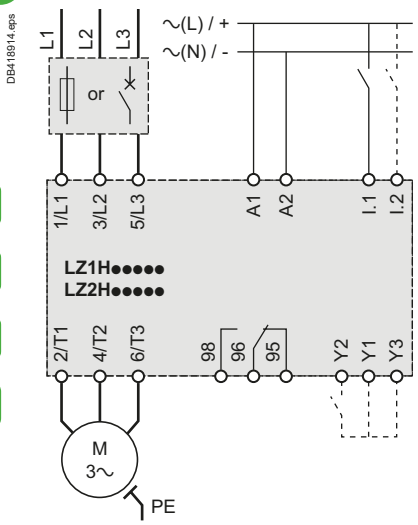

Motor control by safety starter

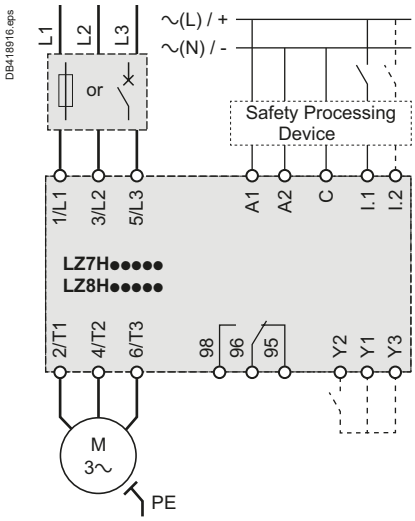

Power terminals

T1, T2, T3	*Motor connection*
L1, L2, L3	*Power inputs*

Control terminals

A1, A2	*Auxiliary power unit*
I.1	*Control input, direction 1*
I.2	*Control input, direction 2 (LZ2H and LZ8H only)*
C	*Control inputs common point (LZ7H and LZ8H only)*
Y1	*Reset mode, common point*
Y2	*Reset mode, remote, manual*
Y3	*Reset mode, automatic*
98, 96, 95	*Trip or error signaling contact*

TeSys Control
Ultra motor starters

Introduction A4/2

TeSys Ultra - Power bases, control modules, connectors

Type of product	Range		Page
Standard power base, basic control functionalities Direct and reversing	Up to 18.5 kW		A4/10

TeSys Ultra - Communication components

Parallel type cabling system Principle and components	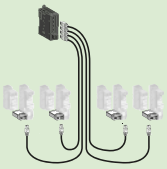	A4/16
Bus type cabling systems Principle, panorama and components	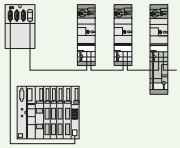	A4/21
TeSys LUFP communication gateway		A4/30

TeSys Ultra - Accessories

Short circuit current limiter		A4/31
Handles and accessories for rotary control	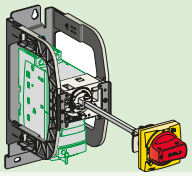	A4/32
Handles and accessories for integration into a MCC drawer	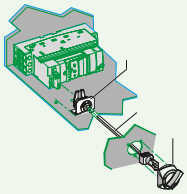	A4/33
TeSys Ultra with Altistart U01 Soft starters and Variable speed controllers		A4/34

Technical Data for Designers A4/43

From traditional solution to ...

Motor circuit breaker: GV2L



Magnetic protection
> short-circuit protection

Contactor: D



Control
> Start /Stop

Status monitoring
> signaling
> alarm monitoring

Protection relay: LRD



Thermal protection
> overload

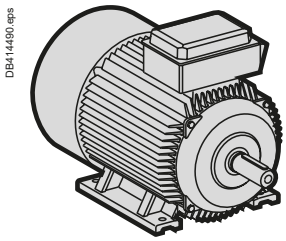

...Ultra motor starter



Ultra motor starter

> All basic or advanced protection and control functions in one block

and more...

> Overload indication and alarm

> Status report, remote control via communication bus

Ultra motor starters can be used in **80 %** of motor protection and control applications.

PB123877_R.tif



DB414490.eps

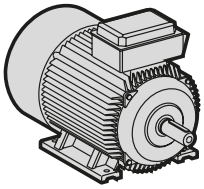

1 All in one

- Optimising space in enclosures.
- Total coordination (No contact welding on short circuit).
- Reduces installation times.

2 Simplicity of choice

- Controlled power.
- Protection functions ensured.
- Signaling functions, communication with PLC ensured.

3 Universal mounting

- On DIN rail or grid.

4 Conventional projet design

- Conventional control scheme with start , stop push buttons.

5 Electrically simple

Basic scheme of a Ultra starter-controller

- Protection and power control functions acting on a single set of contact (QF1).
- The control unit (CU) monitors the voltage and current. In case of fault, it releases the coil, causing tripping.
- The coil is controlled by manual orders from an operator. Automatic control from a PLC is achieved with other diagrams.

DB414491R.eps

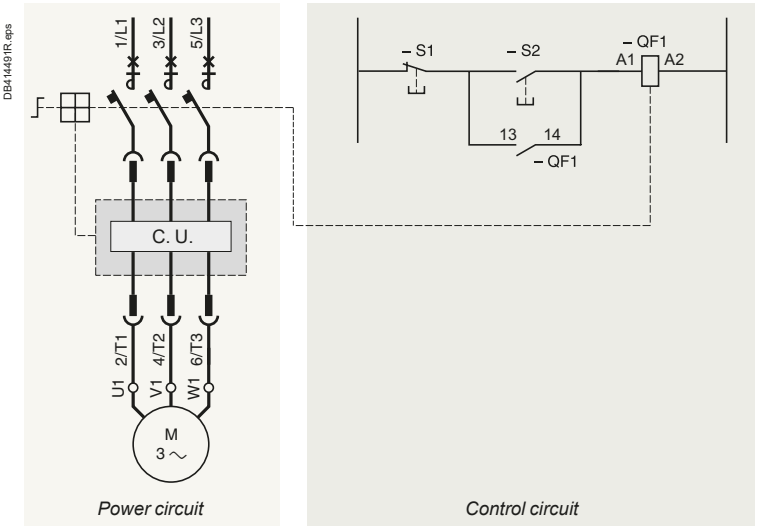



Motor up to
- 7.5 kW / 1-phase 230 V / 50-60 Hz.
- 18.5 kW / 3-phase 400-440 V / 50-60 Hz.
- 18.5 kW / 3-phase 500 V / 50-60 Hz.
- 22 kW / 3-phase 690 V / 50-60 Hz.
- Non-reversing or reversing.

Common characteristics

Short-circuit protection

■ Isc:
□ 50 kA at ≤ 400 V
□ 10 kA at 500 V
□ 4 kA at 690 V.
■ Up to 690 V AC.

Overload protection

■ From 0.15 to 38 A, 6 setting ranges (tripping 14.2 x I setting).
■ Test button.
■ Adjustment lock.
■ Coil choice: 24 V, 48…72 V, 110...240 V DC/AC.

3 power contacts

■ For non-reversing (reversing with reverser block).
■ Imax, for 12 A power base (direct - reversing):
□ 12 A at up to 500 V / 50 Hz
□ 9 A > 500 V, up to 690 V.
■ Imax, for 38 A power base (direct - reversing):
□ 38 A at up to 500 V / 50 Hz
□ 21 A > 500 V, up to 690 V.

1 NO contact
1 NC contact

■ 5 A / max. 690 V AC or 250 V CC.

Other monitoring contacts

■ 5 A / max. 690 V AC or 250 V DC.

Communication modules

■ Modbus,
■ Ethernet,
■ CANopen,
■ DeviceNet,
■ Advantys stb,
■ Profibus DP,
■ AS-interface.

Dimensions

■ Base:

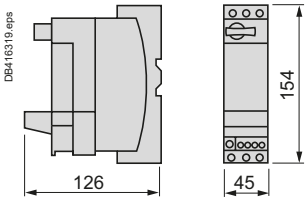

■ Base + reverser block:

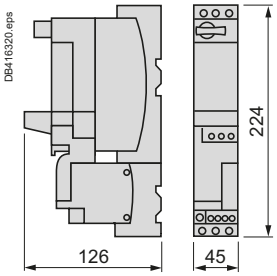

DB414493.eps

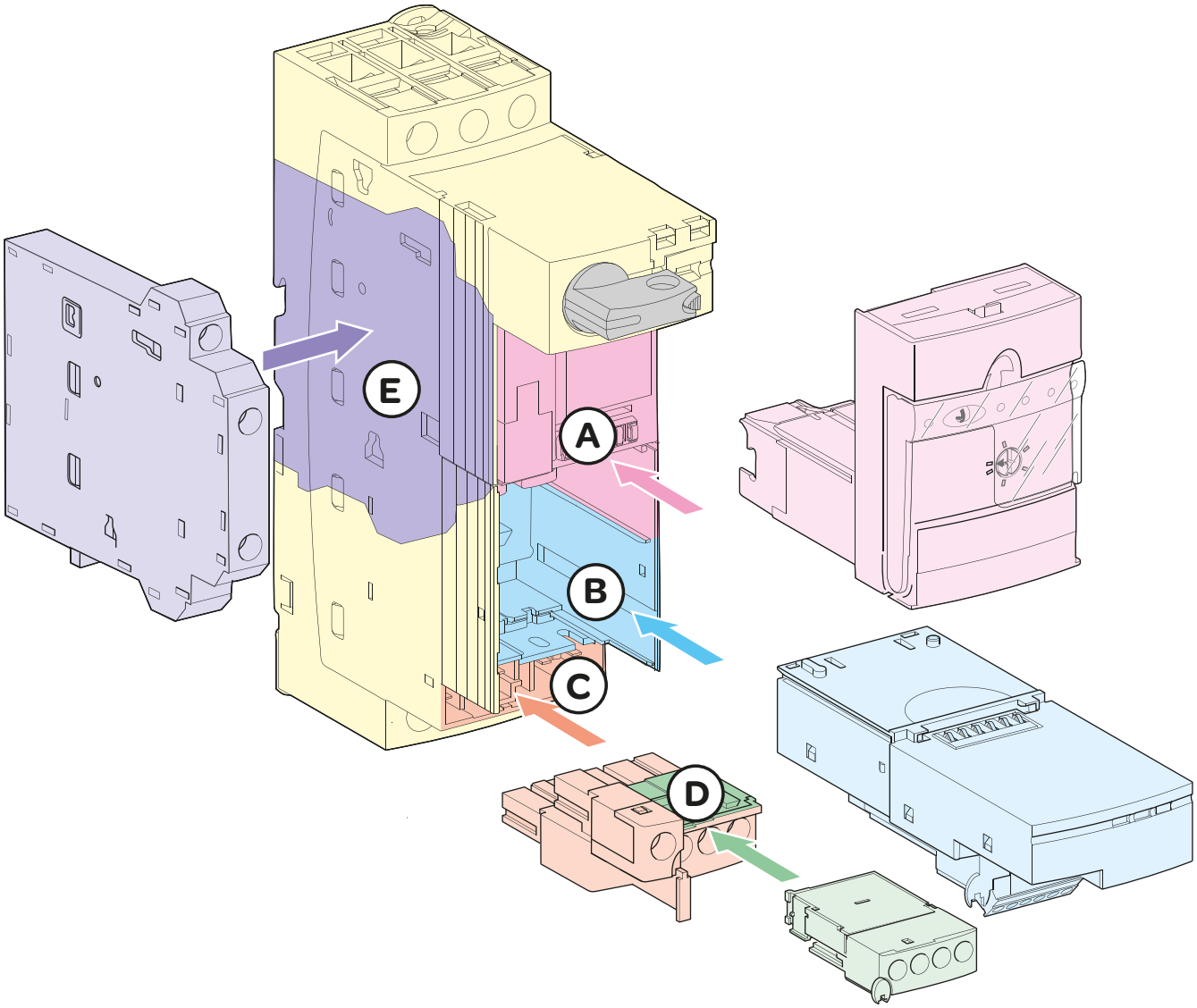

The modularity principle

- Power base
- (A) Cavity for control unit
- (B) Cavity for auxiliary module
- (C) Cavity for control terminal block
- (D) Cavity for additional contact block or shutter
- (E) Space for additional block fastening

Power Base

This is the basic constituent of the motor starter, it is composed of the power contacts, the control coil, the opening / closing mechanism of the protection device and the control pad.

Additional lateral block

Composed of the protection device signaling contacts.

Control unit

Composed of the power base management processor and setting knobs.

Auxiliary module

Depending on its type, it integrates load status contacts or a communication processor or an alarm processor.

Control terminal block

It is composed of two terminals "coil control", 1 NO auxiliary contact, 1 NC auxiliary contact. It can be eventually connected to an auxiliary communication module via a dedicated cable.

Additional block

It includes protection device additional signaling contacts. By default, this is a simple shutter.

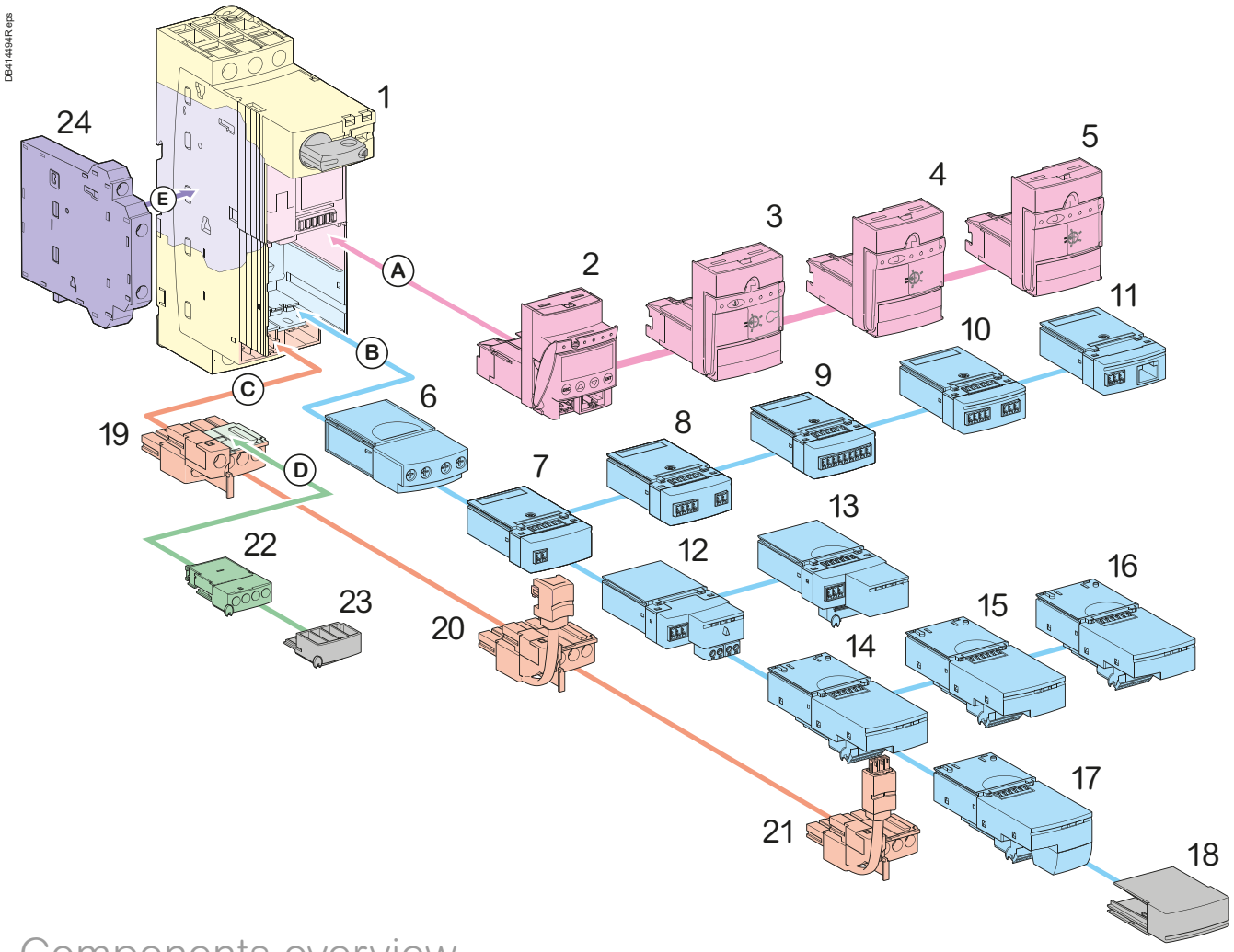

Components overview

Power base

1- LUB
Non reversing power base - 1 rotation direction

Control units

2- LUCM
Multifunctional control unit

3- LUCB/LUCC/LUCD
Advanced control units

4- LUCA
Standard control unit

5- LUCL
Magnetic protection control unit

Auxiliary module

6- LUFN
Auxiliary contacts module

Load monitoring auxiliary modules

7- LUFW10
Overload alarm module

8- LUFDH11
Overload alarm module with manual reset

9- LUFDA01/LUFAD10
Overload alarm module with automatic reset/remote reset

10- LUFV2
Motor load indication module

Communication auxiliary modules

11- LUFC00
Telefast parallel liaison module, with RJ45 connector

12- ASILUFC5/ASILUFC51
AS-Interface c. m.

13- LULC033
Modbus c. m

14- LULC07 Profibus DP c. m

15- LULC08 CANopen c. m.

16- LULC09 DeviceNET c. m.

17- LULC15 Advantys STB c. m.

Shutters

18- LU9C1
Shutter for module cavity

23- Shutter for contacts additional block cavity

Control terminal blocks

19- LU9BN11
Terminal block for imbedded auxiliary contacts

20- LU9BN11C
Coil terminal block with its connecting cable

21- LU9BN11L
Coil terminal block with its connecting cable

Additional contacts blocks

22- LUA1
Additional contacts

24- LUA8
side-mounting additional contacts

DB414495R.eps

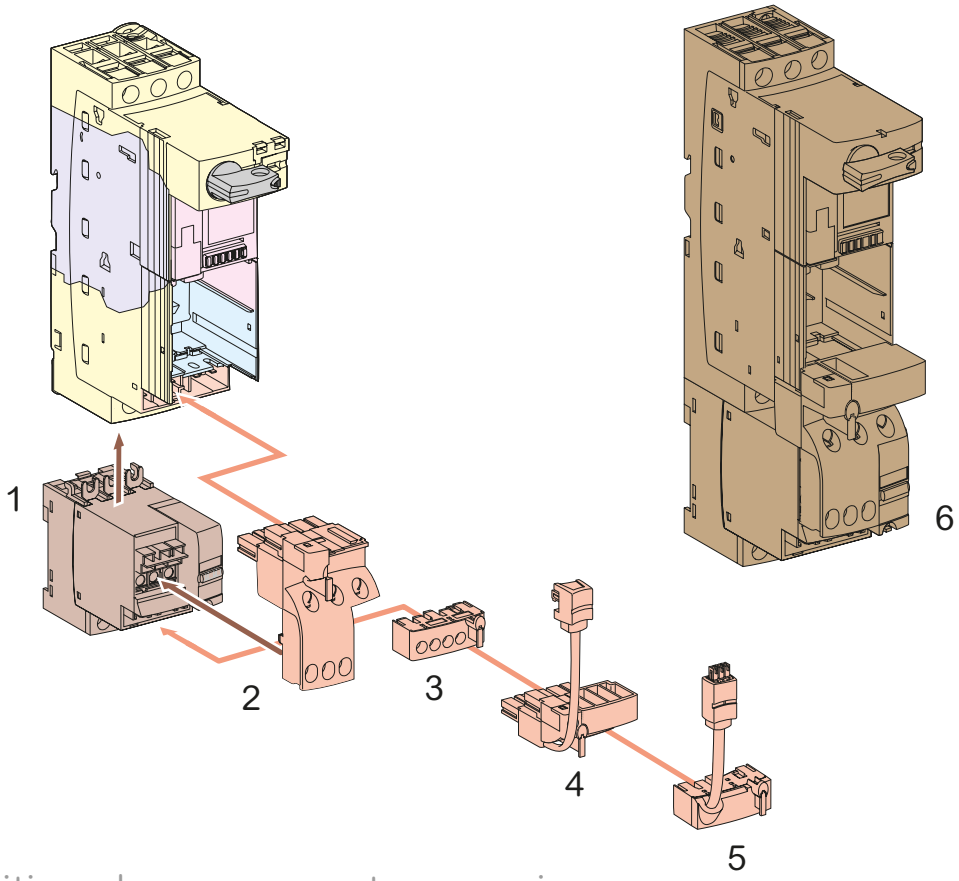

Additional components overview

Reverser block

1- LU2MB0●●
vertical-mounting reverser block

Evoluting reversing power base

6- Pre-assembled reversing power base **LU2B12**

Control terminal blocks

2- LU9MR1C
Base/block assembling connector, with terminal block for imbedded auxiliary contacts

3- LU9M1
Coil terminal block for wired control

4- LU9MRC
Coil terminal block with its connecting cable for communicating control (only compatible with a selection of com. modules).

5-LU9MRL
Coil terminal block with its connecting cable for communicating control (only compatible with a selection of com. modules).

DB414497.eps

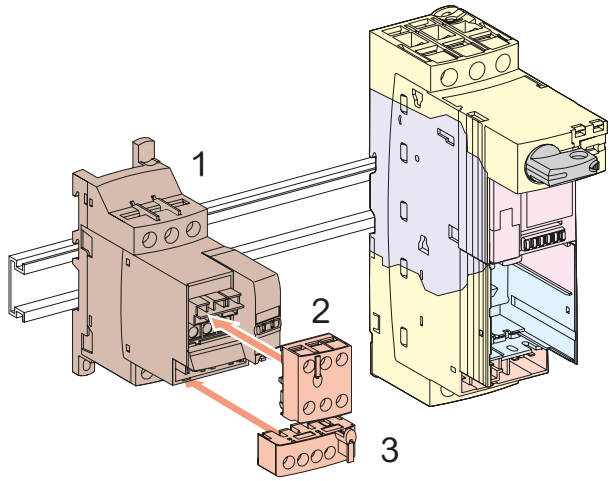

Additional components overview

Reverser block

1- LU6MB0●●
Side-mounting reverser block

Terminal blocks for electrical remote control

2- LU9MR1
Terminal block for 2 direction control (pulse or maintained control)

3- LU9M1
Terminal block for power base coil interlocking. With direction of rotation monitoring contacts

Product references



1 direction:
LUB12, LUB32, LUB38



1 direction:
LUB120, LUB320, LUB380
** LU9BN11: Terminal block for embedded auxiliary contacts to be ordered separately.*



2 direction:
LU2B12●●, LU2B32●●, LU2B38●●



LU9MR1C



LU2MB0●●



LU9M1



LU6MB0●●



LU9MR1

Power bases

Ultra starters are composed with separate elements: power component + control units + auxiliary components.
The power base includes the electro mechanical parts. It is selected according to:
- Motor power to be handled
- Number of direction of rotation to be controlled: 1 or 2
- Type of control to be acheived: Basic or Advanced.

Basic control
1- direction rotation control
2 - direction rotation control
Overload + Short circuit protection
Main power monitoring
Status signaling contacts

Advanced control
Functions of basic control
+ Digital display of electrical values
+ Overload alarms
+ Network/bus communication

Function	Max motor standard power (400 V)	Lip_in (400 V)	References	
	kW	A	Basic ctrl	Advanced ctrl
	5.5	12	**LUB12**	**LUB120**
1-direction rotation	15	32	**LUB32**	**LUB320**
	18.5	38	**LUB38**	**LUB380**
	5.5	12	**LU2B12●●** (1)	**LUB120 + reverser block ass.**
2-direction rotation	15	32	**LU2B32●●** (1)	**LUB320 + reverser block ass.**
	18.5	38	**LU2B38●●** (1) (2)	**LUB380 + reverser block ass.**

(1) Replace the 2 dots by the coil voltage code below – AC is 50-60 Hz.
(2) With BL or FU code only.

Coil voltage (V)	24 ⎓	24 ∿	48...72 ⎓ or ∿	110...220 ⎓ and 110...240 ∿
Code	**BL**	**B**	**ES**	**FU**

Please check the availability of your variant in the index page A4/42. The SEARCH function of your viewer can be used.

Reverser blocks - assemblies

A reverser block assembly has to be added to the power base (LUB120 to 380) to build an 'Advanced control' with '2-direction of rotation' Ultra starter.
Reverser blocks with 2 mounting possibilities:
- vertical mounting– mounted aspect: refer to LU2B12, 32, 38
- side mounting, on a Din rail.

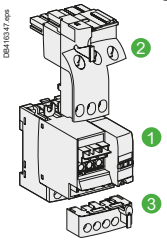

Vertical mounting

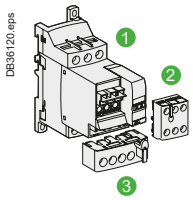

Side mounting

Blocks	References	
	Vertical mounting	Side mounting
1 Reverser block	**LU2MB0●●** (1)	**LU6MB0●●** (1)
2 Aux. contacts connector	**LU9MR1C**	**LU9MR1**
3 Coil supply connector	**LU9M1**	**LU9M1**

(1) Replace the 2 dots by the coil voltage code below – AC is 50-60 Hz.

Coil voltage (V)	24 ⎓	24 ∿	48...72 ⎓ or ∿	110...220 ⎓ and 110...240 ∿
Code	**BL**	**B**	**ES**	**FU**

Main technical caracteristics

Power bases
1-direction power base overall dimensions (HxWxD) : 154 x 45 x 126 mm
2-direction power base (assembly with vertical mounting reverser block) overall dimensions (HxWxD): 224 x 45 x 126 mm
Power bases are delivered with protective blanking plates.

3 power poles, for connections of a 1-phase or 3-phase motor
Screw clamp power terminals, for up to 2 x 6 mm² conductors
Screw clamp control terminals, for up to 2 x 1.5 mm² conductors

LUB12,32,38 imbedded terminals:
- coil supply,
- NO (13-14) contact (for control push button)
- NC (21-22) contact (for control push button).

Additional signaling contact modules provide more possibilities.

Reversing assemblies
LU2MB0, LU6MB0:
3 power poles, for connections of a 1-phase or 3-phase motor, screw clamp power terminals, for up to 2 x 6 mm² conductors
LU9 connectors: screw clamp control terminals, for up to 2 x 1.5 mm² conductors

LU2MB0●●, LU6MB0●● provide terminals for power circuits.
LU9MR1C, LU9MR1 provide signalling contact terminals (82-81-84) that indicate the direction of rotation.
LU9M1 provides coil supply terminals (A2-A1-A3) and 2 NO contact terminals (A1-B1, A3-B3) for direction control.

Characteristics: pages A4/44 to A4/46, A4/54
Curves: pages A4/56 to A4/61
Dimensions: pages A4/62 and A4/63
Schemes: pages A4/64 to A4/76

Product references

PB123879.eps



LUCA, LUCB, LUCC, LUCD, LUCL series.
Ex.: LUCA05BL

DB414499.eps

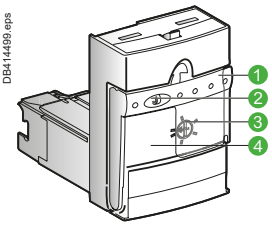

LUCA●●●●

1. Extraction and locking handle.
2. Sealing of locking handle.
3. Ir adjustment dial.
4. Locking of settings by sealing the transparent cover.

Ultra starters are composed with separate elements: power component + control units + auxiliary modules.The control unit includes electronic components and the current adjustment dial. The control uinit is selected according to:
- Motor power to be handled.

Type of protection: thermal+magnetic or magnetic only.

Control units for power bases with basic control

LUCA - thermal + magnetic (standard) units

- Protection against overload: 14.2 x Ir (setting current).
- Protection against short circuit: 13 x Ir max (max setting current).
- Protection against missing or unbalanced phases.
- Protection against insulation fault (protection of equipment only).
- Class 10 tripping.
- Frequency 50...60 Hz.

LUCL - magnetic units

- Protection against short circuits.
- To be used when a standard power base is connected to a motor drive or a soft starter, as they provide the overload protection.

*Note: both **LUCA** and **LUCL** units can be used in the advanced power bases **LUB120** and **LUB320**.*

Maximum standardized power ratings of 3 phases motors 50/60 Hz				Lip_in mounting on the power base - Rating	DB414499.eps Control unit product reference (1)	
400/440 V	500 V	690 V	Setting range			
kW	kW	kW	A	A	Thermal + magnetic	Magnetic
					LUCA	LUCL
0.09	-	-	0.15...0,6	12 and 32	**LUCAX6●●**	**LUCLX6●●**
0.25	-	-	0.35...1,4	12 and 32	**LUCA1X●●**	**LUCL1X●●**
1.5	2.2	3	1.25...5	12 and 32	**LUCA05●●**	**LUCL05●●**
5.5	5.5	9	3...12	12 and 32	**LUCA12●●**	**LUCL12●●**
7.5	9	15	4.5...18	32	**LUCA18●●**	**LUCL18●●**
15	15	18.5	8...32	32	**LUCA32●●**	**LUCL32●●**
18.5	18.5	22	9.5...38	38	**LUCA38●●** (2)	**LUCL38●●** (2)

(1) Replace the 2 dots by the coil voltage code below – AC is 50-60 Hz.
*(2) With **BL** or **FU** code only.*

Coil voltage (V)	24⎓	24∿	48...72 ⎓ or ∿	110...220 ⎓ and 110...240∿
Code	**BL**	**B**	**ES**	**FU**

Please check the availability of your variant in the index page A4/42. The SEARCH function of your viewer can be used.

Characteristics: pages A4/47 to A4/49, A4/55
Curves: pages A4/56 to A4/58
Schemes: page A4/62

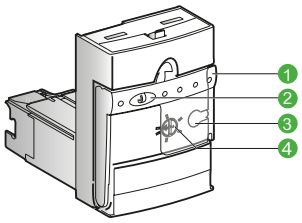

LUCB●●●●, LUCC●●●●, LUCD●●●● control units

1. Extraction and locking.
2. Handle sealing of locking.
3. Handle
4. Ir adjustment dial test push button.

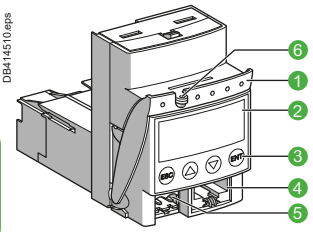

LUCM●●BL control unit

1. Extraction and locking handle.
2. Built-in LCD display (2 lines, 12 characters).
3. 4 button keyboard.
4. RJ45 connector for RS485 Modbus communication
5. Connector for external 24 V DC power supply.
6. Sealing of locking handle.

Control units for power bases with advanced control

LUCB, LUCC, LUCD control and diagnostic units

Motor protection, fault diagnostic.
Protection against
- overload: 14.2 x Ir (setting current).

Simulation of an overload by depressing the test push button.
- short circuit: 13 x Ir max (max setting current).
- missing or unbalanced phases.

Overload alarm management:
- locally: with one of the LUF family module
- Remotely: with LULC031, LULC033, LULC07, LULC08, LULC09 or LULC15 (thermal alarm only) communication module.

Reset:
- manual
- automatic, with a communication module.

LUCM multifunctional control unit

Motor protection, operational values display and diagnostic.
To be associated with 24 V DC coil only.
LUCM●●BL: tripping class 5 to 30, single phase, three phase
Same functions as LUCB●●●● with complementary functions:
- in working mode: display of electrical values, setting parameters and events
- in configuration mode: display of protection and alarm settings.

These functions are available for local display on a display panel, and for remote display via a RJ45 Modbus connector.
LUCM is not compatible with LUB38.

Note: a 24 V DC power supply is required during the configuration process.



LUCM12BL

Maximum standardized power ratings of 3 phases motors 50/60 Hz				Setting range	Lip_in mounting on the power base - Rating	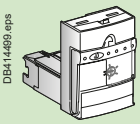 Protection type: - overload - short-circuit - Main power fault - alarm			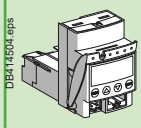 Multifunctional
400/440 V		500 V	600 V						
kW		kW	kW	A	A	Class 10	Class 10	Class 20	Class 5...30
1P	3P	3P	3P			3P	1P	3P	1 - 3P
-	0.09	-	-	0.15...0.6	12 and 32	LUCBX6●●	LUCCX6●●	LUCDX6●●	LUCMX6BL
0.09	0.25	-	-	0.35...1.4	12 and 32	LUCB1X●●	LUCC1X●●	LUCD1X●●	LUCM1XBL
0.55	1.5	2.2	3	1.25...5	12 and 32	LUCB05●●	LUCC05●●	LUCD05●●	LUCM05BL
2.2	5.5	5.5	9	3...12	12 and 32	LUCB12●●	LUCC12●●	LUCD12●●	LUCM12BL
4	7.5	9	15	4.5...18	32	LUCB18●●	LUCC18●●	LUCD18●●	LUCM18BL
7.5	15	15	18.5	8...32	32	LUCB32●●	LUCC32●●	LUCD32●●	LUCM32BL
18.5	18.5	22	9.5...38	38		LUCB38●● (1)		LUCD38●● (1)	

Cial. ref. of the control unit: replace dots by the coil code.

Please check the availability of your variant in the index page A4/42. The SEARCH function of your viewer can be used.

Coil voltage (V)	24 ⎓	24 ∿	48...72 ⎓ and 48 ∿	110...220 ⎓ and 110...240 ∿
Coil code	BL	B	ES	FU

(1) With BL or FU code only.

Product references

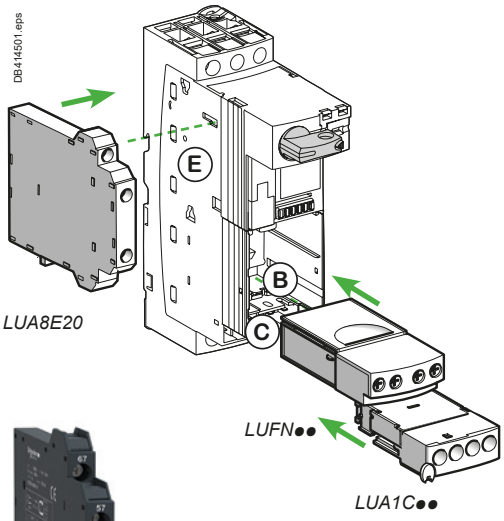

LUA8E20

LUFN●●

LUA1C●●



LUA8E20



LUFN02



LUA1C20

Signaling module and blocks

They provide dry contacts of Normally Open (NO) or Normally Closed (NC) type for signaling purpose. The monitored status can be either the motor running status or the protection device status, depending on the commercial reference of the module or block.

Common electrical characteristics

Standard operating voltage: 24…250 V AC/DC.
Maximum current: 5 A.

Compatibility - Positioning

The signaling module and blocks can be use in any power base
LUA8E20 is clipped on the E side of the power base
LUFN11, LUFN02, LUFN02 inserted into B cavity
LUA1C20, LUA1C11 inserted into C cavity
***Note**: B and C cavities may be already used for reverser-starter, communication.*

Signaling module and blocks	Output	References
Module *Motor running status: ON / OFF*	1 NO + 1 NC	**LUFN11**
	2 NC	**LUFN02**
	2 NO	**LUFN20**
Block *Protection status: OPEN / CLOSED (OF) STANDBY / TRIPPED (SD)*	2 NO	**LUA1C20**
	1 NO + 1 NC	**LUA1C11**
Side block *Protection status: OPEN / CLOSED (OF)*	2 NO	**LUA8E20**



LUFV2



LUFW10



LUFDH11



LUFDA01



LUFDA10

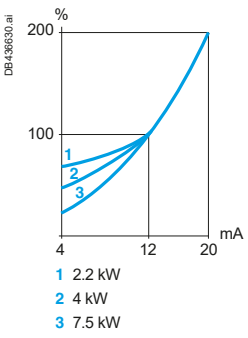

LUFV2 typical response curve

Function modules

They provide analog output or dry contacts of Normally Open (NO) or Normally Closed (NC) type for measurement or signaling purpose.

Common electrical characteristics

Standard operating voltage: 24…250 V AC/DC.
Maximum current: 5 A.

Compatibility - Positioning

The function modules can only be used in a LUB120, LUB320 or LUB380 power base, in cavity B.

Function modules	Output type	References
Electrical value: average current in each phase. The signal is the image of the pourcentage of In. External 24 V DC power supply needed	Analog: 4-20 mA	**LUFV2**
Contact closes if average current in the phases = 105 % of In	1 NO	**LUFW10**
Contacts change state if tripping is caused by overload	1 NO + 1 NC	**LUFDH11**
Contact opens if overload tripping is reset with control pad or remotly	1 NC	**LUFDA01**
Contact closes if overload tripping is reset with control pad or remotly	1 NO	**LUFDA10**

Characteristics:
pages A4/50 to A4/54

Schemes:
pages A4/64 to A4/66



LUFC00

Auxiliary parallel wiring module (1)

Auxiliary parallel wiring module for Modicon Telefast system

Inputs

They collect the FWD, REV controls from an automation process.
An RJ45 parallel port is used, for connection to the 24 V DC outputs of a PLC.

Outputs

They give the position of the control pad and the state of the poles,
They provide 24 V DC controls to the LUB120, 320 or 380 power base coil via the LU9BN11C adapter (A2, A1) or to the LU2B12, 32, 38 power base coil with a LU9MRC adapter (A2, A1, A3).

Compatibility - Positioning

The paralle wiring module can only be used in any Ultra power base,
with LUC●●● control unit with coil voltage
Compatible with:
- Modicon TM3 (map I/O controllers for RJ45 M221, M241, M25)
- Modicon STB modules (I/O for automation island)
- Modicon Telefast (interfaces RJ45/HE10).

The parallel wiring module is inserted in cavity B.

Note: *the parallel wiring module must be connected to a* ***LU9G02*** *or* ***LU9G03*** *Telefast distribution*
Note: *more details on parallel wiring page A4/16.*

Designation	References
Ultra power base parallel wiring module	**LUFC00**



LULC033



ASILUFC51



LULC07



LULC15



LU9BN11C



LU9BN11L

Communication modules

Communication modules

These modules send the control pad position and pole state to a communicating system (PLC, monitoring system,…)
They collects the Forward, Reverse motor controls from an automation process.
The status and controls are coded according to an industrial communication protocol, depending on the communication module.
Bus cable connection, external power supply by crew clamp terminals.
Connector for coil control (to A1-A3-A2) via a prewired connection (LU9BN● for 1-direction control, LU9MR● for 2-direction control)

Compatibility - Positioning

The communication modules can only be used in a LUB120, LUB320 or LUB380 power base, in cavity B.

Designation	References
Ultra Modbus communication module	**LULC033**
Ultra AS-Interface communication module	**ASILUFC51**
Ultra Profibus DP communication module	**LULC07**
Ultra CANopen communication module	**LULC08**
Ultra DeviceNet communication module	**LULC09**
Ultra Advantys STB communication module	**LULC15**

Note: *Ethernet communication can be acheived with* ***LULC033*** *+ ConneXium Port (ref.* ***TCSEQM113M13M****)*
Note: *more details on bus-type communication page A4/21.*



LU9MRC



LU9MRL

Prewired connectors

They provide the necessary electrical link between a parallel or communication module and the coil supply connector, on the power base or reverser block. Thus, ON-OFF (1 direction) or FORWARD-REVERSE (2 direction) controls can be acheived.

Prewired connection			References	Compatibility with modules
1 direction	Short cable	Side connection	**LU9BN11C**	**LUFC00, LULC033, ASILUFC51**
		Bottom connection	**LU9BN11L**	**LULC07, 08, 09, 15**
2 direction	Long cable	Side connection	**LU9MRC**	**LUFC00, LULC033, ASILUFC51**
		Bottom connection	**LU9MRL**	**LULC07, 08, 09, 15**

Introduction:
pages A4/16 to A4/19, A4/21 to A4/23
Characteristics:
pages A4/24 to A4/29, A4/51 to A4/55
Schemes:
pages A4/66 to A4/69

Introduction

PB105089.eps



Point-to-point wiring

DB416375.eps

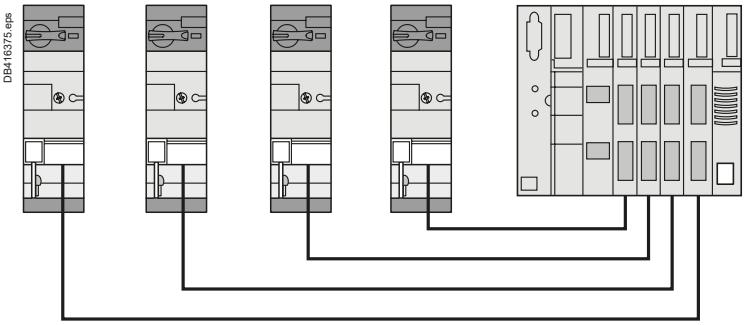

■ The control inputs and signaling outputs of the starter are grouped in a single socket, usually RJ45.
They are individually connected to PLC outputs and inputs.
■ The wires run in parallel in a multicore cable equipped with a multipin connectors, RJ45 in the case of Telefast type system.
■ 3 parallel wiring systems are available:
□ Modicon TM3, based on a RJ45 I/O module for M221, M241, M25 PLC
□ Modicon STB, based on I/O modules for automation island
□ Modicon Telefast: RJ45 / HE10 interfaces.
■ Simple way of proximity wiring. Quick cabling.
It is suitable for machine control panels when a large number of Ultra starter-controller are installed.

informations

■ The control and signaling terminals of the starters are connected to the output and input terminals of a PLC. No specific connectors or cables are required.
■ Conventional wiring mode, without optimization of the cabling time.
May be suitable when a very small number of starters is used, with a very small number of links.

Parallel cabling systems

DB416374.eps

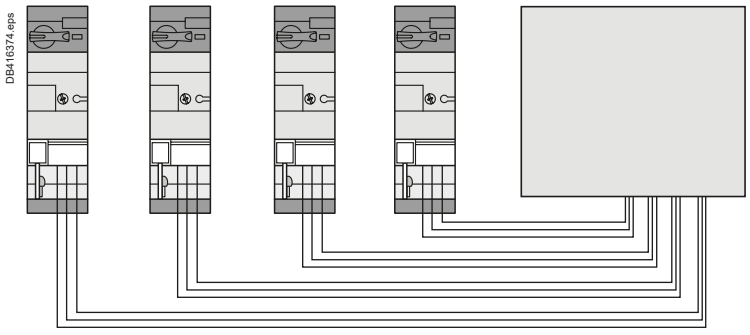

Life Is On Schneider Electric

Introduction

Integration in the Modicon TM3 wiring system

The Ultra starter-controller are directly connected to a I/O module equipped with RJ45 connectors.

1. Modicon M221, M241, M251 PLC's
2. TM3XTY I/O module for 4 starters
3. LU9R●● cables with RJ45 connectors,
4. LUFC00 module for TeSys Control parallel connection (1 or 2 direction of rotation).

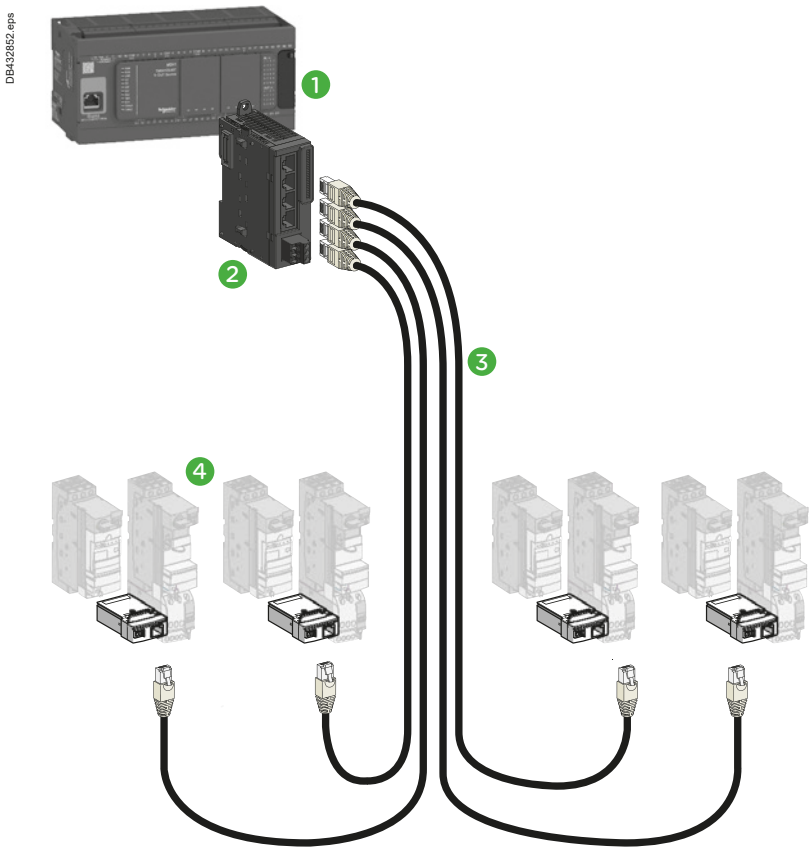

Integration in the Modicon Advantys STB system

Advantys STB is a solution for remote I/O modules.

These communicate with the Modicon PLCs range thanks to a serial liaison, using the Advantys STB protocol.

In this example an Advantys I/O module is used to facilitate wiring.

Each of its four terminals receives a preassembled RJ45 cable connected to a Ultra starter-controller.

1. Ultra LUB120, 320 or 380 power base (equipped with 24 V DC LUC●●●●BL control modules)
2. TeSys Control module for parallel RJ45 wiring: LUFC00 + LU9BN11C (one direction) or LU9MRC (2 directions for LU2B12, 32 or 38 power base)
3. RJ45 cables (2 connectors):
   ⩽ 3 m: LU9R●●
   > 3 m: 490 NTW000●● (5, 12, 40 or 80 m)
4. PLC: Modicon range
5. I/O Modicon Advantys module: STB EPI 2145K

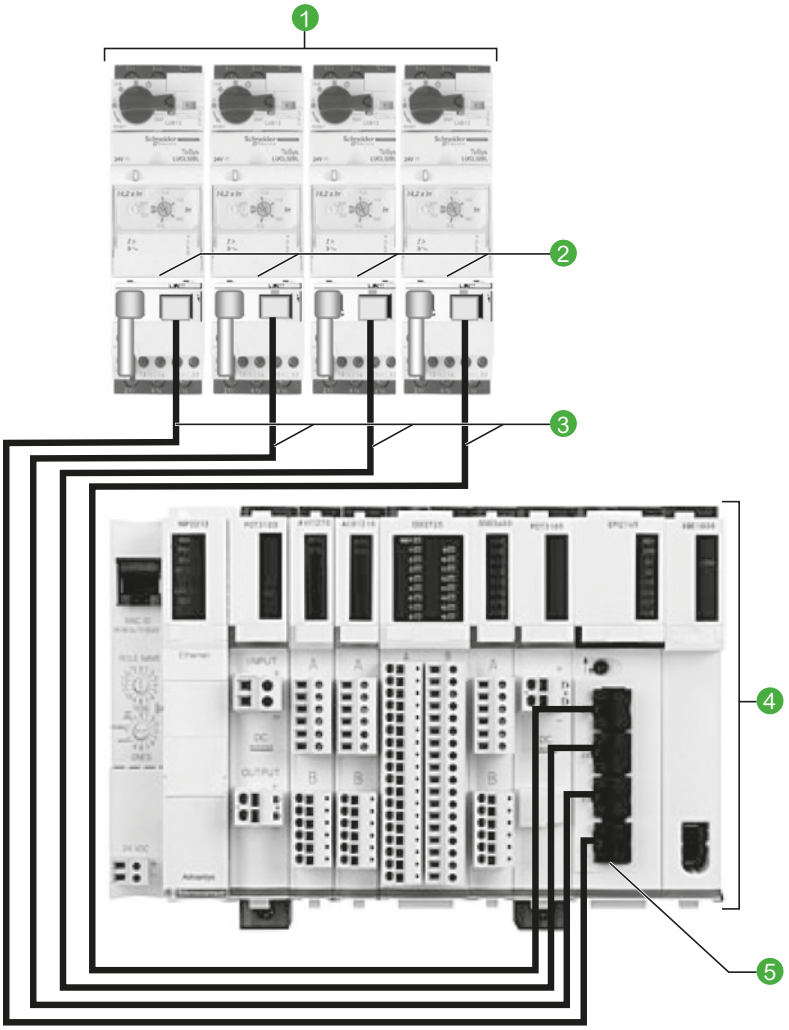

Life Is On Schneider Electric

Integration in the Modicon Telefast system

The wiring hubb **LU9G0●** facilitates the connection to Modicon Premium PLCs.
It adapts RJ45 connectors to HE10 available on the Telefast I/O modules.
Connection: up to 8 Ultra per hubb.

1. Ultra LUB120, 320 or 380 power base (equipped with 24 V DC LUC●●●●BL control units)
2. TeSys Control module for parallel wiring RJ45: LUFC00 + LU9BN11C (one direction) or LU9MRC (2 directions for LU2B12, 32 or 38 power base)
3. RJ45 cables (2 connectors):
⩽ 3 m: LU9R●●
> 3 m: 490 NTW000●● (5, 12, 40 or 80 m)
4. Telefast RJ45 / HE10 splitter box: LU9G02 or LU9G03 (different Ultra connection capacities)
5. HE10 cables (2 connectors): TSXCDP●●●
6. PLC: Modicon Premium range
7. I/O module: TSX DMY 28FK

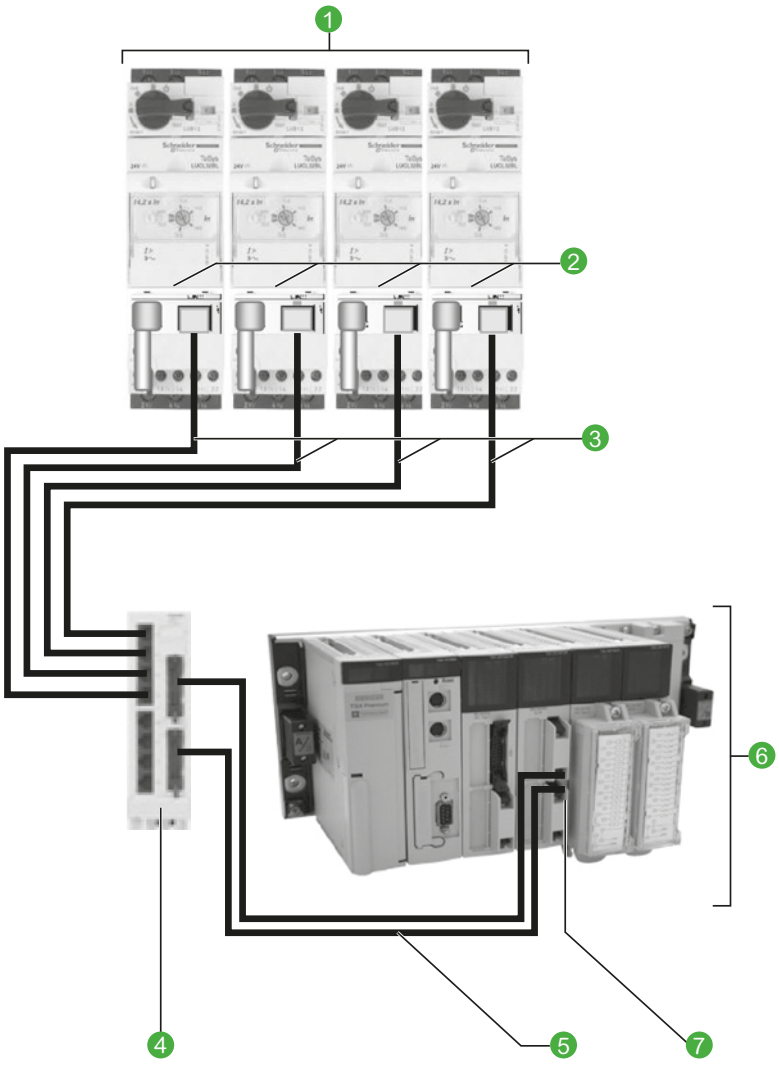

Product references

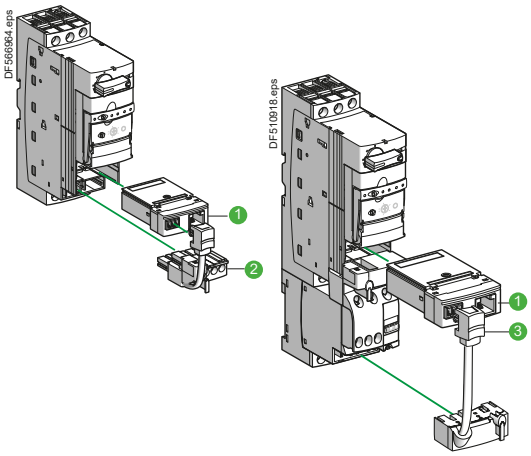

Components for connection of a starter - 1 direction of rotation	
Designation	**Reference**
1 Parallel connection module, RJ45 output 2 coil control inputs, 3 signal outputs	**LUFC00**
2 Pre wired connector, one direction of rotation, for LUB120, 320 or 380 power base coil connection and one contact for emergency stop	**LU9BN11C**

Components for connection of a starter - 2 directions of rotation	
Designation	**Reference**
1 Parallel connection module, RJ45 output	**LUFC00**
3 Pre wired connector, 2 directions of rotation, for LU2B12, 32 or 38 power base coil connection and one contact for emergency stop	**LU9MRC**



LU9G02



LU9G03

Telefast RJ45/ HE10 splitter box	
Designation	**Reference**
Splitter box Connection to U: 4 RJ45 connectors: for 1 to 4 U, 1 or 2 directions 4 RJ45 connectors: for 1 to 4 U, 1 direction Connection to PLC: 1 x HE10 connector - 20 chanels, for pole status, alarms 1 x HE10 connector - 20 chanels, for control. 24 V DC auxiliary power supply required	**LU9G02**
Splitter box Connection to U: 8 RJ45 connectors: for 1 to 8 U, 1 or 2 directions Connection to PLC: 1 x HE10 connector - 20 chanels, for pole status, alarms 1 x HE10 connector - 20 chanels, for control. 24 V DC auxiliary power supply required.	**LU9G03**

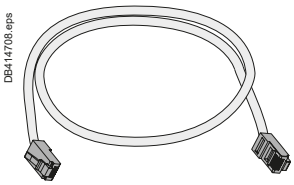

RJ45 cables.

RJ45 connection cables, with 2 RJ45 connectors	
0.3 m	**LU9R03**
1 m	**LU9R10**
3 m	**LU9R30**

HE10 connection cables, with 2 HE10/20 way connectors	
Section: AWG 22 / 0.324 mm²	
0.5 m	**TSXCDP053**
1 m	**TSXCDP103**
2 m	**TSXCDP203**
3 m	**TSXCDP303**
5 m	**TSXCDP503**
Section: AWG 28 / 0.080 mm² (flat cable)	
1 m	**ABFH20H100**
2 m	**ABFH20H200**
3 m	**ABFH20H300**

Cable with stripped wires (PLC side) 1 x HE10/20 ways connector (Splitter box side)	
Section: AWG 22 / 0.324 mm²	
3 m	**TSXCDP301**
5 m	**TSXCDP501**

Characteristics:
page A4/53

Schemes:
pages A4/69 and A4/70

Life Is On Schneider Electric

PB105092.eps



Application functionality, topology

1 Geographically expanded process

Many motors are scattered on the site, the process control requires individual control to ensure safety and proper operation.
Ultra is a suitable communicating actuator. The integration of a bus communication module in the starter-controller saves space in the control board and simplifies wiring, compared to solutions based on conventional components (circuit breaker + contactor).

2 Application: automatic motor control / monitoring

Thanks to a communication bus, starter-controllers are part of an automation system controlled by a PLC and (or) various communicating controllers.
These equipment can then share the status and alarm information related to each motor control and perform specific treatments.

3 Bus- type connection

This type of connection allows different topologies (star, ring ...) and supports various protocols dialogue. It is therefore recommended for geographically expanded process, in order to to simplify wiring and ensure multiple-controller management.

- The bus wiring interconnects Ultra starters controllers and components of the installation via a single the cable.
- Commands and status are coded according to the selected protocol and transmitted on the communication bus.
- This wiring is simple, usually a shielded (or not) pair of wires, suitable for monitored automation, regardless of the number of Ultra and their locations.

DB416376.eps

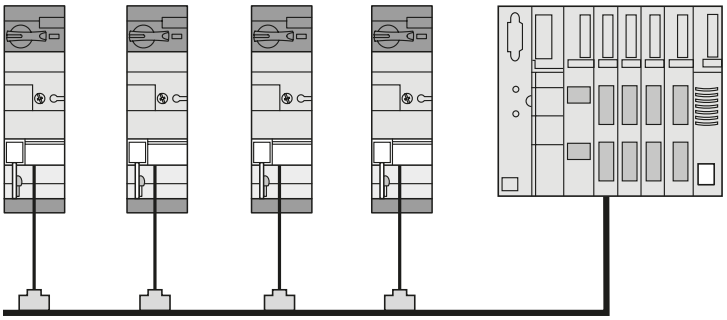

Available Ultra status and controls via a communication module

Control unit	LUCA	LUCB LUCC LUCD	LUCM
Starter status (ready, running, fault)	■	■	■
Start and Stop commands	■	■	■
Thermal overload alarm		■	■
Remote reset via the bus		■	■
Indication of motor load		■	■
Fault signalling and differentiation		■	■
Remote programming and monitoring of all functions			■
“Log” function			■
“Monitoring” function			■
Alarms (overcurrent, ...)			■

Network	Architecture	Component references
Modbus	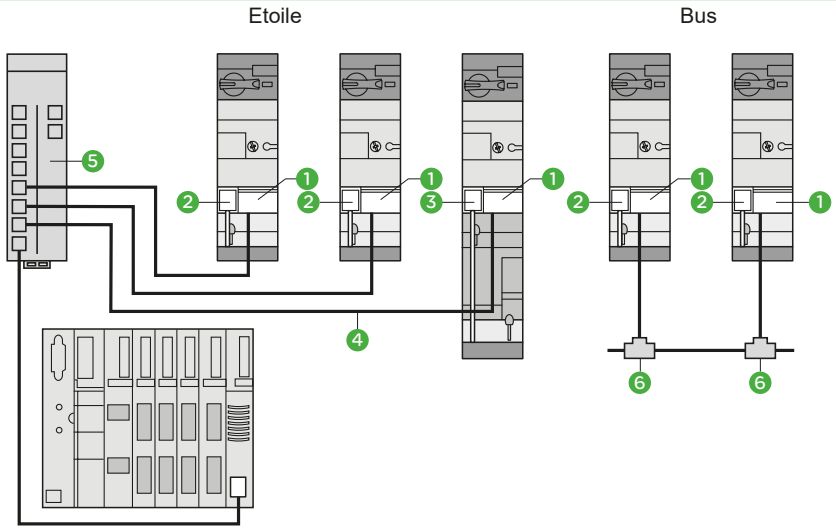	1 LULC033 2 LU9BN11C 3 LU9MRC 4 VW3A8306R●●● 5 LU9GC3 6 VW3A8306TF
Details page **A4/26**		
Advantys STB	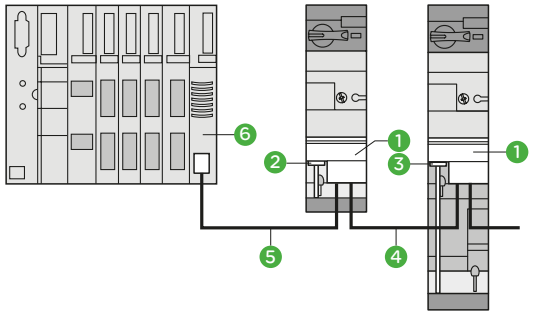	1 LULC15 2 LU9BN11L 3 LU9MRL 4 LU9RDD●●● 5 LU9RCD 6 STBXBE1100
Starter-controllers communicate using ADVANTYS STB protocol to fit into a remote I/O architecture. Details page **A4/27**		

Network	Architecture	Component references
Profibus-DP (Decentralized Peripherals)		
is used for connecting actuators and sensors to a central controller for applications in industrial production. The standard bus provides a number of diagnostic means Details page **A4/28**	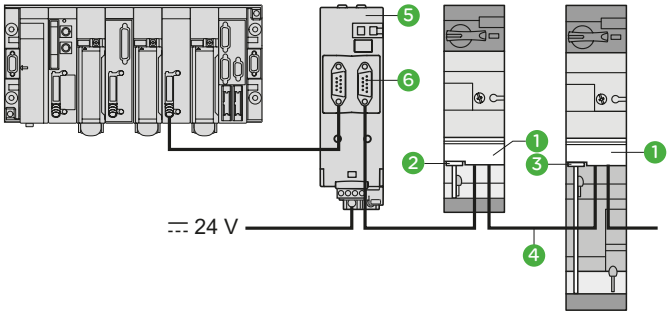	1 LULC07 2 LU9BN11L 3 LU9MRL 4 LU9RPB010 LU9RPB100 LU9RPB400 5 LU9AD7 6 LU9GC7
DeviceNet		
Details page **A4/29**	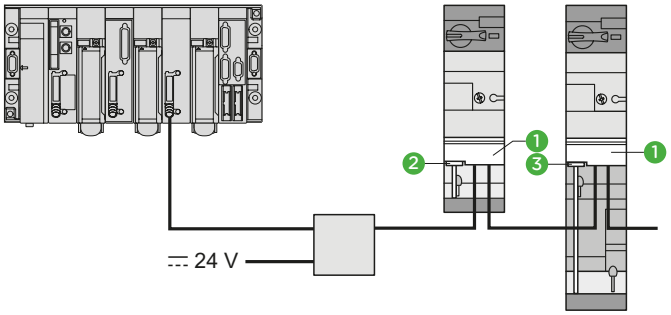	1 LULC09 2 LU9BN11L 3 LU9MRL

Product references

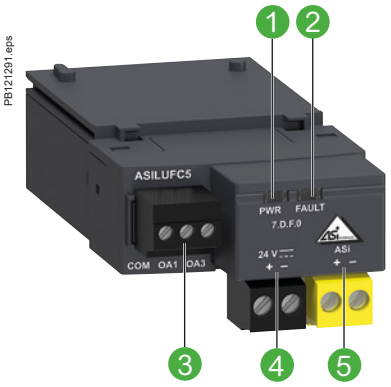

1. Green LED: AS-Interface voltage present
2. Red LED: AS-Interface or module fault
3. Outputs for starter commands
4. Black connector for connection to ⎓ 24 V auxiliary power supply
5. Yellow connector for connection to the AS-Interface system

The ASILUFC5 communication module, combined with the power base and control unit is used to control Ultra starters-controllers via DeviceNet bus.
The LULC09 communication module is slave type.

Module Specifications

I/O terminal block

- Powered by external 24 V DC (power supply not included):
  - 2 x configurable inputs for binary sensors
  - 1 x 24 V DC output - 0.5 A local auxiliary command.

Connectors

- For Ultra 24 V DC coil (common, direction 1, direction 2).
- For AS-Interface bus.

Signaling

- Module Status - Error - 24 V, by LED.

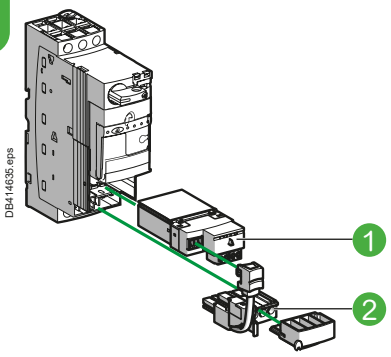

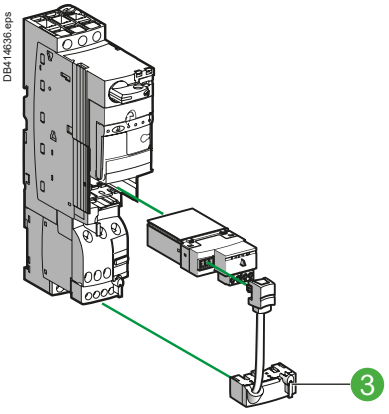

Tesys Control components

Description	Mark	Max number of slaves	References
AS-Interface communication module	1	31	**ASILUFC5**
		62	**ASILUFC51**
Pre-wired connector: coil - LUB powerbase	2	-	**LU9BN11C**
Pre-wired connector: coil - LU2B powerbase	3	-	**LU9MRC**

Characteristics:
pages A4/51, A4/53, A4/55

Schemes:
pages A4/66, A4/72, A4/74

Product references

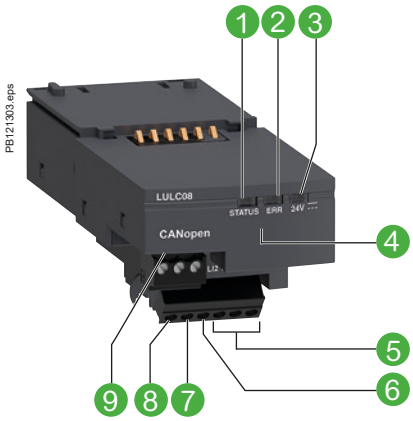

1 LED indicating module status
2 Fault signalling LED
3 LED indicating ⎓ 24 V supply ON for outputs OA1, OA3 and LO1
4 SUB-D connector for bus link
5 ⎓ 24 V supply connection
6 Discrete input
7 Discrete input
8 Discrete output
9 Outputs for starter commands

The LULC08 communication module, combined with the power base and control unit is used to control Ultra starters-controllers via CANopen bus.
The LULC08 communication module is slave type.

Module Specifications

I/O terminal block

- Powered by external 24 V DC (power supply not included):
  - 2 x configurable inputs for binary sensors
  - 1 x 24 V DC output - 0.5 A local auxiliary command.

Connectors

- For Ultra 24 V DC coil (common, direction 1, direction 2).
- For CANopen bus.

Signaling

- Module Status - Error - 24 V, by LED.

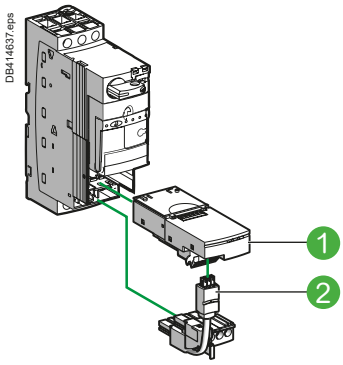

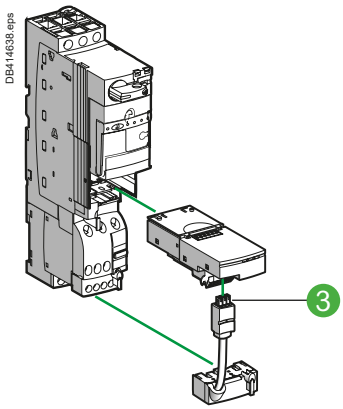

Tesys Control components		
Description	**Item**	**References**
CANopen communication module	1	**LULC08**
Pre-wired connector: coil - LUB powerbase	2	**LU9BN11L**
Pre-wired connector: coil - LU2B powerbase	3	**LU9MRL**

Compatibility of CANopen communication module with control units	
LUCA ●●BL / B ●●BL / C ●●BL / D ●●BL	All versions marketed after **2T0481** (1)
LUCM●●BL	All versions ≥ V3.2
LUCMT1BL	All versions ≥ V3.2

(1) This "date code" is made up as follows:
***2T** or **2C**: factory code.*
***04**, **05**, **06** and so on: year of manufacture.*
***08**: week.*
***1**: 1st day of the week.*

How to get information on the design of a CANopen architecture and the choice of network accessories

Consult the library of downloadable documents on schneider-electric.com by searching on the name of the communication protocol.

Characteristics:
pages A4/52, A4/53, A4/55

Schemes:
page A4/68

Product references

LULC033

PB121552.eps

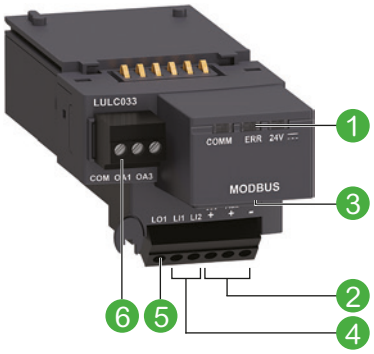

1 Module status signalling LED
2 24 V supply connection
3 RJ45 connector for RS485 Modbus link
4 2 discrete inputs
5 1 discrete output
6 Outputs for starter commands

LULC033 communication module, combined with the power base and control unit is used to control Ultra starters-controllers via Modbus.

Module Specifications

I/O terminal block

■ Powered by external 24 V DC (power supply not included):
□ 2 x configurable inputs for binary sensors (on LULC033 only)
□ 1 x 24 V DC output - 0.5 A local auxiliary command.

Connectors

For Ultra 24 V DC coil (common, direction 1, direction 2).
■ RJ45, For Modbus line.

Signaling

■ Module Status - Error - 24 V, by LED.

DB414639.eps

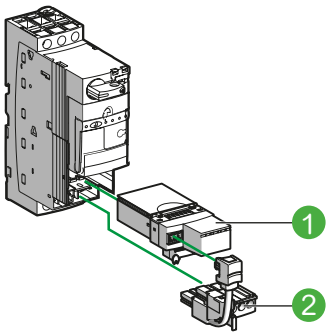

DB414640.eps

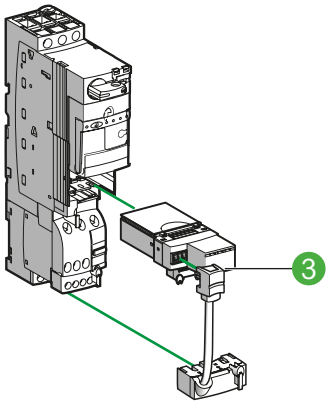

DB414709.eps

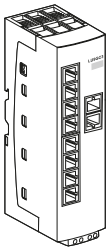

Tesys Control components			
Description	**Item**	**Bin. input**	**References**
Modbus communication module	1	2	**LULC033**
Pre-wired connector: coil - LUB powerbase	2	-	**LU9BN11C**
Pre-wired connector: coil - LU2B powerbase	3	-	**LU9MRC**

Modbus hub		
Description	**Length (m)**	**References**
Modbus communication distributor	-	**LU9GC3**
Cables fitted with 2 x RJ45 connectors	0.3	**VW3A8306R03**
	1	**VW3A8306R10**
	3	**VW3A8306R30**
Tees derivations	0.3	**VW3A8306TF03**
	1	**VW3A8306TF10**
Description		**References**
RS 485 line terminator		**VW3A8306R**

Compatibility of Modbus communication modules			
Communication modules (software version)		**LULC033 from V2.1**	**LULC033 from V2.2**
Power base	LUB●● / LU2B●2	■	■
	LUTM●●BL	■	■
Control unit	LUCA●●BL		■
	LUCB●●BL LUCC●●BL LUCD●●BL		■
	LUCM●●BL		■ (1)
	LUCBT●●BL LUCDT●●BL	■	
	LUCMT●●BL	■	

*(1) Except **LUCM ●●BL** V1.04 and V1.06.*

How to get information on the design of a Modbus architecture and the choice of network accessories

Consult the library of downloadable documents on schneider-electric.com by searching on the name of the communication protocol.

Characteristics:
pages A4/51, A4/53, A4/55

Schemes:
pages A4/67 and A4/75

Product references

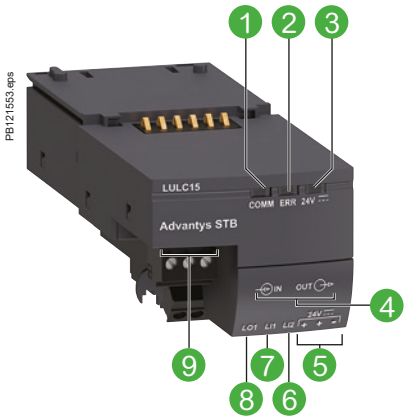

1 Two-colour LED indicating module status
2 Fault signalling LED
3 LED indicating that ⎓ 24 V supply is ON
4 Bus connectors
5 ⎓ 24 V supply connection
6 Discrete input
7 Discrete input
8 Discrete output
9 Outputs for starter commands

Communication module LULC15 allows direct connection of Ultra starter-controllers and controllers on an Advantys STB island, between two segments or at the end of a segment. The starter-controller will then be able to make use of the services provided by Advantys STB: self-addressing, autobaud, fallback positions.

Module Specifications

I/O terminal block

- Powered by external 24 V DC (power supply not included):
  - 2 x configurable inputs for binary sensors (on LULC033 only)
  - 1 x 24 V DC output - 0.5 A local auxiliary command.

Connectors

- For Ultra 24 V DC coil (common, direction 1, direction 2).
- For Advantys STB bus.

Signaling

- Com - Error - 24 V, by LED.

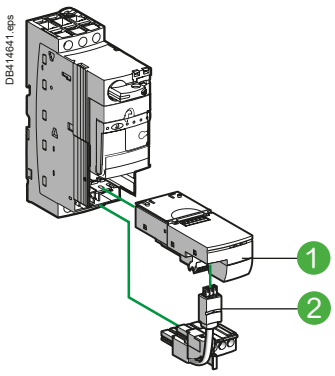

LUB + LULC15 + LU9BN11L

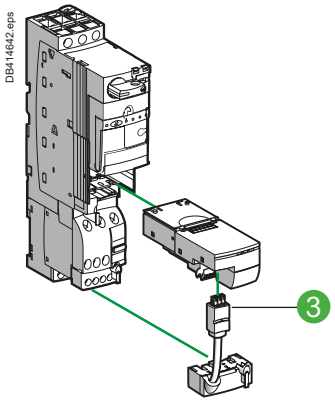

LU2B + LULC15 + LU9MRL

Tesys Control components

Description	Item	References
Advantys STB communication module	1	**LULC15**
Pre-wired connector: coil - LUB powerbase	2	**LU9BN11L**
Pre-wired connector: coil - LU2B powerbase	3	**LU9MRL**

Cables

Description	Length (m)	References
Cables fitted with connectors, one straight and one elbowed	0.3	**LU9RCD03**
	1	**LU9RCD10**
	5	**LU9RCD50**
Cables fitted with two straight connectors	0.3	**LU9RDD03**
	3	**LU9RDD30**

Compatibility of Advantys STB communication module with control units

LUCA●●BL / B●●BL / C●●BL / D●●BL	All versions marketed after **2T0481** (1)
LUCM●●BL	All versions ≥ V3.2
LUCMT1BL	All versions ≥ V3.2

(1) This "date code" is made up as follows:
2T *or* ***2C****: factory code.*
04*,* ***05****,* ***06*** *and so on: year of manufacture.*
08*: week.*
1*: 1st day of the week.*

How to get information on the design of a Advantys STB architecture and the choice of network accessories

Consulter la librairie des documents téléchargeables sur le site schneider-electric.com en faisant une recherche sur le nom du protocole de transmission.

Characteristics:
pages A4/52, A4/53, A4/55

Schemes:
page A4/69

Product references

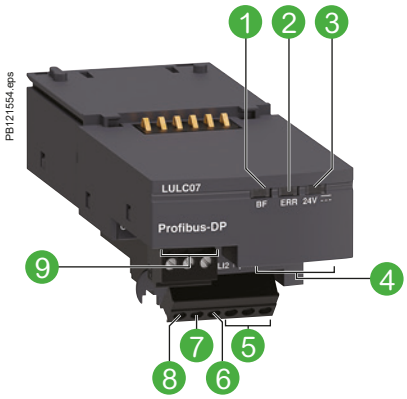

1 Two-colour LED indicating module status
2 Fault signalling LED
3 LED indicating ⎓ 24 V supply ON for outputs OA1, OA3 and LO1
4 SUB-D connector for bus link
5 ⎓ 24 V supply connection
6 Discrete input
7 Discrete input
8 Discrete output
9 Outputs for starter-controller commands (non-reversing and reversing)

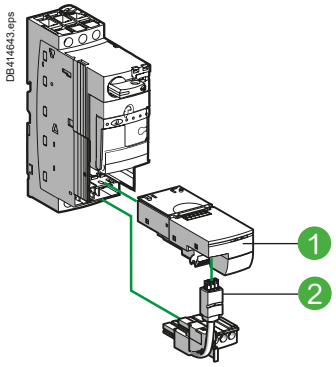

LUB + LUC●●●BL + LULC07 + LU9BN11L

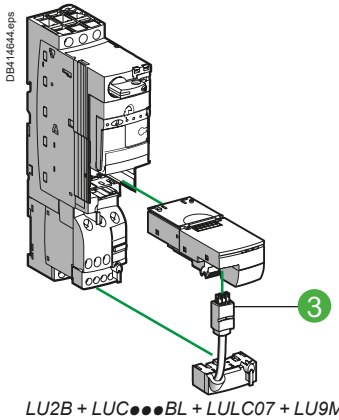

LU2B + LUC●●●BL + LULC07 + LU9MRL

When used in conjunction with the power base and control unit, communication module LULC07 allows Ultra starter-controllers to be controlled via Profibus DP (Deported Periphery) bus.
Communication module LULC07 is of the slave type.

Module Specifications

I/O terminal block

- Powered by external 24 V DC (power supply not included):
  - 2 x configurable inputs for binary sensors
  - 1 x 24 V DC output - 0.5 A local auxiliary command.

Connectors

- For Ultra 24 V DC coil (common, direction 1, direction 2).
- For Profibus DP bus.

Signaling

- Com - Error - 24 V, by LED.

Tesys Control components

Description	Item	References
Profibus DP communication module	1	**LULC07**
Pre-wired connector: coil - LUB powerbase	2	**LU9BN11L**
Pre-wired connector: coil - LU2B powerbase	3	**LU9MRL**

Components for connection to the bus and to the installation

The 24 V DC -Aux supply to Profibus DP modules LULC07 must pass through power supply module LU9GC7.
LULC07 modules must be connected to the LU9GC7 splitter box in order to be powered.
The number of Ultra starter-controllers that can be powered by an LU9GC7 module is limited by the maximum current (1.5 A) which it can deliver.
The ⎓ 24 V supply for the inputs/outputs must be provided separately..

Description	Length (m)	References
Profibus DP power supply module	-	**LU9GC7**
Profibus DP connector	-	**LU9AD7**
Profibus DP cables 2-wire	100	**TSXPBSCA100**
	400	**TSXPBSCA400**
Profibus DP cables 4-wire	10	**LU9RPB010**
	100	**LU9RPB100**
	400	**LU9RPB400**

How to get information on the design of a Profibus DP architecture and the choice of network accessories

Consult the library of downloadable documents on schneider-electric.com by searching on the name of the communication protocol.

Characteristics: pages A4/52 and A4/55
Schemes: page A4/68, A4/69

Product references

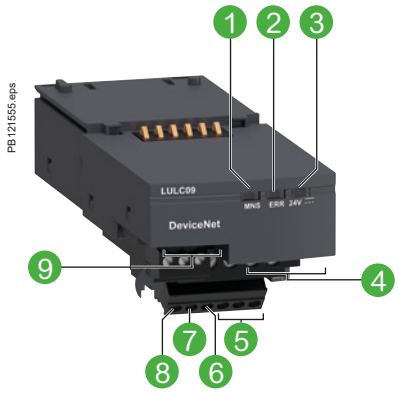

1. LED indicating module status
2. Fault signalling LED
3. LED indicating ⎓ 24 V supply ON for outputs OA1, OA3 and LO1 and 24 V bus
4. DeviceNet connector for bus link
5. ⎓ 24 V supply connection
6. Discrete input
7. Discrete input
8. Discrete output
9. Outputs for starter-controller commands (non-reversing and reversing)

When used in conjunction with the power base and control unit, communication module LULC09 allows Ultra starter-controllers to be controlled via DeviceNet bus. Communication module LULC09 is of the slave type.

Module Specifications

I/O terminal block

- Powered by external 24 V DC (power supply not included):
  - 2 x configurable inputs for binary sensors
  - 1 x 24 V DC output - 0.5 A local auxiliary command.

Connectors

- For Ultra 24 V DC coil (common, direction 1, direction 2).
- For DeviceNet bus.

Signaling

- Com - Error - 24 V , by LED.

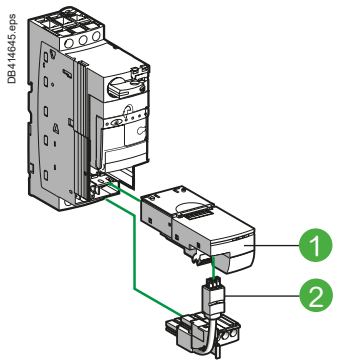

LUB + LUC●●●BL + LULC07 + LU9BN11L

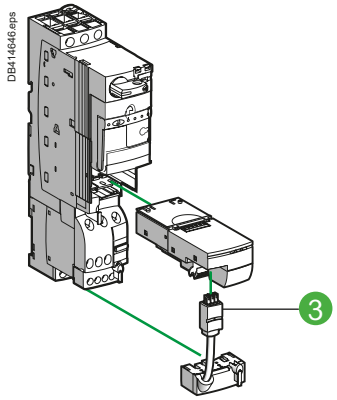

LU2B + LUC●●●BL + LULC07 + LU9MRL

Tesys Control components		
Description	**Item**	**References**
DeviceNet communication module	1	**LULC09**
Pre-wired connector: coil - LUB powerbase	2	**LU9BN11L**
Pre-wired connector: coil - LU2B powerbase	3	**LU9MRL**

How to get information on the design of a DeviceNet architecture and the choice of network accessories

Consult the library of downloadable documents on schneider-electric.com by searching on the name of the communication protocol.

Characteristics:
pages A4/52, A4/53, A4/55

Schemes:
page A4/68

PB121557.eps



LUFP9

Introduction

LUFP communication gateways allow connection between the Modbus serial link and Fipio, Profibus DP or DeviceNet field buses.

After configuration, these gateways manage information which can be accessed by the Modbus serial link and make this information available for read/write functions (command, monitoring, configuration and adjustment) on the field buses.

An LUFP communication gateway consists of a box which can be clipped onto a 35 mm omega rail, allowing connection of up to 8 Slaves connected on the Modbus serial link.

Example of architecture

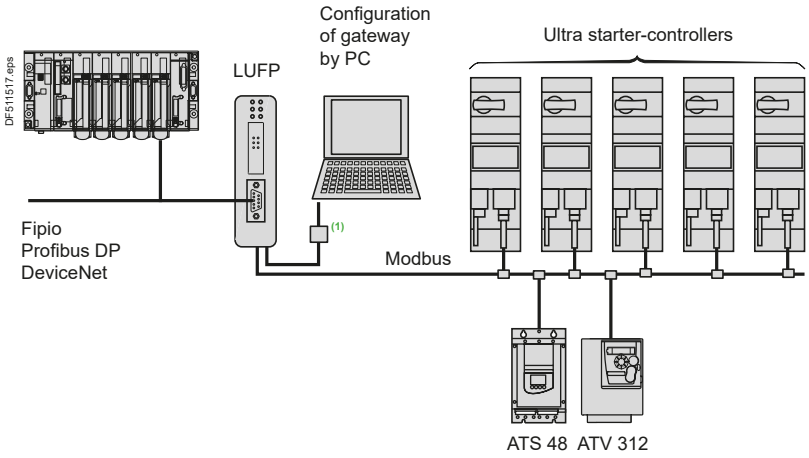

DF526109-17-M.eps

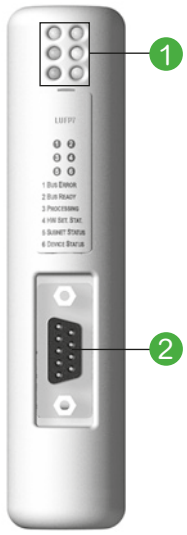

561512.eps

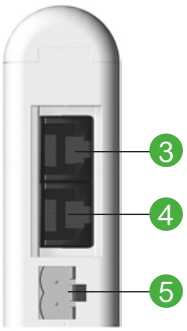

Communication gateway LUFP	
Description	**Reference**
Fipio / Modbus gateway	**LUFP1**
Profidus DP / Modbus gateway	**LUFP7**
DeviceNet / Modbus gateway	**LUFP9**

Description

Front panel of the product

1 LED indicating :
- communication status of the Modbus serial links,
- gateway status,
- communication status of the Fipio, Profibus DP or DeviceNet bus.

2 Connectors for connection to Fipio, Profibus DP or DeviceNet buses.

Underside of product

3 RJ45 connector for connection of the Modbus serial link
4 RJ45 connector for link to a PC
5 ⎓ 24 V power supply

Software set-up

For the Fipio bus, software set-up of the gateway is performed using either PL7 Micro/Junior/Pro software or ABC Configurator software.
For the Profibus DP and DeviceNet buses, software set-up is performed using ABC Configurator.
This software is included in the Ultra user's manual.

(1) Connection kit for PowerSuite software workshop.

Schemes:
page A4/70

Product references



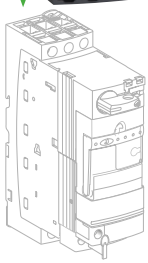

LUALB1



LUALF1



LA9LB920

Short-circuit current limiter block

To be connected in series and upstream of a Ultra starter-controller. It increases its ability to withstand the short circuit current from 50 kA to 100 or 130 kA under 400 V.

Principle: under the action of a short-circuit, the opening of two contacts of each phase of the limiter creates a resistive arc. The current then decreases to a value tolerable by a Ultra power base.

Limiter blocks and accessories

Description	Breaking capacity Iq (kA)		Ie (A)	Ith (A)	Mounting	Unit reference
	≤ 440 V	690 V				
Limiter-disconnector (1 x LUAFL1 cartridge supplied)	130	70	-	32	Direct on power base up to 15 kW/32 A	**LUALB1** (1)
Limiter	100	35	32	63	Separate	**LA9LB920** (2)
limiter cartridge for LUALB1	130	70	-	-	Limiter-disconnector	**LUALF1**

(1) Must be connected to one power base only.
(2) Can be connected to multiple Ultra power bases in parallel with limitation :
- *Total Ith max 63 A*
- *Total nominal current (Ie) 32 A from motor with simultaneous start (**LA9LB920** could not withstand higher inrush peak current)*

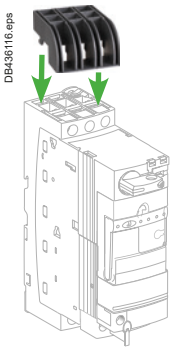

LU9SP0

Phase barrier

Ensures a complementary electrical insulation between phases.
690 V AC network: compulsory.
440 V AC network: compulsory when assembling a UL508 type E compliant motor starter (Self Protected Starter).

Description	Use	Mounting	Reference
Phase separator	LUB or LU2B 12 or 120 LUB or LU2B 32 or 320 LUALB1	Live terminals L1, L2, L3	**LU9SP0**

Clip-in labels

Can be clipped on any Ultra power base, on LU6MB0●● inverser block, and Linergy HK busbar system.

Marking accessory

Description	Sold by lot of	Reference per unit
Clip-in label 8 x 18 mm	100	**LAD90**

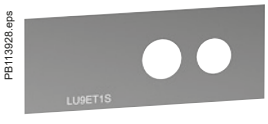

LU9ET1S

Safety-chain identification - Red label

The red sticker is dedicated to Ultra LUCA, LUCB, LUCC, LUCD and LUCL control units.

Description	Reference per unit
Retrofit safety-chain identification sticker	**LU9ET1S**

Characteristics: page A4/50
Dimensions: page A4/63

Product references

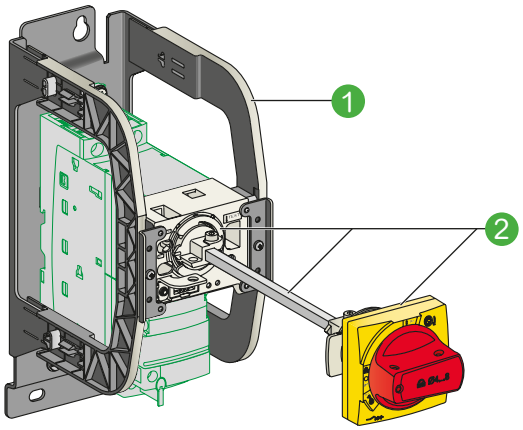

DB414540.eps

LU9APN21 mounting kit



PB106291.eps

GVAPA1 long shaft

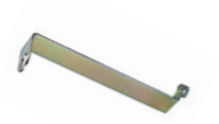

PB121242.eps

GVAPK12 shaft support plate for deep enclosure



PB106296.eps

GVAPP1 spacer base (retrofit accessory)



PB106289.eps

GVAPR54 red handle, IP 54



GVAPYPHP external handle protection frame



PB106297.eps

GVAPL01 "Laser square" plotting tool

Extended rotary handle

Allows a circuit breaker or a Ultra starter-controller installed in back of an enclosure to be operated from the front panel.
The rotary handle can be black or red/yellow, IP54 or IP65. It includes a function for locking the circuit breaker or the starter in the O (OFF) or | (ON) position (depending on the type of rotary handle) by means of up to 3 padlocks with a shank diameter of 4 to 8 mm.
The extension shaft must be adjusted to the depth of the enclosure.
The IP54 rotary handle is fixed with a nut (Ø22) to make it easier to assemble.

Mounting kit

1 Ultra power base bracket; its horseshoe shaped sides hold the rotary mechanism facing the original handle.
2 Mechanism, shaft and handle; the shaft enters the handle attached to the door during closing.

Long shaft

■ to be cut to the required length. Equipped with a connection endpiece.

Shaft support plate for deep enclosure

■ Provides horizontal guiding of the shaft, when the door is open.

Spacer base (retrofit accessory)

■ Fixed on a side of the box, for heightening an GVAP●●● handle.

Handle

■ Delivered as a single unit, to be fitted on a side of the enclosure.
Note: references below are suitable for Ultra power bases after 2004.

"Laser Square" Tool

■ On the principle of an angle extended with a laser beam, the "Laser Square" facilitates tracing the piercing marks on the door or the sides of an enclosure.

"Safety" stickers

■ Marking: Electrical hazard, etc.

Description		Tripping indication	Reference
Mounting kit	Black handle, with error status, IP54	●	**LU9APN21**
	Red handle, with error status, IP54	●	**LU9APN22**
	Red handle, without error status, IP65	-	**LU9APN24**
Separate elements	Long shaft = 315 mm	-	**GVAPA1**
	Shaft (≥ 300 mm) support plate for deep enclosure	-	**GVAPK12**
	Spacer base	-	**GVAPP1**
	Black handle, IP54	●	**GVAPB54**
	Red handle, IP54	●	**GVAPR54**
	Red handle, IP65		**GVAPR65**
Tool	"Laser square" plotting tool		**GVAPL01**
"Safety" stickers	German (x10)		**GVAPSDE**
	Chinese (x10)		**GVAPSCN**
	Portuguese (x10)		**GVAPSPT**
	Italian (x10)		**GVAPSIT**
External handle protection frame for U	Yellow frame		**GVAPYPHP**
	Black frame		**GVAPBPHP**

Dimensions:
page A4/63

Product references

PB111807_104.eps



MCC drawers (Motor Control Center)

The drawers are composed of:

- a fixed part, in the frame of the panel,
- a fully withdrawable part, integrating the protection, control and automation components.

With a height of 3/4/6/8/12/18/24/36 modules, they allow the assembling of motor protection/control feeders:

- Direct, one direction of rotation
- Direct, 2 directions of rotation
- Star-delta
- Dahlander (2 speeds)
- 2-speed, separate winding
- Motor drives from 0 to 500 kW
- Soft starters of 0 to 75 kW.

DB123404.eps

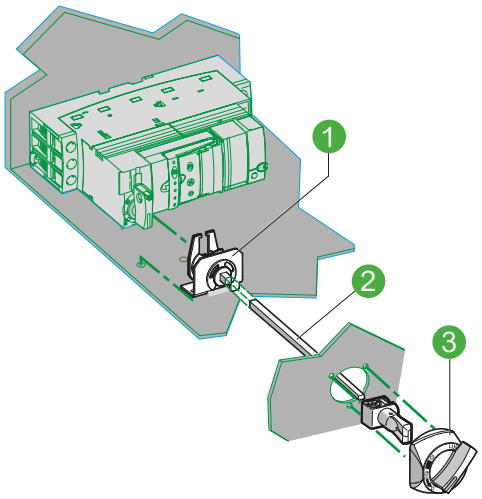

Mounting kit and handle for MCC drawer

Together, this provides manual control of a Ultra starter-controller from the front face of the drawer.
As the clamping part on top of Ultra control pad is open, the kit may be used on Ultra power bases before 2005.

Mounting kit + small handle		
Description	**Item**	**Reference**
Handle with mounting kit for MCC drawer	1 + 2 + 3	**LU9AP20**

PB121243.eps



Product references

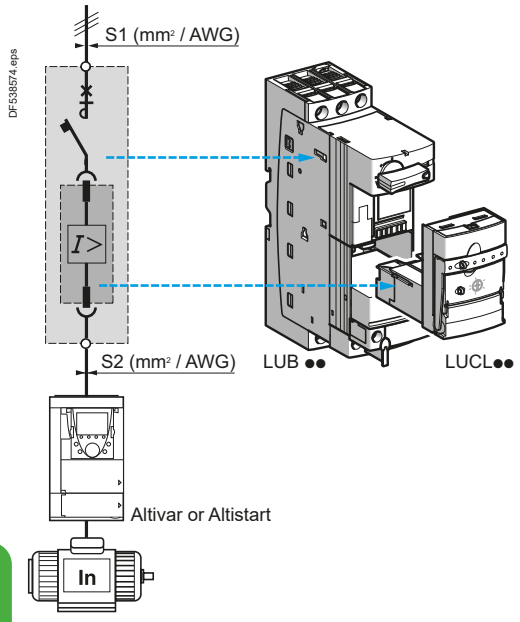

Introduction

When installed upstream of a variable speed controller or soft start unit, control unit LUCL●●, used in conjunction with an LUB12 or LUB32 power base, provides:
- isolation,
- short-circuit protection of the motor starter.

(variable speed controller-based or soft start unit-based motor starters).

Note: *control unit LUCL, when used in conjunction with power base LUB12 or LUB32, conforms to standard IEC 60947-6-2.*

Installation regulations

When the length of the cable between the Ultra starter and the variable speed controller is more than 1.5 m, the c.s.a. of the cable between the variable speed controller and the Ultra starter (S2) must be equal to the c.s.a. of the cable upstream of Ultra (S1).



Description of LUCL magnetic control unit

1. Extraction and locking handle
2. Sealing of locking handle
3. Dial for magnetic adjustment of motor In
4. Locking of settings by sealing the transparent cover

References

Description	Line current of the variable speed controller or soft start unit	Reference (1)
	A	
Magnetic control unit	0.15…0.6	**LUCLX6●●**
	0.35…1.4	**LUCL1X●●**
	1.25…5	**LUCL05●●**
	3…12	**LUCL12●●**
	4.5…18	**LUCL18●●**
	8…32	**LUCL32●●**

(1) Standard control circuit voltage:

Volts	24	48…72	110…240
⎓	BL (2) (3)	–	–
∿	B	–	–
⎓ or ∿	–	ES (4)	FU (5)

Please check the availability of your variant in the index page A4/42. The SEARCH function of your viewer can be used.

(2) Voltage code to be used for a starter-controller with communication module.
(3) d.c. voltage with maximum ripple of ±10 %.
(4) ⎓: 48…72 V, ∿: 48 V.
(5) ⎓: 110…220 V, ∿: 110…240 V.

Characteristics:
pages A4/48 and A4/49

Product references

Control unit and associated power base selection

Functions provided	Maximum motor power ratings 50/60 Hz			Power base reference	Control unit reference	Line current
	< 400/415 V	500 V	690 V			
	KW	KW	KW			A
■ Short-circuit protection ■ Manual reset	0.09	–	–	**LUB12 or LUB32**	**LUCLX6●●**	0.15…0.6
	0.25	–	–	**LUB12 or LUB32**	**LUCL1X●●**	0.35…1.4
	1.5	2.2	3	**LUB12 or LUB32**	**LUCL05●●**	1.25…5
	5.5	5.5	9	**LUB12 or LUB32**	**LUCL12●●**	3…12
	7.5	9	15	**LUB32**	**LUCL18●●**	4.5…18
	15	15	18.5	**LUB32**	**LUCL32●●**	8…32

Operating characteristics

Control units		Standard	Advanced				Multifunction
		LUCA	LUCB	LUCC	LUCD	LUCL	LUCM
Thermal overload protection							
Over current protection		14.2 x the setting current					3 to 17 x the setting current
Short-circuit protection		13 x Ir max (max current setting)					
Protection against phase loss							
Protection against phase imbalance							
Earth fault protection (equipment protection only)							
Tripping class		10		10	20		5…30
Motor type		3-phase		Single-phase	3-phase	Single-phase and 3-phase	
Thermal overload test function							
Overtorque							
No-load running							
Long starting time							
Reset method	Manual						Parameters can be set
	Automatic or remote		With function module, or parameters can be set via the bus with a communication module (see page 24614/2).				Parameters can be set
							Parameters can be set via the bus with a communication module (see page 24614/2).

Integrated function *Non integrated function* *Function provided with accessory*

Compatibility

Compatibility of control unit LUCL●● with		References	Functions
The controller	No	LUTM	Controller (without thermal overload protection)
Add-on contact blocks with fault signalling and auxiliary contacts	Yes	LUA1C11	Add-on contact blocks with fault signalling (1 N/O + 1 N/C)
		LUA1C20	Add-on contact blocks with fault signalling (2 N/O)
		LUFN20	Auxiliary contacts (2 N/O)
		LUFN11	Auxiliary contacts (1 N/O + 1 N/C)
		LUFN02	Auxiliary contacts (2 N/C)
Communication modules	Yes	ASILUFC5 and ASILUFC51	AS-Interface communication modules
		LUFC00	Parallel wiring module
		LULC07	Profibus DP communication module (1 output/2 inputs)
		LULC08	CANopen communication module (1 output/2 inputs)
		LULC09	DeviceNet communication module (1 output/2 inputs)
		LULC15	Advantys STB communication module (1 output/2 inputs)
		LULC033	Modbus communication module (1 output/2 inputs)
Function modules	No	LUFW10	Alarm function module
		LUFDH11	Thermal overload signalling module with manual reset
		LUFDA01	Thermal overload signalling module with automatic or remote reset (1 N/C)
		LUFDA10	Thermal overload signalling module with automatic or remote reset (1 N/O)
		LUFV2	Motor load indication module

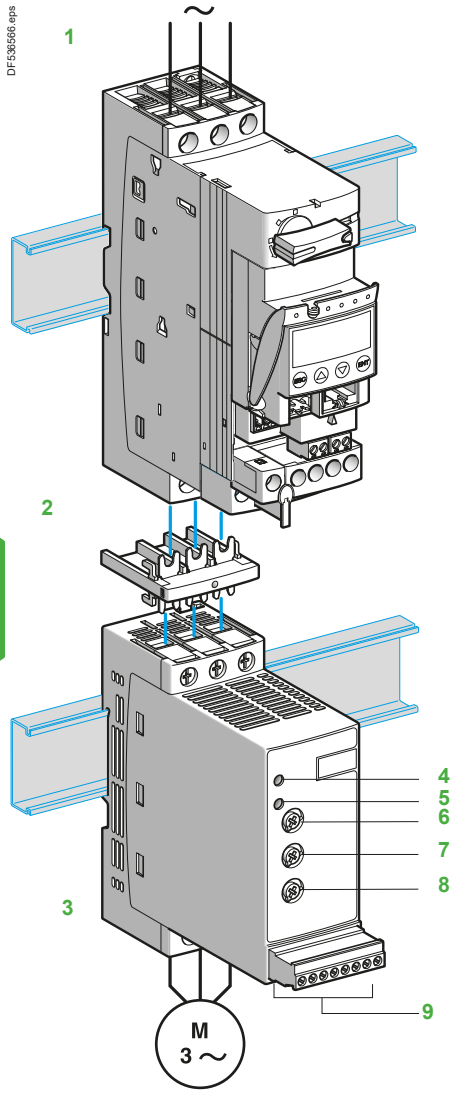

Introduction

The Altistart U01 is a soft start/soft stop unit for asynchronous motors. It is designed primarily for combinations with Ultra controller-starters.

When combined with a Ultra **1** controller by means of a connector **2**, the Altistart U01 **3** is a power option which provides the “Soft start/soft stop” function. The result is a unique, innovative motor starter.

Using the Altistart U01 starter enhances the starting performance of asynchronous motors by allowing them to start gradually, smoothly and in a controlled manner. It prevents mechanical shocks, which lead to wear and tear, and limits the amount of maintenance work and production downtime.
The Altistart U01 limits the starting torque and current peaks on starting, on machines which do not require a high starting torque.

The Altistart U01 is designed for the following simple applications:
- Conveyors
- Conveyor belts
- Pumps
- Fans
- Compressors
- Automatic doors and gates
- Small cranes
- Belt-driven machines, etc.

The Altistart U01 is compact and easy to install. It complies with standards IEC/EN 60947-4-2, carries UL, CSA, C-Tick, CCC certifications and CE marking.

- **ATSU01N2●●LT soft start/soft stop units**
  - Control two phases of the motor power supply to limit the starting current and for deceleration
  - Internal bypass relay
  - Motor power ratings ranging from 0.75 kW to 15 kW
  - Motor supply voltages ranging from 200 V to 480 V, 50/60 Hz.

An external power supply is required for controlling the starter.

Description

- Altistart U01 soft start/soft stop units are equipped with:
  - A potentiometer for setting the starting time **6**
  - A potentiometer for setting the deceleration time **8**
  - A potentiometer for adjusting the start voltage threshold according to the motor load **7**
  - 1 green LED **4** to indicate that the unit is switched on
  - 1 yellow LED **5** **to indicate that the motor is powered at nominal voltage, if it is connected to the starter**
  - A connector **9**:
    - 2 logic inputs for Run/Stop commands
    - 1 logic input for the BOOST function
    - 1 logic output to indicate the end of starting
    - 1 relay output to indicate the starter has a power supply fault or the motor has reached a standstill at the end of the deceleration stage

Characteristics: pages A4/77 and A4/78
References: page A4/38
Dimensions: page A4/79
Schemes: pages A4/80 to A4/83

ATSU01N2●●●LT soft start unit functions

■ 2-wire control
The run and stop commands are controlled by a single logic input. State 1 of logic input LI2 controls starting and state 0 controls stopping.

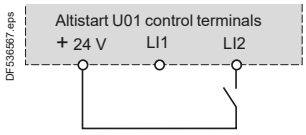

Wiring diagram for 2-wire control

■ 3-wire control
The run and stop commands are controlled by 2 different logic inputs.
Stopping is achieved when logic input LI1 opens (state 0).
The pulse on input LI2 is stored until input LI1 opens.

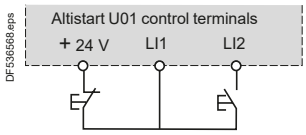

Wiring diagram for 3-wire control

■ Starting time
Controlling the starting time means that the time of the voltage ramp applied to the motor can be adjusted to obtain a gradual starting time, dependent on the motor load.

■ Voltage boost function via logic input
Activating the BOOST logic input enables the function for supplying a starting overtorque capable of overcoming any mechanical friction.
When the input is at state 1, the function is active (input connected to the + 24 V) and the starter applies a fixed voltage to the motor for a limited time before starting.

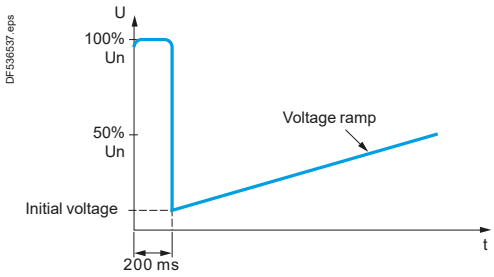

Application of a voltage boost equal to 100% of the nominal motor voltage

■ End of starting
○ application function for logic output LO1
ATSU01N2●●LT soft start/soft stop units are equipped with an open collector logic output LO, which indicates the end of starting when the motor has reached nominal speed.

Ultra motor starters
Ref.

Product references



ATSU01N222LT

Soft start/soft stop units for 0.75 to 15 kW motors (can be combined with the Ultra starter)

Motor power (1)				Starter	
230 V	230 V	400 V	460 V	Nominal current	Reference
kW	*HP*	kW	*HP*	A	
3-phase supply voltage: 200…480 V 50/60 Hz					
0.75 1.1	*1* *1.5*	1.5 2.2 3	*2* *3*	6	**ATSU01N206LT**
1.5 –	*2* –	– 4	*5* –	9	**ATSU01N209LT**
2.2 3	*3* –	5.5 –	*7.5* –	12	**ATSU01N212LT**
4 5.5	*5* *7.5*	7.5 11	*10* *15*	22	**ATSU01N222LT**
7.5	*10*	15	*20*	32	**ATSU01N232LT**

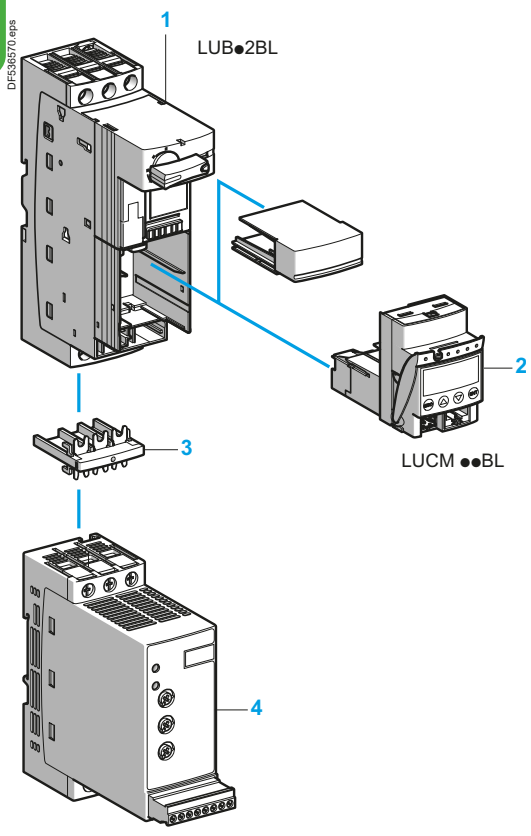

ATSU 01N2●●LT

Accessorie

Description	Used for starter	Reference
Power connector between ATSU01N2●●LT and U	ATSU01N2●●LT	**VW3G4104**

Ultra starter and soft start unit combinations

Numerous possibilities for combinations and options are offered.
Please consult the “Ultra Starters-open version” specialist catalogue.

Motor power Voltage			Soft starter	U	
				Power base	Control unit (2)
230 V kW/*HP*	400 V kW	460 V *HP*			
0.75/*1*	1.5	*2*	ATSU01N206LT	LUB12	LUC●05BL
1.1/*1.5*	2.2/3	*3*	ATSU01N206LT	LUB12	LUC●12BL
1.5/*2*	–	–	ATSU01N209LT	LUB12	LUC●12BL
–	4	*5*	ATSU01N209LT	LUB12	LUC●12BL
2.2/*3*	–	–	ATSU01N212LT	LUB12	LUC●12BL
3/–	5.5	*7.5*	ATSU01N212LT	LUB32	LUC●18BL
4/*5*	7.5	*10*	ATSU01N222LT	LUB32	LUC●18BL
5.5/*7.5*	11	*15*	ATSU01N222LT	LUB32	LUC●32BL
7.5/*10*	15	*20*	ATSU01N232LT	LUB32	LUC●32BL

Example of a starter-motor combination with:
1 non-reversing power base for DOL starting (LUB●2BL)
2 control unit (LUCM●●BL)
3 power connector (VW3G4104)
4 Altistart U01soft start/soft stop unit (ATSU01N2●●LT)

(1) Standard motor power ratings, HP power ratings indicated according to standard UL508.
(2) Depending on the configuration of the chosen Ultra starter, replace the ● with A for standard, B for expandable, and M for multifunction.

Introduction: pages A4/36 and A4/37
Characteristics: pages A4/77 and A4/78
Dimensions: page A4/79
Schemes: pages A4/80 to A4/83

Product references



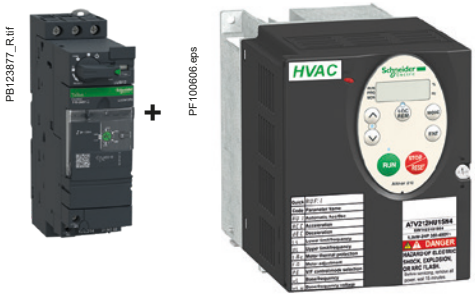

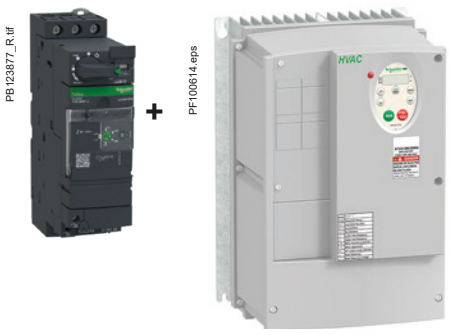

Soft starter coordination

The standard defines tests at different levels of current; the purpose of these tests is to place the equipment in extreme conditions.
The standard defines 2 types of coordination, according to the condition of the components after testing: type 1 and type 2.
Type 1 coordination requires that in a short-circuit condition, the contactor or starter must not present any danger to personnel or installations and must not be able to resume operation without repair or the replacement of parts.
The product combinations given below provide type 1 coordination

Soft start-soft stop unit/Ultra starter controller combination with magnetic protection

Ultra / Altistart 48: type 1 coordination

Power 400 V (kW)	Ultra references (protection + power switching)	Soft starter reference	
		Class 10	Class 20
5.5	LUB32 + LUCL32 or LUCL18	–	**ATS48D17**
7.5	LUB32 + LUCL32	**ATS48D17**	**ATS48D22**
11	LUB32 + LUCL32	**ATS48D22**	**ATS48D32**
15	LUB32 + LUCL32	**ATS48D32**	**ATS48D38**

Variable speed controller/Ultra starter controller combination with magnetic protection

Ultra / Altivar 212 UL Type 1/IP 20

Power 400 V (kW)	Ultra references (protection + power switching)	Variable speed controller reference
0.75	LUB12 + LUCL05	**ATV212H075N4**
		ATV212HU15N4
2.2	LUB12 + LUCL12	**ATV212HU22N4**
3	LUB12 + LUCL12	**ATV212HU30N4**
4	LUB12 + LUCL12	**ATV212HU40N4**
5.5	LUB32 + LUCL32 or LUCL18	**ATV212HU55N4**
7.5	LUB32 + LUCL32 or LUCL18	**ATV212HU75N4**
11	LUB32 + LUCL32	**ATV212HD11N4**
15	LUB32 + LUCL32	**ATV212HD15N4**

Ultra / Altivar 212 IP 54

Power 400 V (kW)	Ultra references (protection + power switching)	Variable speed controller reference
0.75	LUB12 + LUCL05	**ATV212W075N4**
1.5	LUB12 + LUCL12 or LUCL05	**ATV212WU15N4**
2.2	LUB12 + LUCL12	**ATV212WU22N4**
3	LUB12 + LUCL12	**ATV212WU30N4**
4	LUB12 + LUCL12	**ATV212WU40N4**
5.5	LUB32 + LUCL32 or LUCL18	**ATV212WU55N4**
7.5	LUB32 + LUCL32 or LUCL18	**ATV212WU75N4**
11	LUB32 + LUCL32	**ATV212WD11N4**
15	LUB32 + LUCL32	**ATV212WD15N4**

Products references





Variable speed controller/Ultra starter controller combination with magnetic protection (continued)

Ultra / Altivar 320

Power 400 V (kW)	Ultra references (protection + power switching)	Variable speed controller reference
0.37	LUB12 + LUCL05	**ATV320U04N4C**
0.55	LUB12 + LUCL05	**ATV320U06N4C**
0.75	LUB12 + LUCL05	**ATV320U07N4C**
1.1	LUB12 + LUCL12	**ATV320U11N4C**
1.5	LUB12 + LUCL12	**ATV320U15N4C**
2.2	LUB12 + LUCL12	**ATV320U22N4C**
3	LUB32 + LUCL18	**ATV320U30N4C**
4	LUB32 + LUCL18	**ATV320U40N4C**
5.5	LUB32 + LUCL32	**ATV320U55N4C**
7.5	LUB32 + LUCL32	**ATV320U75N4C**

Ultra / Altivar 630

Power 400V (kW)	Ultra references (protection + power switching)	Variable speed controller reference
0.75	LUB12 + LUCL05	**ATV630U07N4**
1.5	LUB12 + LUCL12	**ATV630U15N4**
2.2	LUB12 + LUCL12	**ATV630U22N4**
3	LUB32 + LUCL18	**ATV630U30N4**
4	LUB32 + LUCL18	**ATV630U40N4**
5.5	LUB32 + LUCL32	**ATV630U55N4**
7.5	LUB32 + LUCL32	**ATV630U75N4**

Product references

ASILUFC5	LU9R30	LUCB12FU	LUCD32FU
ASILUFC51	LU9RCD03	LUCB18B	LUCD38BL
GV1G10	LU9RCD10	LUCB18BL	LUCD38FU
GVAPA1	LU9RCD50	LUCB18ES	LUCDT1BL
GVAPA2	LU9RDD03	LUCB18FU	LUCDX6BL
GVAPB54S	LU9RDD30	LUCB1XB	LUCDX6FU
GVAPK12	LU9RFL15	LUCB1XBL	LUCL05B
GVAPL01	LU9RPB010	LUCB1XES	LUCL05BL
GVAPP1	LU9RPB100	LUCB1XFU	LUCL05ES
GVAPR65S	LU9RPB400	LUCB32B	LUCL05FU
LA9LB920	LU9SP0	LUCB32BL	LUCL12B
LU2B12B	LUA1C11	LUCB32ES	LUCL12BL
LU2B12BL	LUA1C20	LUCB32FU	LUCL12ES
LU2B12ES	LUA8E20	LUCB38BL	LUCL12FU
LU2B12FU	LUALB1	LUCB38FU	LUCL18B
LU2B32B	LUALF1	LUCBT1BL	LUCL18BL
LU2B32BL	LUB12	LUCBX6B	LUCL18ES
LU2B32ES	LUB120	LUCBX6BL	LUCL18FU
LU2B32FU	LUB32	LUCBX6FU	LUCL1XB
LU2B38BL	LUB320	LUCC05B	LUCL1XBL
LU2B38FU	LUB32NR	LUCC05BL	LUCL1XFU
LU2BA0BL	LUB38	LUCC05ES	LUCL32B
LU2BA0ES	LUB380	LUCC05FU	LUCL32BL
LU2BB0BL	LUCA05B	LUCC12B	LUCL32FU
LU2MB0B	LUCA05BL	LUCC12BL	LUCL38BL
LU2MB0BL	LUCA05ES	LUCC12ES	LUCL38FU
LU2MB0ES	LUCA05FU	LUCC12FU	LUCLX6BL
LU2MB0FU	LUCA12B	LUCC18BL	LUCM05BL
LU6MB0B	LUCA12BL	LUCC18FU	LUCM12BL
LU6MB0BL	LUCA12ES	LUCC1XB	LUCM18BL
LU6MB0ES	LUCA12FU	LUCC1XBL	LUCM1XBL
LU6MB0FU	LUCA18B	LUCC1XES	LUCM32BL
LU9AD7	LUCA18BL	LUCC1XFU	LUCMT1BL
LU9AP00	LUCA18ES	LUCC32B	LUCMX6BL
LU9AP11	LUCA18FU	LUCC32BL	LUFC00
LU9AP20	LUCA1XB	LUCC32FU	LUFDA01
LU9APN21	LUCA1XBL	LUCCX6B	LUFDA10
LU9APN22	LUCA1XES	LUCCX6BL	LUFDH11
LU9APN24	LUCA1XFU	LUCCX6FU	LUFN02
LU9BN11	LUCA32B	LUCD05B	LUFN11
LU9BN11C	LUCA32BL	LUCD05BL	LUFN20
LU9BN11L	LUCA32ES	LUCD05ES	LUFP1
LU9C1	LUCA32FU	LUCD05FU	LUFP7
LU9C2	LUCA38BL	LUCD12B	LUFP9
LU9ET1S	LUCA38FU	LUCD12BL	LUFV2
LU9G02	LUCAX6B	LUCD12ES	LUFW10
LU9G03	LUCAX6BL	LUCD12FU	LULC031
LU9GC3	LUCAX6ES	LUCD18BL	LULC033
LU9GC7	LUCAX6FU	LUCD18FU	LULC07
LU9M1	LUCB05B	LUCD1XB	LULC08
LU9MR1	LUCB05BL	LUCD1XBL	LULC09
LU9MR1C	LUCB05ES	LUCD1XES	LULC15
LU9MRC	LUCB05FU	LUCD1XFU	
LU9MRL	LUCB12B	LUCD32B	
LU9R03	LUCB12BL	LUCD32BL	
LU9R10	LUCB12ES	LUCD32ES	

This document is current. Click on the product reference to get the most recent availability status (hyperlink to **se.com** product datasheet). If your product variant is no longer available, please consult your distributor or regional sales office.

Technical Data for Designers

Contents

Characteristics ..... A4/44 to A4/55
Curves ..... A4/56 to A4/61
Dimensions ..... A4/62 to A4/63
Schemes ..... A4/64 to A4/76
Altistart U01 Soft starter ..... A4/77 to A4/83

Characteristics

Environment

Product certifications			UL, CSA, CCC, GOST, ASEFA, UKCA.
			ABS, BV, DNV, GL, LROS. ATEX.
Conforming to standards			IEC/EN 60947-6-2, CSA-22.2 N° 60947-4-1-14 UL 60947-4-1: with phase barrier LU9 SP0
Rated insulation voltage (Ui)	Conforming to IEC/EN 60947-1, overvoltage category III, degree of pollution: 3	**V**	690
	Conforming to UL508, CSA C22-2 n°14	**V**	600
Rated impulse withstand voltage (Uimp)	Conforming to IEC/EN 60947-6-2	**kV**	6
Degree of protection Conforming to IEC/EN 60947-1 (protection against direct finger contact)	Front panel outside connection zone		IP 40
	Front panel and wired terminals		IP 20
	Other faces		IP 20
Protective treatment	Conforming to IEC/EN 60068		"TH"
	Conforming to IEC/EN 60068-2-30	**Cycles**	12
	Conforming to IEC/EN 60068-2-11	**h**	48
Ambient air temperature around the device	Storage	**°C**	-40…+85
	Operation	**°C**	Power bases and standard and advanced control units: -25… +70. (At temperatures above 60°C and up to 70°C, for starter-controller LUB32, LUB38, leave a minimum gap of 9 mm between products).
			Power bases and multifunction control units: -25…+60. (At temperatures above 45 °C, leave a minimum gap of 9 mm between products. At temperatures above 55 °C and up to 60 °C, leave a gap of 20 mm between products.)
Maximum operating altitude		**m**	2000
Operating positions	In relation to normal vertical mounting plane		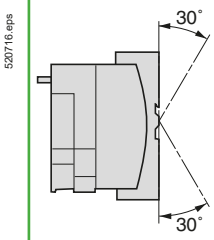 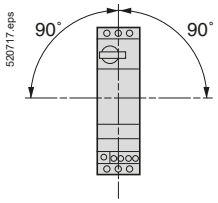
Flame resistance	Conforming to UL 94		V2
	Conforming to IEC/EN 60695-2-12	**°C**	960 (parts supporting live components)
		°C	650
Environmental restrictions			Cadmium and silicone-free, recyclable
Shock resistance 1/2 sine wave = 11 ms	Conforming to IEC/EN 60068-2-27 (1)		Power poles open: 10 gn
			Power poles closed: 15 gn
Vibration resistance 5…300 Hz	Conforming to IEC/EN 60068-2-6 (1)		Power poles open: 2 gn
			Power poles closed: 4 gn (2)
Resistance to electrostatic discharge	Conforming to IEC/EN 61000-4-2	**kV**	In open air: 8 - Level 3
		kV	On contact: 8 - Level 4
Immunity to radiated high-frequency disturbance	Conforming to IEC/EN 61000-4-3	**V/m**	10 - Level 3
Immunity to fast transient currents	Conforming to IEC/EN 61000-4-4	**kV**	All circuits except for serial link: 4 - Level 4
		kV	Serial link: 2 - Level 3
Immunity to dissipated shock waves	Conforming to IEC/EN 60947-6-2		Common mode / Serial mode
	Uc ∿ 24…240 V, Uc ⎓ 48…220 V	**kV**	2 / 1
	Uc = 24 V ⎓		Not applicable
Immunity to conducted high-frequency disturbance	Conforming to IEC/EN 61000-4-6	**V**	10
Radiated emission and conducted	Conforming to CISPR 11 and EN 55011		Class A

(1) Without modifying the contact states, in the most unfavourable direction.
(2) 2 gn with Advantys STB or CANopen communication modules.

References: pages A4/10 to A4/14
Curves: pages A4/56 to A4/61
Dimensions: pages A4/62 and A4/63
Schemes: pages A4/64 to A4/76

Characteristics

Power circuit connection characteristics

Connection to Ø4 mm screw clamp terminals

Power base, control unit or reverser block type			LUB12 + LUCA or LUCB or LUCC or LUCD	LUB32/LUB38 + LUCA or LUCB or LUCC or LUCD	LUB12 + LUCM	LUB32 + LUCM	LU2B LU2M LU6M
Flexible cable without cable end	1 conductor	mm²	2.5…10	2.5…10	2.5…10	2.5…10	2.5…10
	2 conductors	mm²	1.5…6	1.5…6	1.5…6	1.5…6	1.5…6
Flexible cable with cable end	1 conductor	mm²	1…6	1…6	1…6	1…6	1…6
	2 conductors	mm²	1…6	1…6	1…6	1…6	1…6
Solid cable without cable end	1 conductor	mm²	1…10	1…10	1…10	1…10	1…10
	2 conductors	mm²	1…6	1…6	1…6	1…6	1…6
Screwdriver			Philips n° 2 or flat screwdriver: Ø6 mm				
Tightening torque		N.m	1.9…2.5	1.9…2.5	1.9…2.5	1.9…2.5	1.9…2.5

Control circuit connection characteristics

Connection to Ø3 mm screw clamp terminals

Flexible cable without cable end	1 conductor	mm²	0.75…1.5	0.75…1.5	0.75…1.5	0.75…1.5	0.75…1.5
	2 conductors	mm²	0.75…1.5	0.75…1.5	0.75…1.5	0.75…1.5	0.75…1.5
Flexible cable with cable end	1 conductor	mm²	0.34…1.5	0.34…1.5	0.34…1.5	0.34…1.5	0.34…1.5
	2 conductors	mm²	0.34…1.5	0.34…1.5	0.34…1.5	0.34…1.5	0.34…1.5
Solid cable without cable end	1 conductor	mm²	0.75…1.5	0.75…1.5	0.75…1.5	0.75…1.5	0.75…1.5
	2 conductors	mm²	0.75…1.5	0.75…1.5	0.75…1.5	0.75…1.5	0.75…1.5
Screwdriver			Philips n° 1 or flat screwdriver: Ø5 mm				
Tightening torque		N.m	0.8…1.2	0.8…1.2	0.8…1.2	0.8…1.2	0.8…1.2

Control circuit characteristics

Rated voltage of control circuit	∿ 50/60 Hz	V	24…240	24…240	–	–	–
	⎓	V	24…220	24…220	24	24	–
Voltage limits	⎓ 24 V (1)	V	20…27	20…27	20…28	20…28	–
Operation	∿ 24 V	V	20…26.5	20…26.5	–	–	–
	∿ or ⎓ 48…72 V	V	∿ 38.5…72. ⎓ 38.5…93		–	–	–
	∿ 110…240 V	V	∿ 88…264	∿ 88…264	–	–	–
	⎓ 110…220 V	V	⎓ 88…242	⎓ 88…242	–	–	–
Drop-out	⎓ 24 V	V	14.5	14.5	14.5	14.5	–
	∿ 24 V	V	14.5	14.5	–	–	–
	∿ or ⎓ 48…72 V	V	29	29	–	–	–
	∿ 110…240 V, ⎓ 110…220 V	V	55	55	–	–	–
Typical consumption	⎓ 24 V	mA	130	220	150	200	120
I max while closing	∿ 24 V	mA	140	220	–	–	2360
	∿ or ⎓ 48…72 V	mA	280	280	–	–	2300
	∿ 110…240 V, ⎓ 110…220 V	mA	280	280	–	–	1000
I rms sealed	⎓ 24 V	mA	60	80	70	75	120
	∿ 24 V	mA	70	90	–	–	(2)
	∿ or ⎓ 48…72 V	mA	35	45	–	–	(2)
	∿ 110…240 V, ⎓ 110…220 V	mA	35	25	–	–	(2)
Heat dissipation		W	2	3	1.7	1.8	–
Operating time	Closing	ms	24 V: 70; 48 V: 60; ≥ 72 V: 50		75	65	–
	Opening	ms	35	35	35	35	–
Resistance to micro-breaks		ms	3	3	3	3	–
Resistance to voltage dips	IEC/EN 61000-4-11		At least 70 % of Uc for 500 ms				–
Mechanical durability	In millions of operating cycles		15	15	15	15	–
Maximum operating rate	In operating cycles per hour		3600	3600	3600	3600	–

Main pole characteristics

Number of poles			3	3	3	3	–
Isolation conforming to IEC/EN 60947-1	Possible		Yes	Yes	Yes	Yes	–
	Padlocking		1 padlock with Ø6.9 mm shank				–
Rated thermal current		A	12	32/38	12	32	–
Rated operational current (Ue ≤ 440V)	To IEC/ EN 60947-6-2 Category AC-41		θ ≤ 70°C: 12 A	θ ≤ 70°C: 32/38 A	θ ≤ 55°C: 12 A	θ ≤ 55°C: 32 A	–
	Category AC-43		θ ≤ 70°C: 12 A	θ ≤ 70°C: 32/38 A	θ ≤ 55°C: 12 A	θ ≤ 55°C: 32 A	–
Rated operational voltage		V	690 (3)	690 (3)	690 (3)	690 (3)	–
Frequency limits	Of the operating current	Hz	40…60	40…60	40…60	40…60	–
Power dissipated in the power circuits	Operational current	A	3 6 9 12	18 25 32 38			–
	Power dissipated in all three poles	W	0.1 0.3 0.6 1.1	2.4 4.6 7.5 10.6			–
Rated breaking capacity on short-circuit		V	230 440	500 690			–
		kA	50 50 (25 for LUB38)	10 4			–
Total breaking time		ms	2 2	2			–
Thermal limit	With Isc max on 440 V	kA²s	90	120	90	120	–

(1) Voltage with maximum ripple of ±10 %. *(2) No consumption sealed.* *(3) For 690 V, use phase barrier **LU9SP0**.*

References: pages A4/10 to A4/14
Curves: pages A4/56 to A4/61
Dimensions: pages A4/62 and A4/63
Schemes: pages A4/64 to A4/76

Characteristics

Specific characteristics of power bases LU2B and reverser blocks LU2M or LU6M

Duration of inrush phase		∼ 50/60 Hz	**ms**	25
		⎓	**ms**	15
Maximum operating time	Without change of direction		**ms**	75
	With change of direction		**ms**	150

General characteristics of auxiliary contacts

Conventional thermal current (Ith)	For ambient temperature θ < 70 °C		**A**	5
Frequency of the operational current			**Hz**	Up to 400
Minimum switching capacity λ = 10^{-8}		U min	**V**	17
		I min	**mA**	5
Short-circuit protection	Conforming to IEC/EN 60947-5-1		**A**	gG fuse: 4
Short-time rating	Permissible for	1 s	**A**	30
		500 ms	**A**	40
		100 ms	**A**	50
Insulation resistance			**mΩ**	10
Non-overlap time	Guaranteed between N/C and N/O contacts		**ms**	2 (on energisation and on de-energisation)

Specific characteristics of auxiliary contacts built-into the power base

Linked contacts	Conforming to IEC/EN 60947-4-1		Each power base has 1 N/O contact and 1 N/C contact which are mechanically linked
Mirror contact	Conforming to IEC/EN 60947-1		The N/C contact fitted in each power base reliably represents the state of the power contacts (safety scheme)
Rated operational voltage (Ue)		**V**	Up to ∼ 690; ⎓ 250
Rated insulation voltage (Ui)	Conforming to IEC/EN 60947-5-1	**V**	690
	Conforming to UL, CSA	**V**	600

Specific characteristics of auxiliary contacts in modules LUFN, of auxiliary contacts LUA1 and of reverser blocks LU2M and LU6M

Rated operational voltage (Ue)		**V**	Up to ∼ 250; ⎓ 250
Rated insulation voltage (Ui)	Conforming to IEC/EN 60947-5-1	**V**	250
	Conforming to UL, CSA	**V**	250

Rated operational power of contacts
Conforming to IEC/EN 60947-5-1

a.c. supply, categories AC-14 and AC-15
Electrical durability (valid for up to 3600 operating cycles/hour) on an inductive load such as the coil of an electromagnet: making current (cos φ 0.7) = 10 times the power broken (cos φ = 0.4)

	V	24	48	115	230	400	440	690
1 million operating cycles	VA	60	120	280	560	960	1050	1440
3 million operating cycles	VA	16	32	80	160	280	300	420
10 million operating cycles	VA	4	8	20	40	70	80	100

d.c. supply, category DC-13
Electrical durability (valid for up to 1200 operating cycles/hour) on an inductive load such as the coil of an electromagnet, without economy resistor, the time constant increasing with the load.

V	24	48	125	250
W	120	90	75	68
W	70	50	38	33
W	25	18	14	12

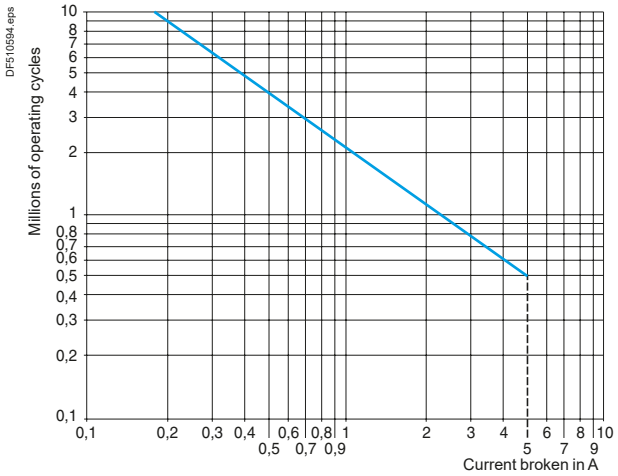

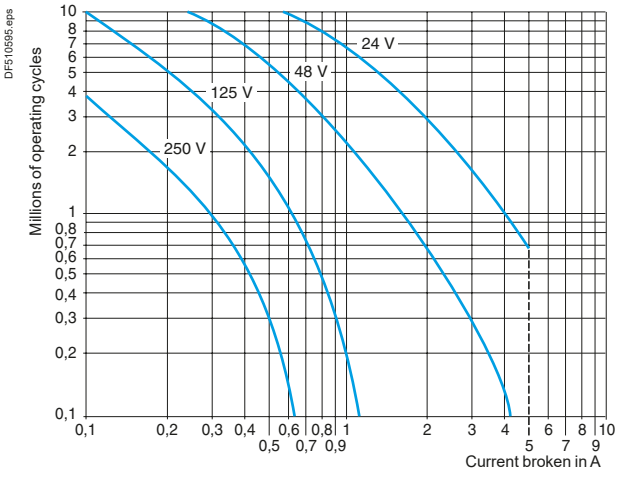

References: pages A4/10 to A4/14
Curves: pages A4/56 to A4/61
Dimensions: pages A4/62 and A4/63
Schemes: pages A4/64 to A4/76

Life Is On Schneider Electric

Characteristics

Characteristics of standard control units LUCA

Protection	Motor type		3-phase
	Conforming to standard		IEC/EN 60947-6-2, UL 60947-4-1, CSA C22-2 n°14
Overload protection	Tripping class conforming to UL 508, IEC/EN 60947-6-2		10
	Frequency limits of the operational current	**Hz**	40…60
	Temperature compensation	**°C**	- 25…+ 70
	Protection against phase imbalance		Yes
Short-circuit protection	Tripping threshold		13 x Ir max (max current setting)
	Tripping tolerance		± 20 %

Characteristics of advanced control units LUCB, LUCC and LUCD

Control unit type			**LUCB**	**LUCC**	**LUCD**
Protection	Motor type		3-phase	Single-phase	3-phase
	Conforming to standard		IEC/EN 60947-6-2, CSA C22-2 n°14	IEC/EN 60947-6-2, CSA C22-2 n°14	IEC/EN 60947-6-2, CSA C22-2 n°14
Overload protection	Tripping class conforming to UL 508, IEC/EN 60947-6-2		10	10	20
	Frequency limits of the operational current	**Hz**	40…60	40…60	40…60
	Temperature compensation	**°C**	-25…+70	-25…+55	-25…+70
	Protection against phase imbalance		Yes	–	Yes
Short-circuit protection	Tripping threshold		13 x Ir max.	13 x Ir max.	13 x Ir max.
	Tripping tolerance		±20 %	±20 %	±20 %

Characteristics of multifunction control units LUCM

Protection	Motor type		Parameters can be set: single-phase or 3-phase
	Conforming to standard		IEC/EN 60947-6-2
Overload protection	Tripping class conforming to IEC/EN 60947-6-2		5, 10, 15, 20, 25, 30 (selectable)
	Frequency limits of the operational current	**Hz**	50…60
	Temperature compensation	**°C**	-25…+55
Communication interface for terminal on enclosure door	Physical interface		RS 485 multi-drop
	Connections		RJ45 on front panel
	Protocol		Modbus RTU
	Maximum transmission speed	**bit/s**	19 200 (self-configuration up to this value)
	Maximum return time	**ms**	200
Display	Type		LCD, 2 lines of 12 characters
	Language version		Multilanguage (English, French, German, Italian, Spanish)
	Precision		±5 %
	Resolution		1 % of Ir
Auxiliary supply	External type	**V**	⎓ 24, with maximum ripple of ±10 %.
	Heat dissipation	**W**	0.8

Configuration table for protection devices and alarms on multifunction control units LUCM

	Tripping	**Alarm**	**Adjustment of tripping threshold**		**Adjustment of time before tripping**		**Adjustment of alarm threshold**	
	Factory setting	**Factory setting**	**Range**	**Default value**	**Range**	**Default value**	**Range**	**Default value**
Overcurrent	Activated (1)	–	3…17 Ir	14.2	–	–	–	–
Overload	Activated (1)	Activated	0.5…32 A (2)	Ir min	Class: 5…30	5	10…100 % of the thermal state	85 %
Earth fault	Activated	Activated	0.2…5 Ir min	0.3 Ir min	0.1…1.2 s	0.1 s	0.2…5 Ir min	0.3 Ir min
Phase imbalance	Activated	Activated	10…30 %	10 %	0.2…20 s	5 s	10…30 %	10 %
Torque limitation	Deactivated	Deactivated	1…8 Ir	2 Ir	1…30 s	5 s	1…8 Ir	2 Ir
No-load running	Deactivated	Deactivated	0.3…1 Ir	0.5 Ir	1…200 s	10 s	0.3…1 Ir	0.5 Ir
Long starting time	Deactivated	Deactivated	1…8 Ir	Ir	1…200 s	10 s	1…8 Ir	Ir

Configuration of additional functions on multifunction control units LUCM

	Factory setting	**Setting range**
Reset	Manual	Manual, automatic or remote
Time before reset	120 s	1…1000 s
Type of load	3-phase motor	3-phase motor, single-phase motor
	Self-cooled	Self-cooled, force cooled
Language	English	English, French, German, Italian, Spanish
Display	Average current	Average current, thermal state of motor, current in phase 1 / 2 / 3, earth leakage current, phase imbalance, cause of last 5 faults

(1) This function cannot be deactivated.
(2) The setting range depends on the rating of the control unit used.

References: pages A4/11 to A4/14
Curves: pages A4/56 to A4/61
Dimensions: pages A4/62 and A4/63
Schemes: pages A4/64 to A4/76

Characteristics of magnetic control unit LUCL

Protection	Motor type		3-phase
	Conforming to standard		When used in conjunction with an LUB12, LUB32 or LUB38 power base, magnetic control unit LUCL conforms to standard IEC 60947-6-2.
Short-circuit protection	Tripping threshold		14.2 x In (max. setting current)
	Tripping tolerance		±20 %
Environment			
Product certifications			CE
Conforming to standards			When used in conjunction an LUB power base, control unit LUCL conforms to standard 60947-6-2.
Rated insulation voltage (Ui)	Conforming to IEC/EN 60947-1, overvoltage category III, degree of pollution: 3	**V**	690
Rated impulse withstand voltage (Uimp)	Conforming to IEC/EN 60947-6-2	**kV**	6
Safety separation of circuits SELV	Conforming to IEC/EN 60947-1 appendix N	**V**	Between the control or auxiliary circuit and the main circuit: 400
			Between the control and auxiliary circuits: 40
Degree of protection Conforming to IEC/EN 60947-1 (protection against direct finger contact)	Front panel outside connection zone		IP 40
	Front panel and wired terminals		IP 20
	Other faces		IP 20
Protective treatment	Conforming to IEC/EN 60068		"TH"
	Conforming to/EN 60068-2-30	**Cycles**	12
	Conforming to IEC/EN 60068-2-11	**h**	48
Ambient air temperature around the device	Storage	**°C**	- 40…+ 85
	Operation	**°C**	Power bases and standard and advanced control units: - 25… + 70. (At temperatures above 60°C and up to 70°C, for Ie = 32 A, leave a minimum gap of 9 mm between products).
			Power bases and multifunction control units: - 25…+ 60. (At temperatures above 45 °C, leave a minimum gap of 9 mm between products. At temperatures above 55 °C up to 60 °C, leave a gap of 20 mm between products.)
Maximum operating altitude		**m**	2000
Operating positions	In relation to normal vertical mounting plane		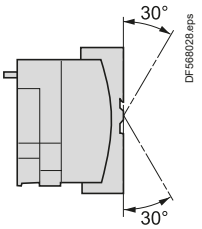 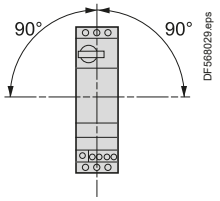
Flame resistance	Conforming to UL 94		V2
	Conforming to IEC/EN 60695-2-12	**°C**	960 (parts supporting live components)
		°C	650
Environmental restrictions			Cadmium and silicone-free, recyclable
Shock resistance 1/2 sine wave = 11 ms	Conforming to IEC/EN60068-2-27 (1)		Power poles open: 10 gn
			Power poles closed: 15 gn
Vibration resistance 5…300 Hz	Conforming to IEC/EN 60068-2-6 (1)		Power poles open: 2 gn
			Power poles closed: 4 gn (2)
Resistance to electrostatic discharge	Conforming to IEC/EN 61000-4-2	**kV**	In open air: 8 - Level 3
		kV	On contact: 8 - Level 4
Immunity to radiated high-frequency disturbance	Conforming to IEC/EN 61000-4-3	**V/m**	10 - Level 3
Immunity to fast transient currents	Conforming to IEC/EN 61000-4-4	**kV**	All circuits except for serial link: 4 - Level 4
		kV	Serial link: 2 - Level 3
Immunity to dissipated shock waves	Conforming to IEC/EN 60947-6-2		**Common mode** / **Serial mode**
	Uc ∿ 24…240 V, Uc ⎓ 48…220 V	**kV**	2 / 1
	Uc = 24 V ⎓		Not applicable
Immunity to conducted high-frequency disturbance	Conforming to IEC/EN 61000-4-6	**V**	10

(1) Without modifying the contact states, in the most unfavourable direction.
(2) 2 gn with Advantys STB or CANopen communication modules.

References: page A4/34
Schemes: pages A4/65

Characteristics

Power circuit connection characteristics of LUCL

Power base and control unit type			LUB12 + LUCL	LUB32 + LUCL	LUB38 + LUCL
Connection to Ø4 mm screw clamp terminals					
Flexible cable without cable end	1 conductor	mm²	2.5…10	2.5…10	
	2 conductors	mm²	1.5…6	1.5…6	
Flexible cable with cable end	1 conductor	mm²	1…6	1…6	
	2 conductors	mm²	1…6	1…6	
Flexible cable without cable end	1 conductor	mm²	1…10	1…10	
	2 conductors	mm²	1…6	1…6	
Screwdriver			Philips n° 2 or flat screwdriver: Ø6 mm		
Tightening torque		N.m	1.9…2.5	1.9…2.5	

Control circuit connection characteristics of LUCL

Connection to Ø3 mm screw clamp terminals					
Flexible cable without cable end	1 conductor	mm²	0.75…1.5	0.75…1.5	
	2 conductors	mm²	0.75…1.5	0.75…1.5	
Flexible cable with cable end	1 conductor	mm²	0.34…1.5	0.34…1.5	
	2 conductors	mm²	0.34…1.5	0.34…1.5	
Flexible cable without cable end	1 conductor	mm²	0.75…1.5	0.75…1.5	
	2 conductors	mm²	0.75…1.5	0.75…1.5	
Screwdriver			Philips n° 2 or flat screwdriver: Ø5 mm		
Tightening torque		N.m	0.8…1.2	0.8…1.2	

Control circuit characteristics of LUCL

Rated control circuit voltage	∿ 50/60 Hz	V	24…240	24…240	
	⎓	V	24…220	24…220	
Voltage limits	⎓ 24 V (1)	V	20…27	20…27	
Operation	∿ 24 V	V	20…26.5	20…26.5	
	∿ or ⎓ 48…72 V	V	∿ 38.5…72. ⎓ 38.5…93	∿ 38.5…72. ⎓ 38.5…93	
	∿ 110…240 V	V	∿ 88…264	∿ 88…264	
	⎓ 110…240 V	V	⎓ 88…242	⎓ 88…242	
Drop-out	⎓ 24 V	V	14.5	14.5	
	∿ 24 V	V	14.5	14.5	
	∿ or ⎓ 48…72 V	V	29	29	
	∿ 110…240 V, ⎓ 110…220 V	V	55	55	
Typical consumption	⎓ 24 V	mA	130	220	
I max while closing	∿ 24 V	mA	140	220	
	∿ or ⎓ 48…72 V	mA	280	280	
	∿ 110…240 V, ⎓ 110…220 V	mA	280	280	
I rms sealed	⎓ 24 V	mA	60	80	
	∿ 24 V	mA	70	90	
	∿ or ⎓ 48…72 V	mA	35	45	
	∿ 110…240 V, ⎓ 110…220 V	mA	35	25	
Heat dissipation		W	2	3	
Operating time	Closing	ms	24 V: 70; 48 V: 60; ≥ 72 V: 50	24 V: 70; 48 V: 60; ≥ 72 V: 50	
	Opening	ms	35	35	
Resistance to micro-breaks		ms	3	3	
Resistance to voltage dips	IEC/EN 61000-4-11		At least 70 % of Uc for 500 ms		
Mechanical durability	In millions of operating cycles		15	15	
Maximum operating rate	In operating cycles per hour		3600	3600	

Main pole characteristics of LUCL

Number of poles			3	3	
Isolation conforming to IEC/EN 60947-1	Possible		Yes	Yes	
	Padlocking		1 padlock with Ø6.9 mm shank	1 padlock with Ø6.9 mm shank	
Rated thermal current		A	12	32	(38 A for LUB38)
Rated operational current (Ue ≤ 440 V)	Conforming to IEC/EN 60947-6-2	Category AC-41	θ ≤ 70 °C: 12 A	θ ≤ 70 °C: 32 A	(38 A for LUB38)
		Category AC-43	θ ≤ 70 °C: 12 A	θ ≤ 70 °C: 32 A	38
Rated operational voltage		V	690 (3)	690 (3)	690
Frequency limits	Of the operating current	Hz	40…60	40…60	40...60
Power dissipated in the power circuits	Operational current	A	3 6 9 12 18 25 32 38		
	Power dissipated in all three poles	W	0.1 0.3 0.6 1.1 2.4 4.6 7.5 10.5		
Rated breaking capacity on short-circuit		V	230 440 500 690		
		kA	50 50 10 4		
Total breaking time		ms	2 2 2		
Thermal limit	With Isc max on 440 V	kA²s	90	120	

(1) d.c. voltage with maximum ripple of ± 10 %. *(2) No consumption sealed.* *(3) For 690 V, use phase barrier **LU9SP0**.*

References: page A4/34
Schemes: page A4/65

Characteristics

Characteristics of limiter-disconnector LUALB1

Rated insulation voltage (Ui) conforming to standard IEC/EN 60947-1		**V**	690
Conventional thermal current (Ith) conforming to standard IEC/EN 60947-1		**A**	32
Operating threshold	I rms	**kA**	50
Breaking capacity		**V**	440 690
		kA	130 70
Mounting			Directly on the upstream terminals of the starter-controller
Cabling			
Solid cable	1 conductor	**mm²**	1.5…10
	2 conductors	**mm²**	1.5...6
Flexible cable without cable end	1 conductor	**mm²**	1…10
	2 conductors	**mm²**	1…6
Flexible cable with cable end	1 conductor	**mm²**	1...6
	2 conductors	**mm²**	1...6
Screwdriver			Phillips n°2 or flat screwdriver Ø6 mm
Tightening torque		**N.m**	1.9…2.5

Characteristics of current limiter LA9LB920

Rated insulation voltage (Ui) conforming to standard IEC/EN 60947-1		**V**	690
Conventional thermal current (Ith) conforming to standard IEC/EN 60947-1		**A**	63
Operating threshold	I rms	**A**	1000
Breaking capacity		**V**	440 690
		kA	100 35
Mounting			Separate
Cabling			
Solid cable	1 conductor	**mm²**	1.5…25
	2 conductors	**mm²**	1.5...10
Flexible cable without cable end	1 conductor	**mm²**	1.5…25
	2 conductors	**mm²**	2.5…10
Flexible cable with cable end	1 conductor	**mm²**	1.5…16
	2 conductors	**mm²**	1.5…4
Screwdriver			Phillips n°2 or flat screwdriver Ø6 mm
Tightening torque		**N.m**	2.2

Characteristics of thermal overload alarm function modules LUFW10

Activation threshold			Fixed at 88 % of the thermal tripping state
Hysteresis between activation and switching off			5 %
Display			By LED on front panel
Supply			Powered by the control unit
Discrete output characteristics	Type		N/O contact
	AC-15		230 V max; 400 VA 100 000 operating cycles
	DC-13		24 V; 50 W 100 000 operating cycles
Conventional thermal current (Ith)	For ambient temperature θ < 70 °C	**A**	2
Short-circuit protection	Conforming to IEC/EN 60947-5-1	**A**	gG fuse: 2

Characteristics of thermal overload fault signalling and reset modules

Module type			**LUFDH11**	**LUFDA01**	**LUFDA10**
Fault signalling			By LED on front panel		
External power supply		**V**	∿/⎓ 24… 240		
Module consumption		**mA**	7 at ⎓ 24 1.1 at ∿ 240		
Discrete outputs	Type		1 N/C+ 1 N/O	1 N/C	1 N/O
	AC-15		230 V max; 400 VA 100 000 operating cycles		
	DC-13		24 V; 50 W 100 000 operating cycles		
Conventional thermal current (Ith)	For ambient temperature θ < 70 °C	**A**	2		
Short-circuit protection	Conforming to IEC/EN 60947-5-1	**A**	gG fuse: 2		
Reset input	Conductor c.s.a.	**mm²**	0.2 min		
	Length	**m**	500 (R = 50 Ω , L = 52.8 mH, Cp = 93 pF)		

References:
pages A4/13, A4/31

Dimensions:
page A4/63

Life Is On Schneider Electric

Characteristics

Characteristics of motor load indication function module LUFV2

Analogue output			4 - 20 mA
Signal delivered			Value of I average/Ir ratio within the range of 0 to 2 for LUCB and LUCD
			Value of I average/Ir ratio within the range of 0 to 3 for LUCC
Load impedance	Minimum	kΩ	–
	Maximum	Ω	500
	Typical	Ω	100
Signal characteristics with advanced control unit	Precision		±6 %
Signal characteristics with multifunction control unit	Precision		±10 %
	Resolution		1 % of Ir
Supply			External ⎓ 24 V

Characteristics of AS-Interface communication modules ASILUFC5 and ASILUFC51

Module type			**ASILUF C5**	**ASILUF C51**
Product certification			AS-Interface V2.1 n° 52901	AS-Interface V2.1 n° 52303
AS-Interface profile			7.D.F.0	7.A.7.E
Ambient air temperature		**°C**	Operation -25…+70	
Cycle time		**ms**	5	10
Addressing			31 slaves	62 slaves
AS-Interface supply		**V**	29.5...31.5	
Current consumption	On the AS-Interface bus	**mA**	Normal operation: 25	
		mA	Fault condition: 30	
	On 24 V supply for the outputs	**mA**	200	
Auxiliary supply		**V**	⎓ 24 ±30 %	
Number of outputs			2 dedicated to starter-controller coil operation	
Switching capacity of the solid state outputs			0.5 A/24 V (outputs protected against short-circuits)	
Indication/diagnostics			By 2 LEDs on front panel	

Characteristics of Modbus communication module LULC033

Physical interface				RS 485 multi-drop
Connections				RJ45 on front panel
Protocol				Modbus RTU
Maximum transmission speed			**bit/s**	19 200 (self-configuration up to this value)
Maximum return time			**ms**	30
Addressing				By switches: from 0...31
Ambient air temperature			**°C**	Operation -25…+55
Discrete inputs		Number		2 (to be assigned according to the configuration)
		Supply	**V**	⎓ 24
		Input current	**mA**	7
	Nominal input values	Voltage	**V**	⎓ 24 (positive logic)
		Current	**mA**	7
	Response time	Change to state 1	**ms**	10 (±30 %)
		Change to state 0	**ms**	10 (±30 %)
	Input type			Resistive
Solid state outputs		Number		3, of which 2 dedicated to starter-controller coil operation
		Supply	**V**	⎓ 24
		Max. current	**mA**	500
	Protection	gI fuse	**A**	1
	Switching capacity			0.5 A/24 V
Indication/diagnostics				By 3 LEDs on front panel

References:
pages A4/13, A4/24, A4/26

Schemes:
pages A4/66, A4/74, A4/75

Characteristics

Characteristics of CANopen, Profibus DP and DeviceNet communication modules

Communication module				Profibus DP LULC07	CANopen LULC08	DeviceNet LULC09
Services	Conformity class			NA	S 20 (Schneider Electric)	NA
	Standard			Profibus DP	CIADS-301 V4.02 DR 303-2	IEC 62026-1, overvoltage category III, degree of pollution: 3
	Profile			LVSG V1.0 MS (Motor Starter) and MMS (Motor Management Starter)	–	ODVA (Open DeviceNet Vendor Association) MS (Motor Starter)
	Protocol			Profibus DP	CAN 2.0A (2B passive)	CAN 2.0A (2B passive)
	Address			1…125	0…127 (by switches)	0…63
Structure	Physical interface			9-way SUB-D male	9-way SUB-D female	"Open Style" connector
	Binary rate			9600 Kbits/s…12 Mbits/s	10, 20, 50, 125, 250, 500 and 1000 Kbits/s (by switches)	125…500 kbaud
	Cables			2 shielded twisted pairs		
Supply for the discrete outputs and control	⎓ 24 V		**V**	20…28		
	Current consumption		**A**	1.5 (max)		
	Protection by gI fuse		**A**	2		
Ambient air temperature			**°C**	Operation -25…+55		
Logic inputs	Number			2 (to be assigned according to the configuration)		
	Supply		**V**	⎓ 24		
	Input current		**mA**	7		
	Nominal input values	Voltage	**V**	⎓ 24 (positive logic)		
		Current	**mA**	7		
	Response time	Change to state 1	**ms**	10 (±30 %)		
		Change to state 0	**ms**	10 (±30 %)		
	Input type			Resistive		
Discrete outputs	Number			3, of which 2 dedicated to starter-controller coil operation		
	Max. current		**mA**	500		
	Short-circuit protection			Yes		
	Switching capacity			0.5 A / ⎓ 24 V		
Indication/diagnostics				By 3 LEDs on front panel		

Characteristics of Advantys STB communication module LULC15

Physical interface				CAN
Connections				Fire Wire
Protocol				CAN 2.0 and CAN 2.B (passive mode)
Transmission speed			**kbit/s**	800
Addressing				Self-addressing
Supply for the discrete outputs and control	⎓ 24 V		**V**	20…28
	Current consumption		**A**	1.5 (max)
	Protection by gI fuse		**A**	2
Ambient air temperature			**°C**	Operation -25…+55
Discrete inputs	Number			2 (to be assigned according to configuration)
	Supply		**V**	⎓ 24
	Input current		**mA**	7
	Nominal input values	Voltage	**V**	⎓ 24 (positive logic)
		Current	**mA**	7
	Response time	Change to state 1	**ms**	10 (± 30 %)
		Change to state 0	**ms**	10 (± 30 %)
	Input type			Resistive
Discrete outputs	Number			3, of which 2 dedicated to starter-controller coil operation
	Max. current		**mA**	500
	Short-circuit protection			Yes
	Switching capacity			0.5 A / ⎓ 24 V
Indication/diagnostics				By 3 LEDs on front panel

References:
pages A4/25, A4/27, A4/28, A4/29
Schemes:
pages A4/68 and A4/69

Characteristics

Connection characteristics

Module type				LUFW10, LUFDH11, LUFDA01 and LUFDA10	LUFV2	ASILUFC5 and ASILUFC51	
						Inputs and 24 V auxiliary supply	Outputs
Connectors		Pitch		5.08	3.81	5.08	3.81
Flexible cable without cable end		1 conductor	mm²	0.2…1.5	0.14…1	0.2…1.5	0.14…1
		2 identical conductors	mm²	0.2…1	0.14…0.75	0.2…1	0.14…0.75
Flexible cable with cable end	Without insulated ferrule	1 conductor	mm²	0.25…1.5	0.25…1	0.25…1.5	0.25…1
		2 identical conductors	mm²	0.25…1	0.25…0.34	0.25…1	0.25…0.34
	With insulated ferrule	1 conductor	mm²	0.25…1.5	0.25…0.5	0.25…1.5	0.25…0.5
		2 identical conductors (Use a double cable end)	mm²	0.5…1	0.5	0.5…1	0.5
Solid cable without cable end		1 conductor	mm²	0.2…1.5	0.14…1	0.2…1.5	0.14…1
		2 identical conductors	mm²	0.2…1	0.14…0.5	0.2…1	0.14…0.5
Conductor size		1 conductor		AWG24… AWG16	AWG26… AWG16	AWG24… AWG16	AWG26… AWG16
Tightening torque			N.m	0.5…0.6	0.20…0.25	0.5…0.6	0.20…0.25
Flat screwdriver			mm	3.5	2.5	3.5	2.5

Module type				LULC033, LULC08 and LULC15	LUFC00	LULC09	
						Inputs and 24 V auxiliary supply	Connection on the bus
Connectors		Pitch		3.81	3.81	3.81	5 (Open Style) DeviceNet
Flexible cable without cable end		1 conductor	mm²	0.14…1	0.14…1	0.14…1	0.2…2.5
		2 identical conductors	mm²	0.14…0.75	0.14…0.75	0.14…0.75	0.5…1.5
Flexible cable with cable end	Without insulated ferrule	1 conductor	mm²	0.25…1	0.25…1	0.25…1	0.25…2.5
		2 identical conductors	mm²	0.25…0.34	0.25…0.34	0.25…0.34	0.25…1
	With insulated ferrule	1 conductor	mm²	0.25…0.5	0.25…0.5	0.25…0.5	0.25…2.5
		2 identical conductors (Use a double cable end)	mm²	0.5	0.5	0.75	0.5…1.5
Solid cable without cable end		1 conductor	mm²	0.14…1	0.14…1	0.14…1	0.2…2.5
		2 identical conductors	mm²	0.14…0.5	0.14…0.5	0.14…0.5	0.14…0.5
Conductor size		1 conductor		AWG26… AWG16	AWG26… AWG16	AWG26… AWG16	AWG24… AWG16
Tightening torque			N.m	0.20…0.25	0.20…0.25	0.20…0.25	0.5…0.6
Flat screwdriver			mm	2.5	2.5	2.5	3.5

References:
pages A4/13, A4/24 to A4/29

Schemes:
pages A4/66, A4/68 to A4/75

Characteristics

Knob positions - Poles and Signaling contact states

Ultra operating status		Position of rotary knob	Indication on front panel	N/O pole contact	N/C pole contact	N/O contact any fault	N/C ontact any fault	⏱ N/O contact product ready	N/C contact Rotary knob on OFF position
References of add-on contact blocks and auxiliary contact modules Terminal referencing		–	–	–	**LUFN11** 31-32	**LUA1C20** 97-98	**LUA1C11** 95-96	**LUA1C20** 17-18	–
	or	–	–	–	**LUFN02** 31-32 41-42	–	–	–	**LUA8E20** 57/58 67/68
	or	–	–	**LUFN20** 33-34 43-44	**LU9BN11** 21-22	–	–	**LUA1C11** 17-18	–
	or	–	–	**LUFN11** 43-44	–	–	–	–	–
	or	–	–	**LU9BN11** 13-14	–	–	–	–	–
Off		OFF	**0**						
Ready to operate			**0**						
Start			**1**						
Tripped on short-circuit		TRIP	**I>>**						
Tripped on thermal overload	Manual reset mode	TRIP	**0**						
	Automatic reset on thermal overload fault mode		**0**						
	Remote reset mode		**0**						

N/O contact *in closed position.*

N/C contact *in open position.*

Ultra motor starters
Ref.

References:
pages A4/10 and A4/13
Schemes:
pages A4/73 and A4/76

Characteristics

Data profile under AS-Interface						
Control unit present in the product				Standard LUCA	Advanced LUCB, CC, CD	Multifunction LUCM
Status		D0	Ready (available)	■	■	■
		D1	Poles closed (running)	■	■	■
Commands		D0	Start - forward running	■	■	■
		D1	Start - reverse running	■	■	■

Main registers accessible with Modbus, CANopen, Advantys STB, Profibus DP and DeviceNet communication modules.						
For other registers and for further information, please consult the User's Manual *Communication variables* on the website www.schneider-electric.com						
Control unit present in the product				Standard	Advanced	Multifunction
Marking	Register 0…Register 99	Words…Bits	Commercial reference, serial number, software version	■	■	■
Log	Register 100…Register 450	Words…Bits	Fault log, Operating log, Log of last 5 trips	■	■	■
Status	Register 451…Register 464	Words…Bits	Alarm signalling (bits), Fault signalling (bits)	■	■	■
Values	Register 465…Register 473	Words	Irms phase 1, phase 2, phase 3. Motor load, thermal status Earth leakage current. Phase imbalance and phase failure	■	■	■
	Register 474…Register 599	Words…Bits	Reserved	■	■	■
Configuration	Register 600…Register 699	Words…Bits	Protection and alarm thresholds, fallback mode and reset mode	■	■	■
Commands	Register 700…Register 714	Words…Bits	Commands	■	■	■

Status and values	Register 452	Bit 0	Short-circuit fault	■	■	■
		Bit 1	Overcurrent fault	■	■	■
		Bit 2	Thermal overload fault	■	■	■
	Register 455	Bit 0	Ready (available)	■	■	■
		Bit 1	Poles closed	■	■	■
		Bit 2	Fault	■	■	■
		Bit 3	Alarms	■	■	■
		Bit 4	Tripped ("TRIP" position)	■	■	■
		Bit 5	Fault acknowledgement allowed	■	■	■
		Bit 6	Reserved	■	■	■
		Bit 7	Motor running	■	■	■
		Bit 8	Motor current % (bit 0)	■	■	■
		Bit 9	Motor current % (bit 1)	■	■	■
		Bit 10	Motor current % (bit 2)	■	■	■
		Bit 11	Motor current % (bit 3)	■	■	■
		Bit 12	Motor current % (bit 4)	■	■	■
		Bit 13	Motor current % (bit 5)	■	■	■
		Bit 14	Reserved	■	■	■
		Bit 15	Motor starting	■	■	■
	Register 461	Bit 3	Thermal overload alarm	■	■	■
	Register 465	Word	Thermal status value	■	■	■
	Register 466	Word	Motor load value (Im/Ir)	■	■	■

Configuration	Register 602	Bit 0	Manual reset on thermal overload fault	■	■	■
		Bit 1	Remote reset on thermal overload fault	■	■	■
		Bit 2	Automatic reset on thermal overload fault	■	■	■
	Register 682	Value 0	Fallback mode validation	■	■	■
		Value 1	Outputs OA1 and OA3 unchanged	■	■	■
		Value 2	Outputs OA1 and OA3 forced to 0	■	■	■
		Value 3	Outputs OA1 and OA3 unchanged, signalling existence of communication failure	■	■	■
		Value 4	Outputs OA1 forced to 1 and OA3 unchanged	■	■	■
		Value 5	Outputs OA3 forced to 1 and OA1 unchanged	■	■	■

Commands	Register 700	Bit 0	LO1 output command	■	■	■
	Register 704	Bit 0	OA1 output command	■	■	■
		Bit 1	OA3 output command	■	■	■
		Bit 2	Reserved	■	■	■
		Bit 3	Fault acknowledgement	■	■	■
		Bit 4	Reserved	■	■	■
		Bit 5	Trip test	■	■	■
		Bit 6…15	Reserved	■	■	■

■ *Data accessible*

References:
pages A4/24 to A4/29

Schemes:
pages A4/66 and A4/67

Curves

Tripping curves for control units LUCA, LUCB, LUCD

Average operating times at 20 °C according to multiples of the setting current, tolerance : ± 20 %.

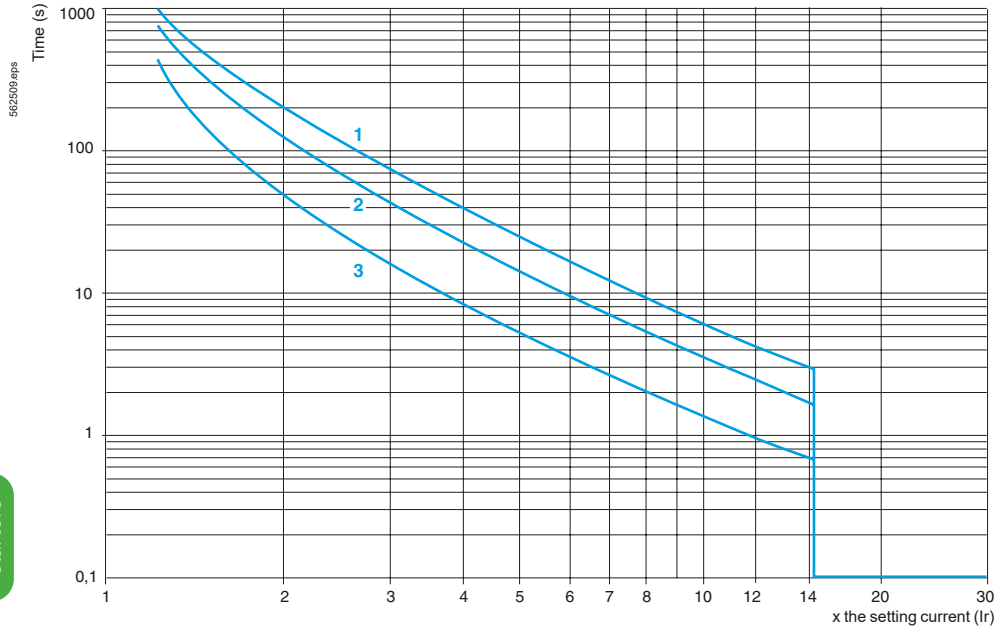

1 LUCD, 3 poles from cold state, class 20.
2 LUCA, LUCB, 3 poles from cold state, class 10.
3 LUCA, LUCB, LUCD, 3 poles from hot state.

Tripping curves for control units LUCC

Average operating times at 20 °C according to multiples of the setting current, tolerance : ± 20 %.

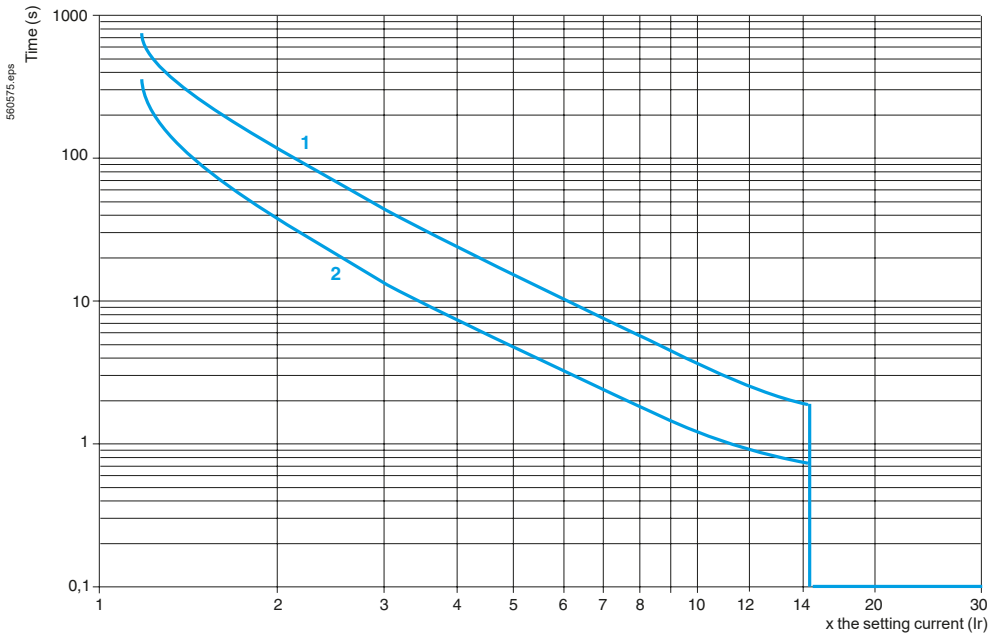

1 LUCC, single-phase, cold state.
2 LUCC, single-phase, hot state.

References:
pages A4/11 and A4/12
Characteristics:
page A4/47
Schemes:
page A4/65

Curves

Tripping curves for control units LUCM

Cold state curves

Average operating times at 20 °C according to multiples of the setting current, tolerance : ± 20 %.

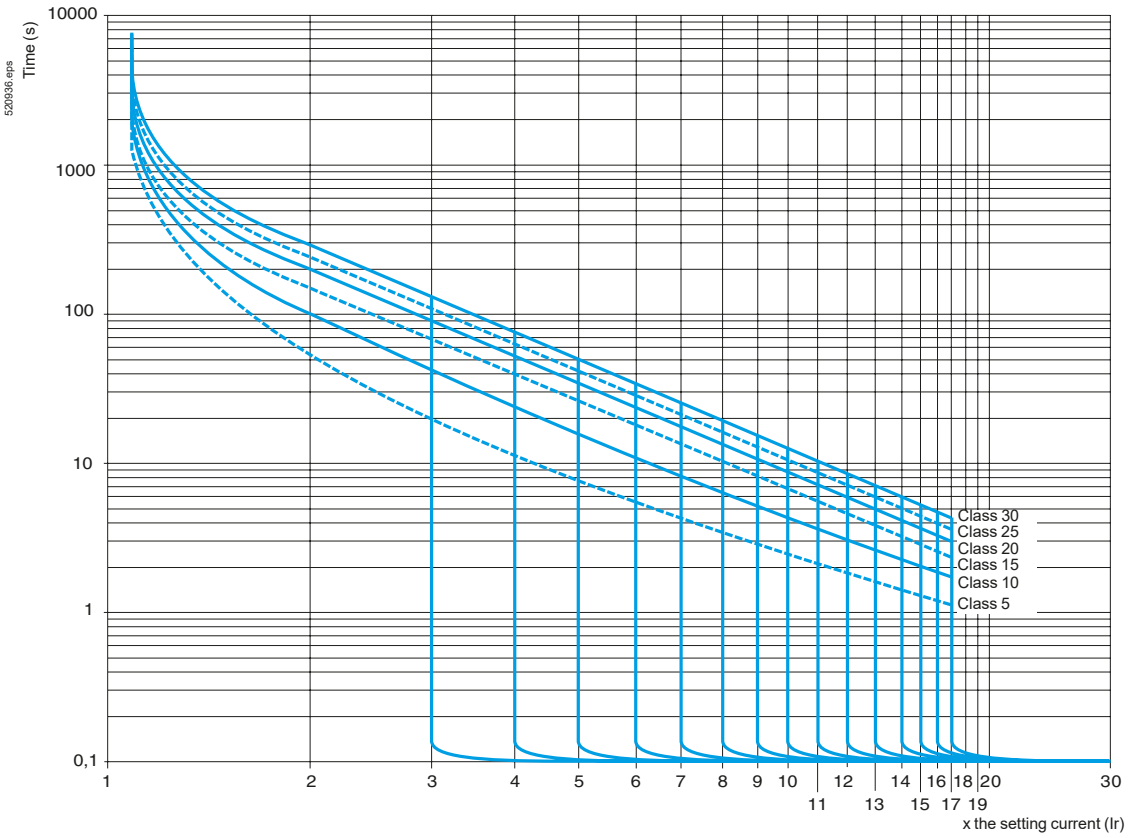

Ultra motor starters
Ref.

References:
page A4/12
Characteristics:
page A4/47
Schemes:
page A4/65

Curves

Tripping curves for control units LUCM

Hot state curves

Average operating times at 20 °C according to multiples of the setting current, tolerance : ± 20 %

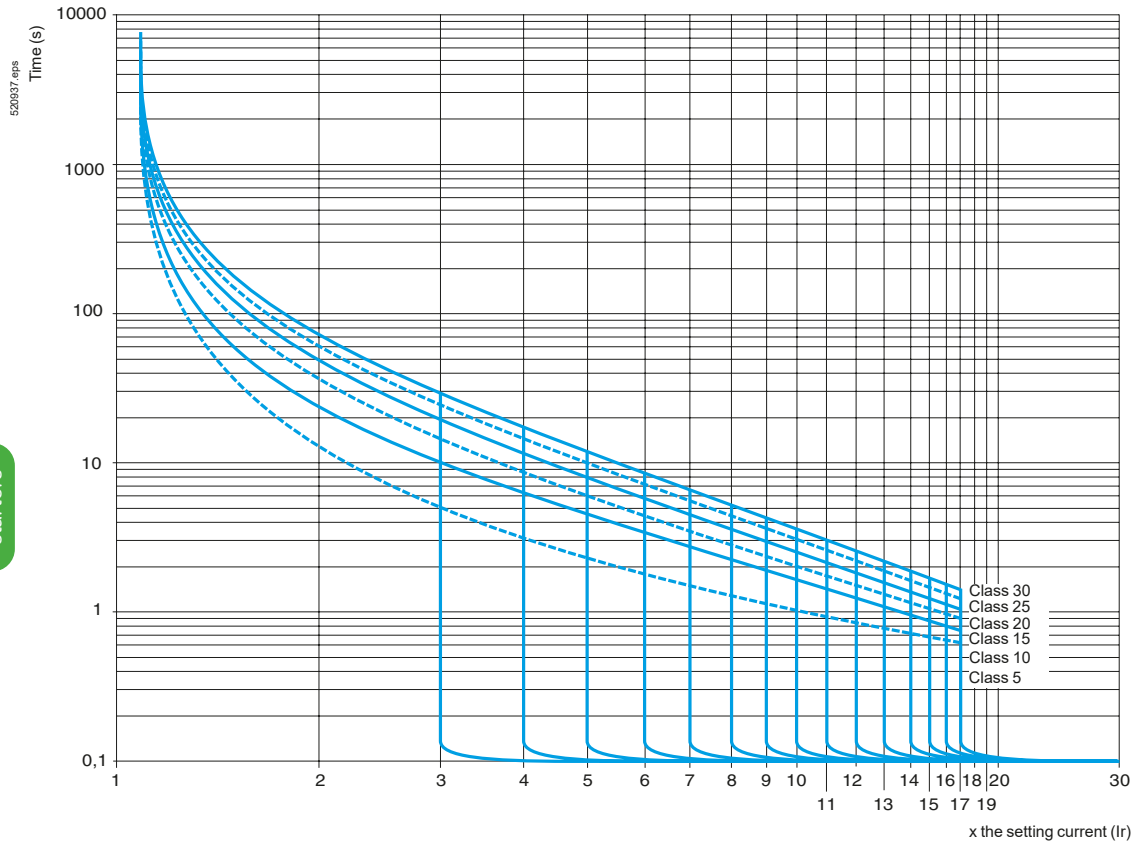

Curves

Current limitation on short-circuit

U_e = 460 V

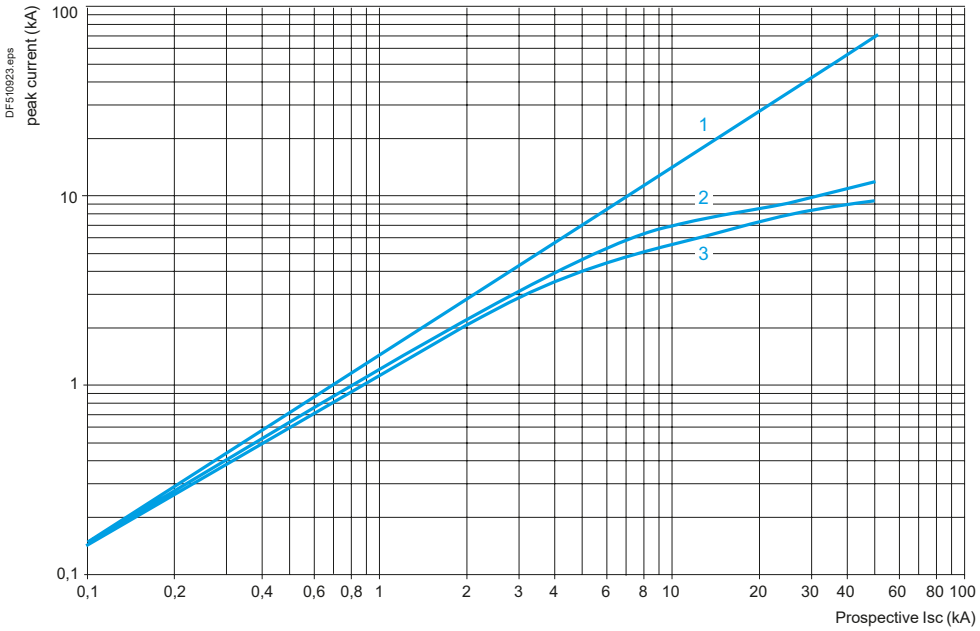

1 Maximum peak current
2 32 A, 38 A power base
3 12 A power base

Thermal limit on short-circuit

U_e = 460 V

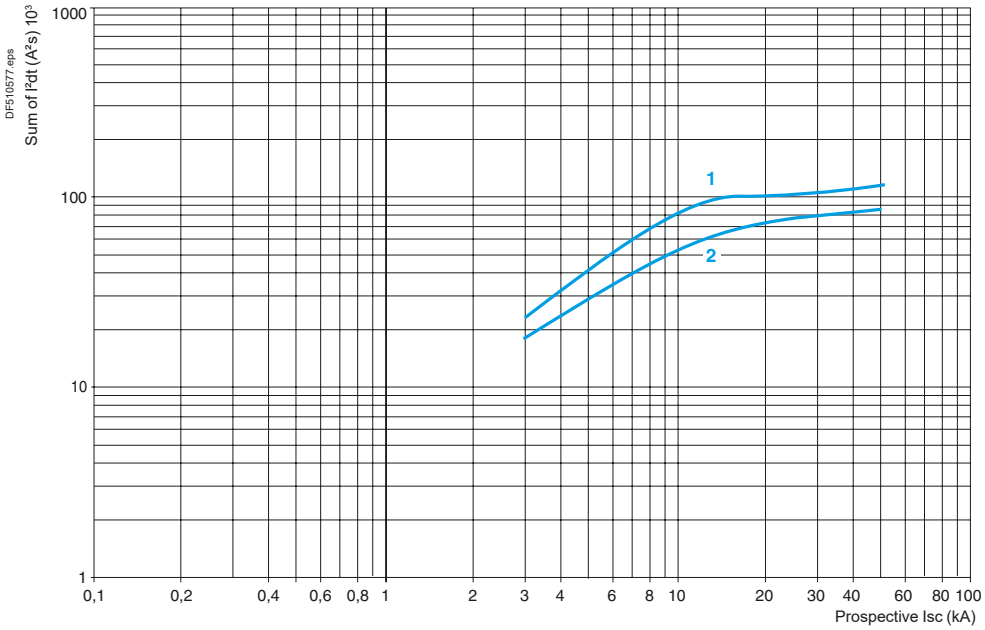

1 32 A, 38 A power base
2 12 A power base

References:
page A4/10

Characteristics:
pages A4/44, A4/46 to A4/54

Schemes:
pages A4/64 to A4/76

Curves

Use in category AC-41

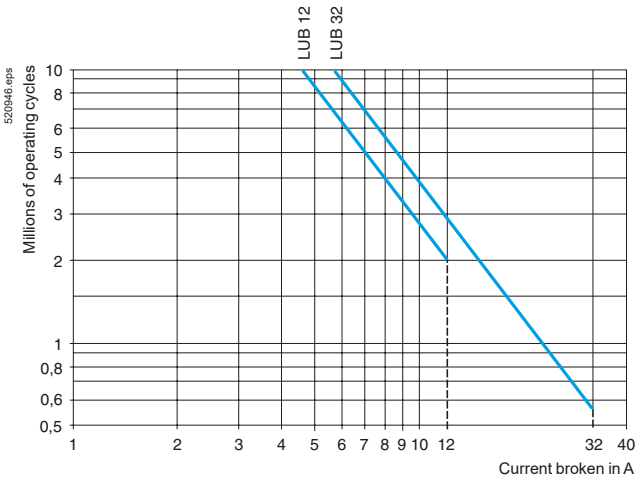

Use in category AC-43

Ue ⩽ 440 V

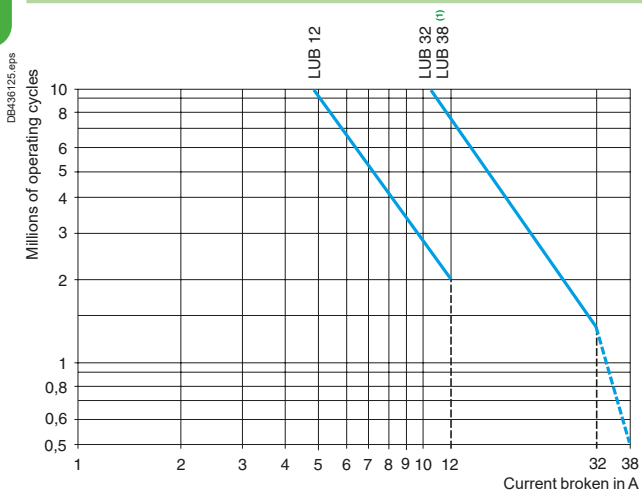

Ue = 690 V

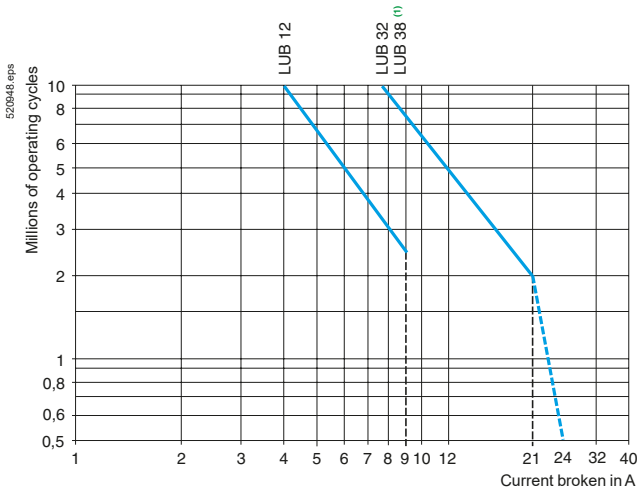

(1) Plain curve: **LUB32** + **LUB38**, doted curve: **LUB38** only.

References:
page A4/10

Characteristics:
pages A4/44, A4/46 to A4/54

Dimensions:
pages A4/62 and A4/63

Schemes:
pages A4/64 to A4/76

Life Is On Schneider Electric

Curves

Use in category AC-44

Ue ≤ 440 V

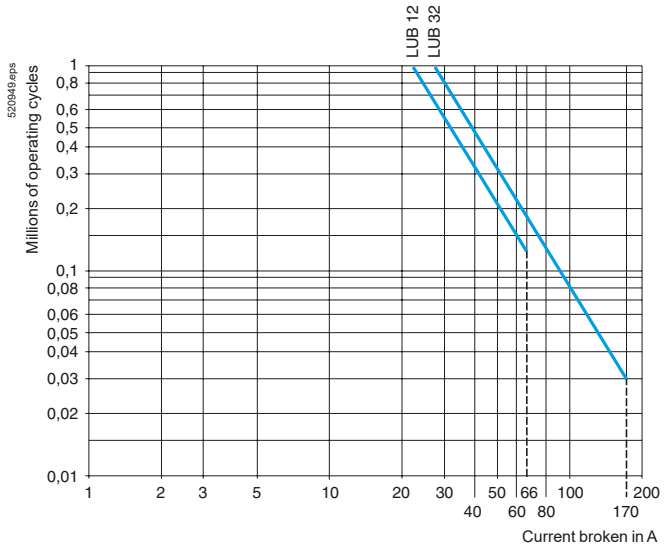

Ue = 690 V

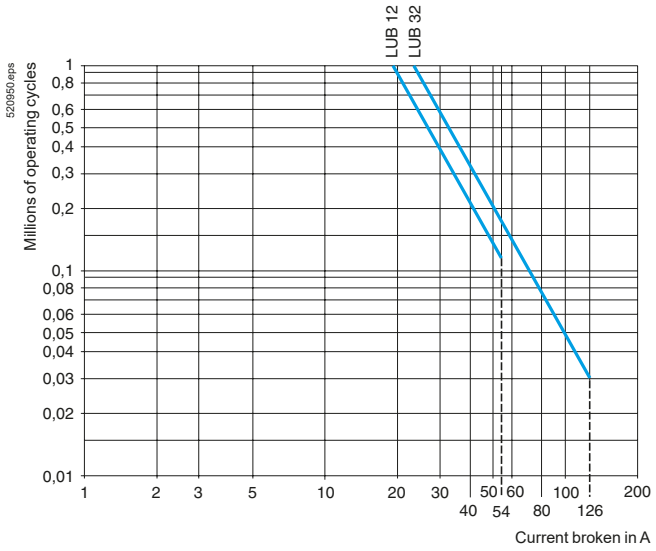

References:
page A4/10
Characteristics:
pages A4/44, A4/46 to A4/54
Dimensions:
pages A4/62 and A4/63
Schemes:
pages A4/64 to A4/76

Dimensions

Starter-controllers

LUB: non-reversing

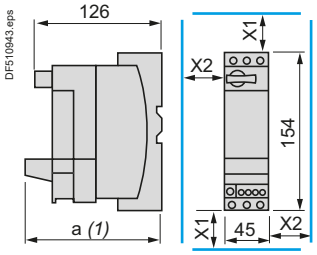

Rail mounting

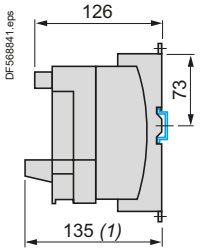

Screw fixing

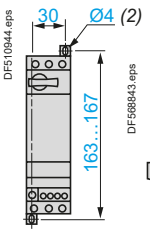

	a
With Modbus module	135
With Advantys STB, CANopen, Profibus DP or DeviceNet modules	147

Minimum electrical clearance:
X1 = 50 mm for Ue = 440 V and 70 mm for Ue = 500 and 690 V, X2 = 0

LU2B: reversing

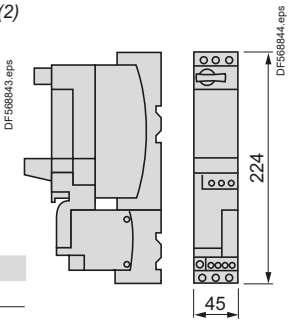

Rail mounting

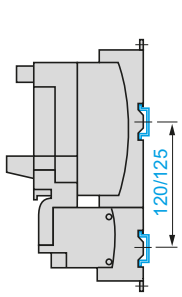

Screw fixing

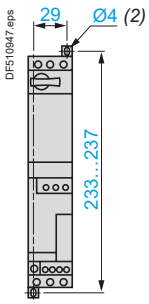

Reverser block for mounting separately from power base

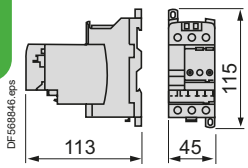

Rail mounting

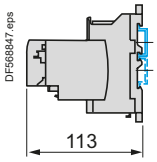

Screw fixing

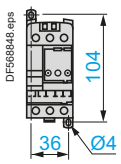

Sets of busbars and plug-in power sockets

GV2G445 and GV2G454

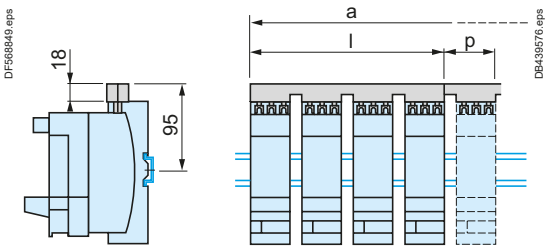

	l	P
GV2G445 (2 x 45)	179	45
GV2G454 (2 x 54)	206	54

	a			
Number of tap-offs	5	6	7	8
GV2G445 (2 x 45)	224	269	314	359
GV2G454 (2 x 54)	260	314	368	422

GV2G●●● with terminal block GV1G09

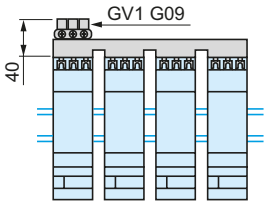

GV2G554

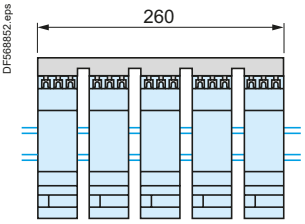

GV2G245 and G254

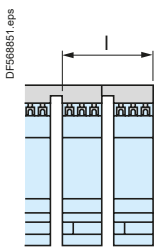

	l
GV2G245 (2 x 45)	89
GV2G254 (2 x 54)	98

GV2G345 et G354

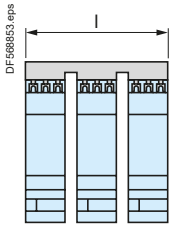

	l
GV2G345 (2 x 45)	**134**
GV2G354 (2 x 54)	**152**

AK5JB144

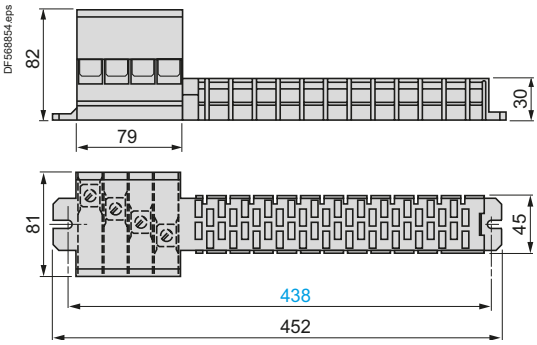

AK5PC13, PC33, PC33L

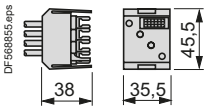

(1) Depth with communication module.
(2) Retractable fixing lugs.

References: pages A4/10 and A4/11
Characteristics: page A4/44
Curves: pages A4/56 to A4/61
Schemes: pages A4/63 to A4/76

Dimensions, mounting

Limiter-disconnector LUALB1
Disconnector LUALB10

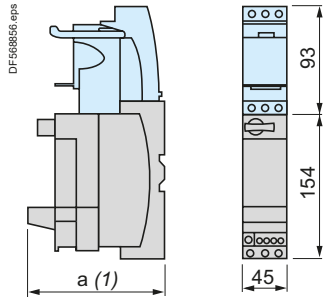

	a
With Modbus module	135
With Advantys STB, CANopen, Profibus DP or DeviceNet modules	147

Current limiter LA9LB920

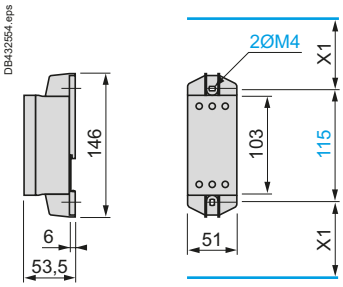

X1: Electrical clearance = 30 mm for Ue ≤ 690 V

Door interlock mechanisms

LU9APN21, LU9APN22, LU9APN24

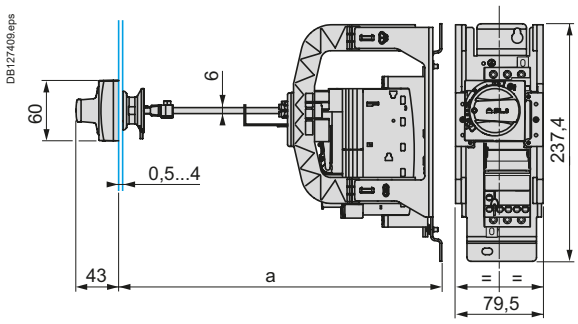

Door cut-out

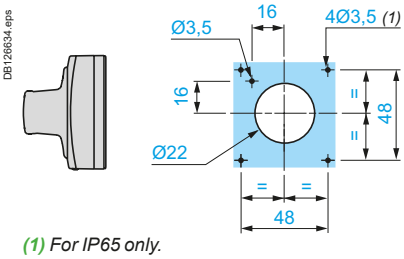

(1) For IP65 only.

	a	
	Mini	**Maxi**
LU9APN●●	191	300
LU9APN●● + GVAPK12	300	483

Splitter boxes

LU9GC3 (Modbus) LU9G02 and LU9G03

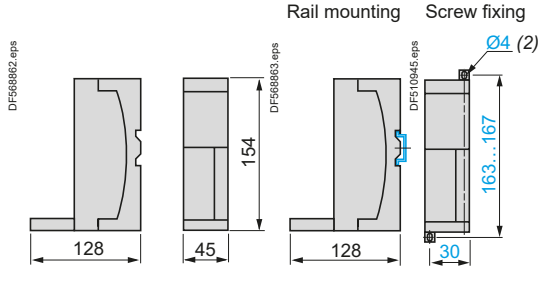

LU9GC7 (Profibus DP)

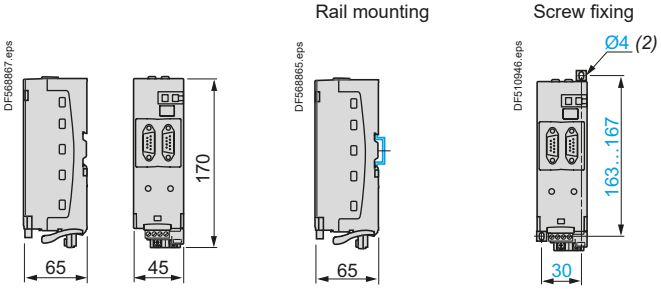

(1) Depth with communication module.
(2) Retractable fixing lugs.

References:
pages A4/20, A4/31, A4/32

Schemes

12, 32, 38 A power bases with standard, advanced or multifunction control unit

LUB

Non-reversing

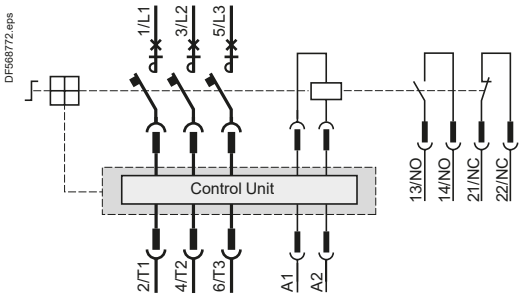

With control unit LUCC or LUCM

Connection of a single-phase motor

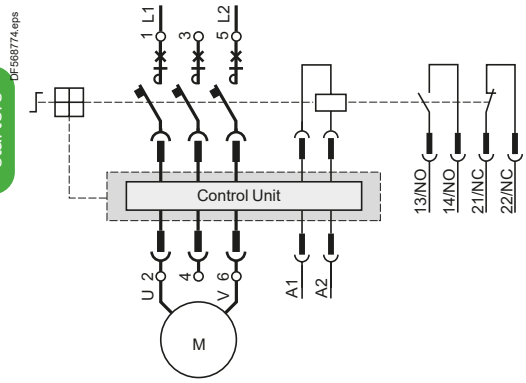

LU2B

Reversing

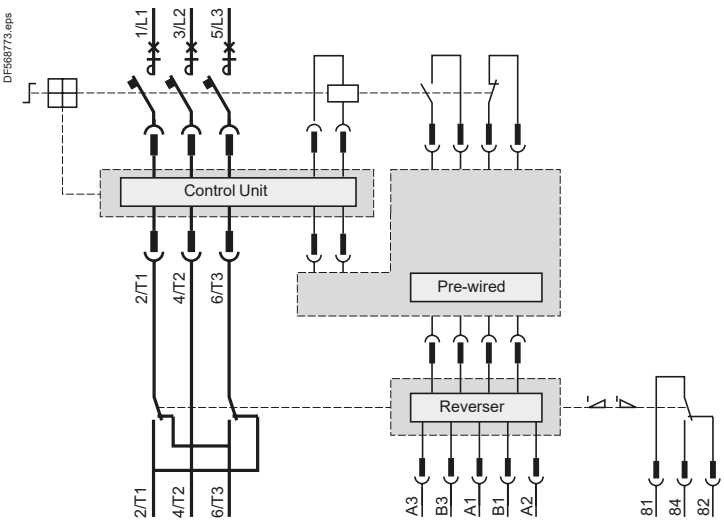

Control terminal block

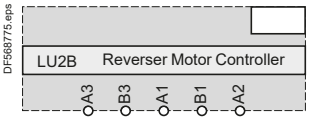

Reverser blocks

LU2M

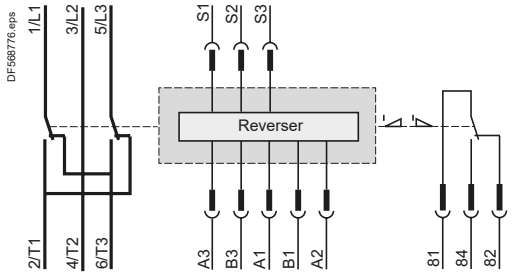

Control terminal block

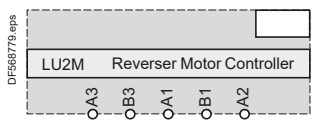

LU6M

Control terminal blocks

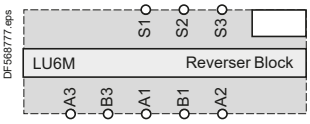

With pre-wired connector LU9MRC

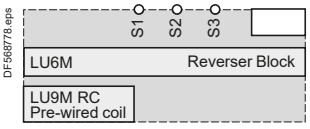

Basic scheme

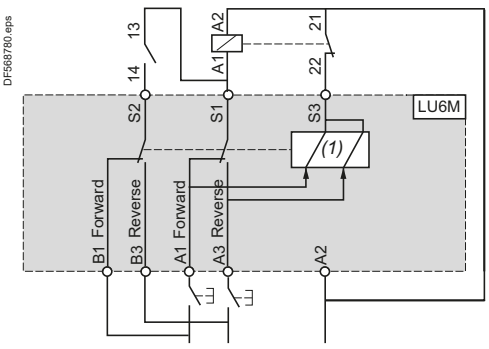

S1 *Start next stage*
S2 *Electrical interlocking*
S3 *Maintaining contact*
B1 *Maintain forward running*
B3 *Maintain reverse running*
A1 *Pulse forward running*
A2 *Common*
A3 *Pulse reverse running*
(1) Electronically operated bistable electromagnet.

Add-on contact blocks

LUA1C11

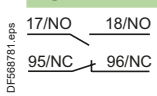

LUA1C20

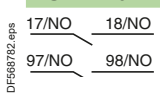

LUA8E20

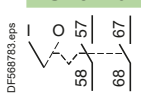

Add-on contact modules

LUFN20

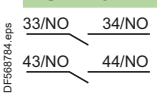

LUFN11

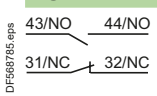

LUFN02

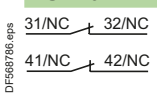

References:
pages A4/10 and A4/11

Characteristics:
pages A4/44 and A4/45

Curves:
pages A4/56 to A4/61

Life Is On Schneider Electric

Control units

Standard control units LUCA

Basic scheme

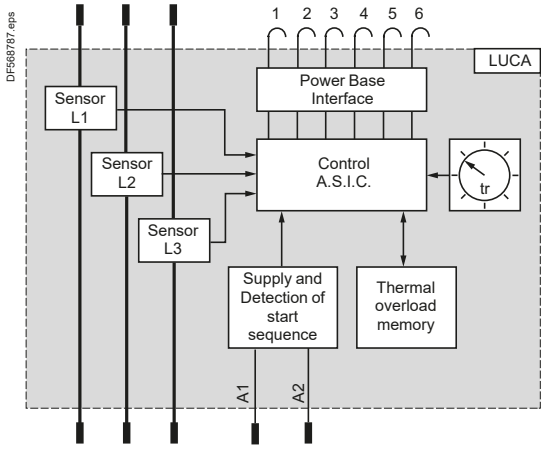

1 and 2 Trips
3 and 4 Electromagnet
5 Power base rating
6 N/C

Advanced control units LUCB, LUCC, LUCD

Basic schemehd

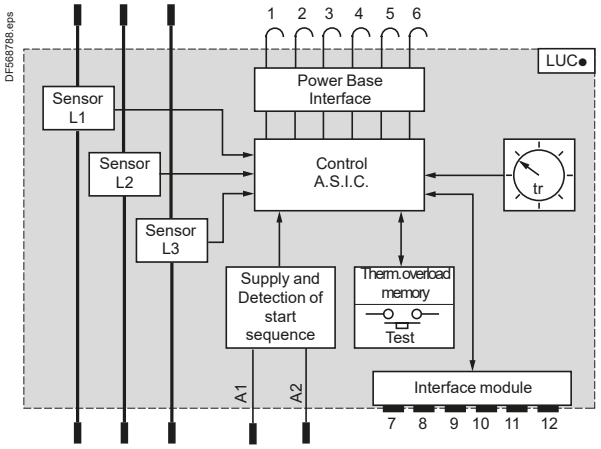

1 and 2 Trips
3 and 4 Electromagnet
5 Power base rating
6 N/C
7 Earth
8 Thermal status/Set
9 Reset mode/Reset
10 (Im/Ir)
11 Vc2
12 Vc1

Multifunction control units LUCM

Control terminal block

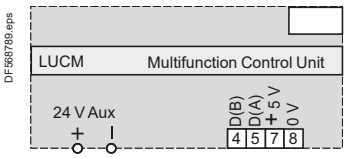

Basic scheme

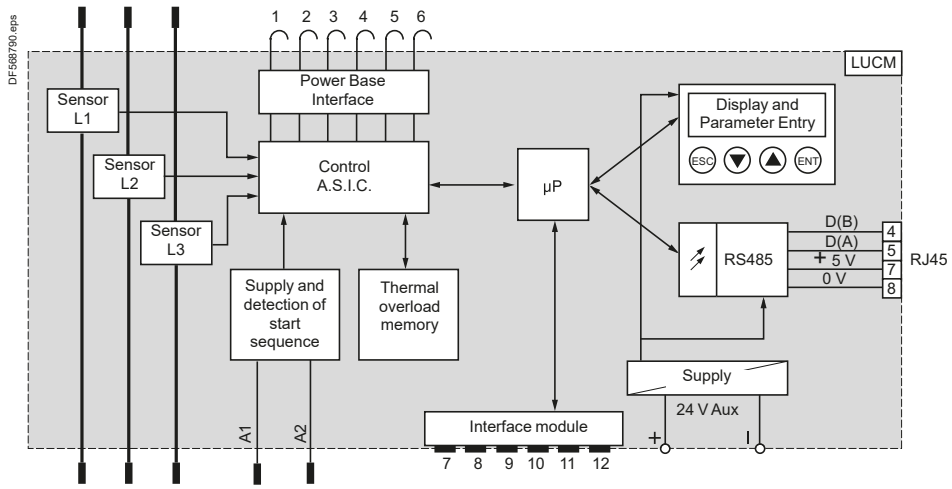

1 and 2 Trips
3 and 4 Electromagnet
5 Power base rating
6 N/C
7 Earth
8 N/C
9 Earth
10 (Im/Ir)
11 Rx/Tx
12 Vc1

References:
pages A4/11 and A4/12
Characteristics:
pages A4/47 to A4/49
Curves:
pages A4/56 to A4/58

Function modules

Alarm
LUFW10

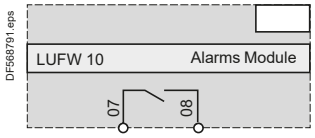

Basic scheme

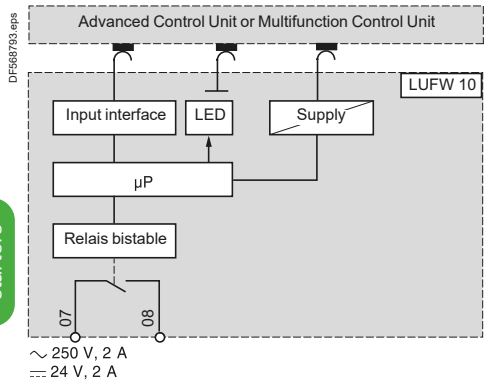

~ 250 V, 2 A
⎓ 24 V, 2 A

Indication of motor load
LUFV2

4-20 mA output

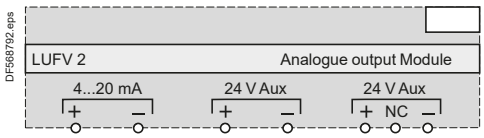

Basic scheme

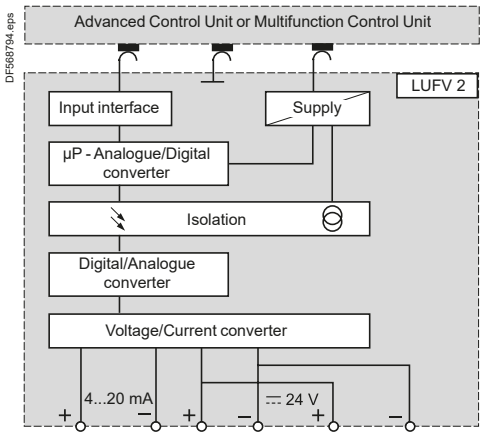

100 Ω < load < 500 Ω ⎓ 30 V max and 40 mA min

Communication modules

Communication modules ASILUFC5 and ASILUFC51

Without pre-wired coil connection

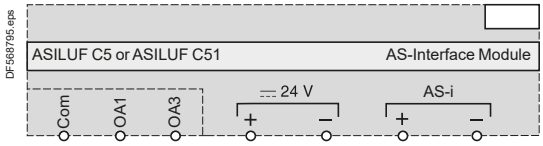

With pre-wired coil connection LU9BN11C

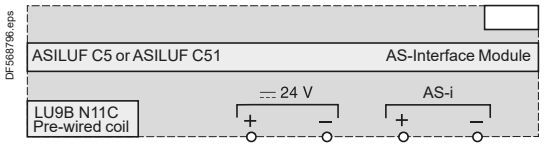

With pre-wired coil connection LU9MRC

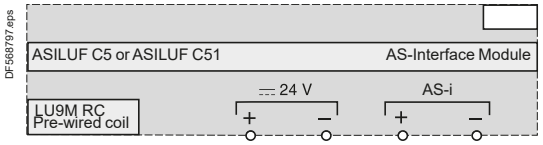

Basic scheme

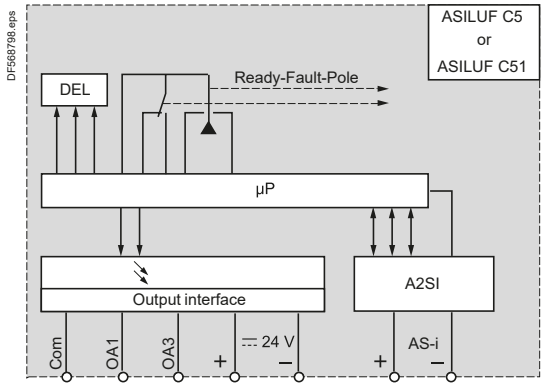

References:
pages A4/13, A4/24

Characteristics:
pages A4/50 to A4/55

Life Is On Schneider Electric

Communication modules (continued)

With pre-wired coil connection LU9BN11C

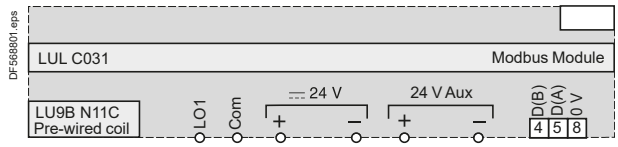

With pre-wired coil connection LU9MRC

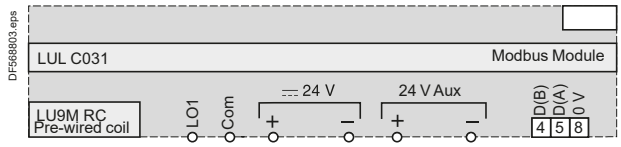

Basic scheme

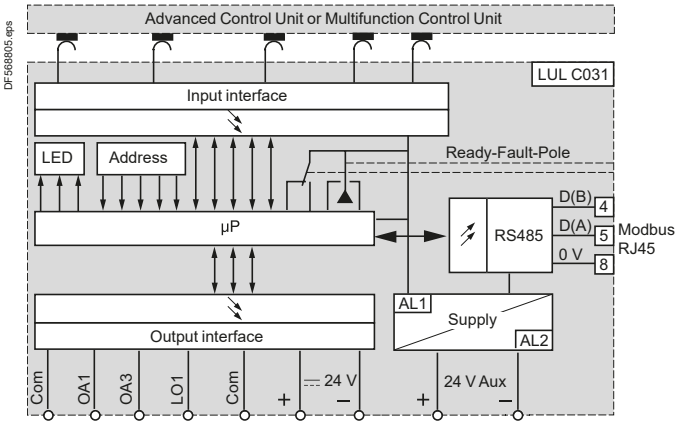

Modbus communication module LULC033

Without pre-wired coil connection

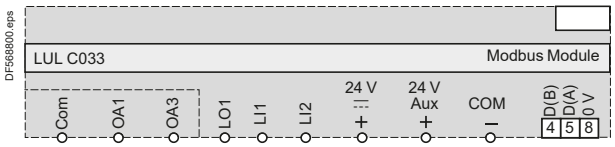

With pre-wired coil connection LU9BN11C

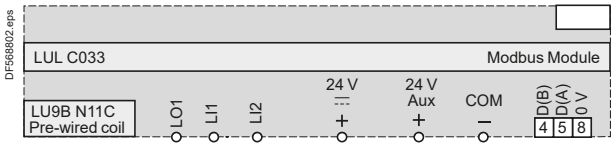

With pre-wired coil connection LU9MRC

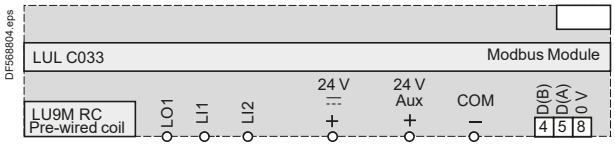

Basic scheme

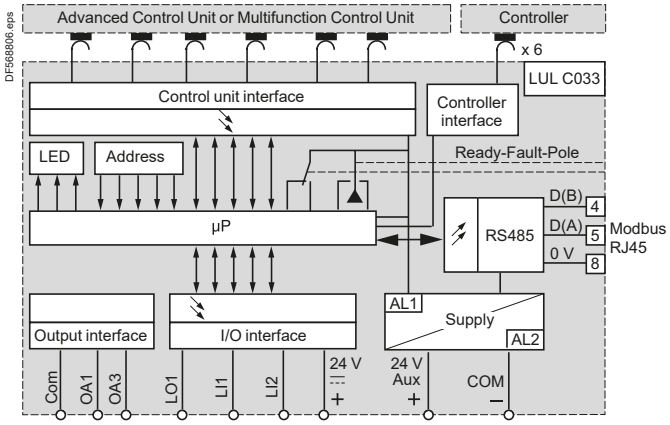

References:
page A4/26

Characteristics:
pages A4/51 to A4/55

Schemes

Communication modules (continued)

Profibus DP communication module LULC07

Without pre-wired coil connection

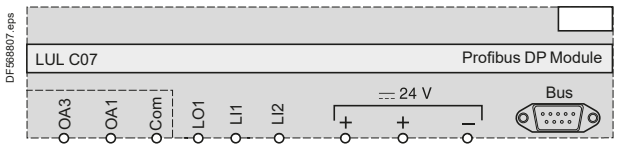

With pre-wired coil connection LU9BN11LC

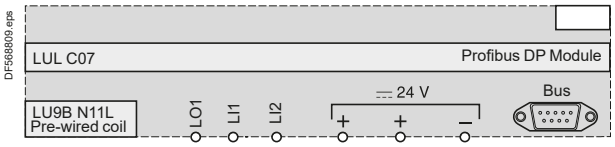

With pre-wired coil connection LU9MRC

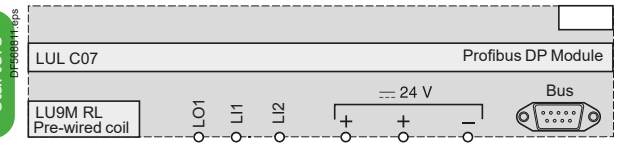

Basic scheme

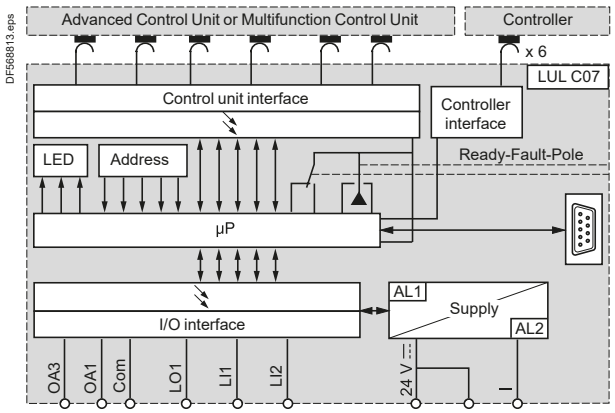

CANopen communication module LULC08

Without pre-wired coil connection

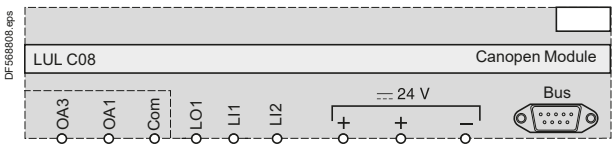

With pre-wired coil connection LU9BN11LC

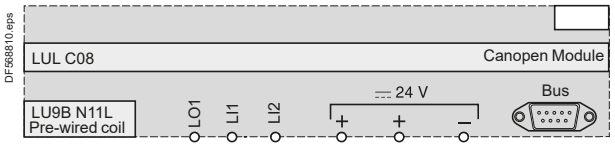

With pre-wired coil connection LU9MRC

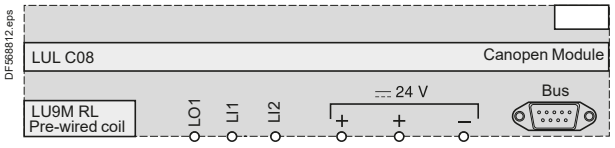

Basic scheme

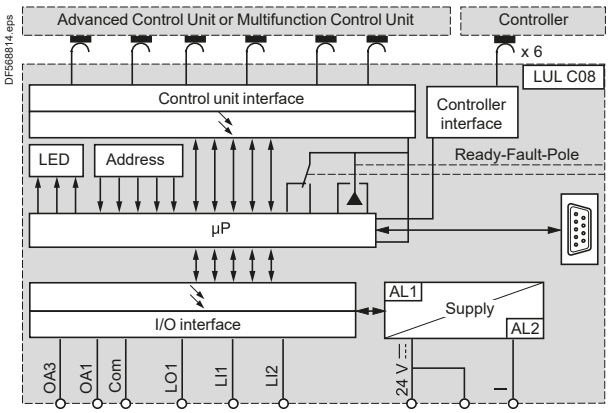

DeviceNet communication module LULC09

Without pre-wired coil connection

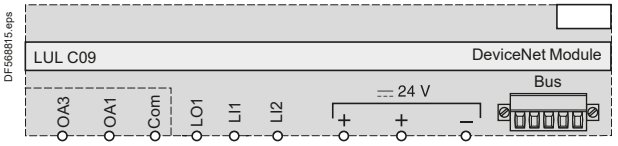

With pre-wired coil connection LU9BN11LC

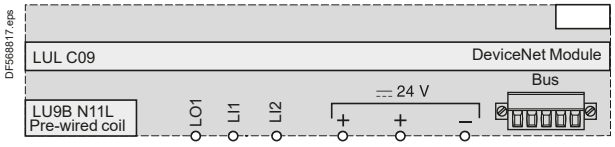

With pre-wired coil connection LU9M RL

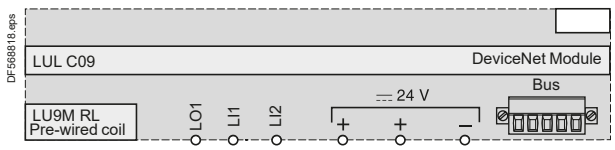

Basic scheme

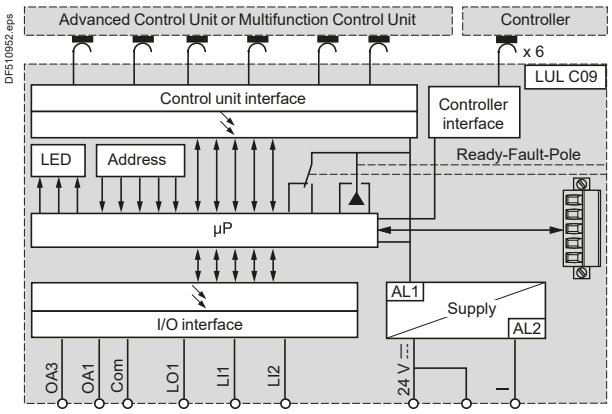

References:
pages A4/25, A4/28, A4/29

Characteristics:
pages A4/51 to A4/55

Life Is On Schneider Electric

Communication modules (continued)

Advantys STB communication module LULC15

Without pre-wired coil connection

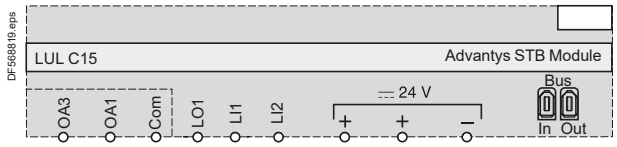

With pre-wired coil connection LU9BN11LC

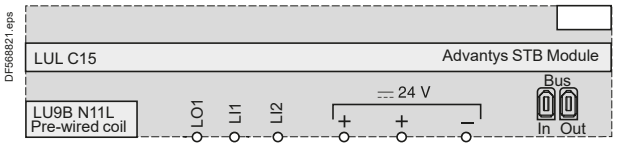

With pre-wired coil connection LU9MRC

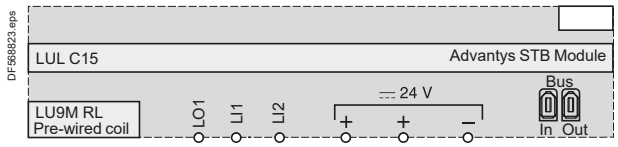

Basic scheme

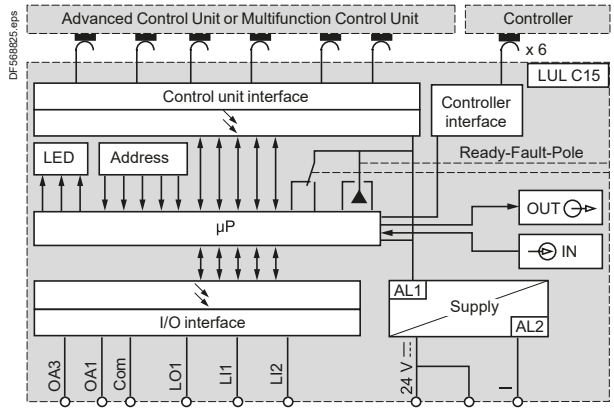

Parallel wiring modules

Without pre-wired coil connection

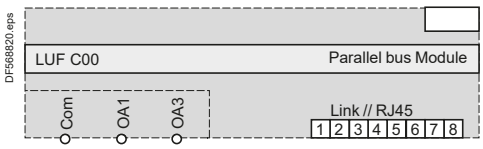

With pre-wired coil connection LU9BN11LC

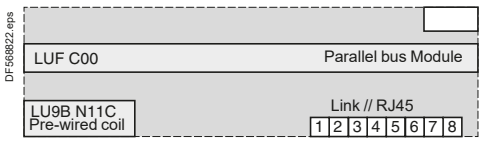

With pre-wired coil connection LU9MRC



Basic scheme

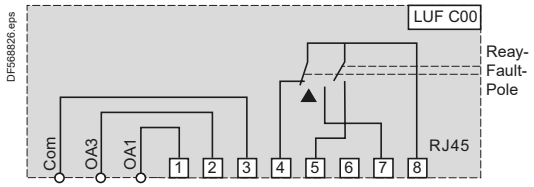

1 Forward running
2 Reverse running
3 Output common
4 Selector in position ⏻
5 Pole state
6 Reserved
7 Fault
8 Input common

Profibus DP power supply module LU9GC7

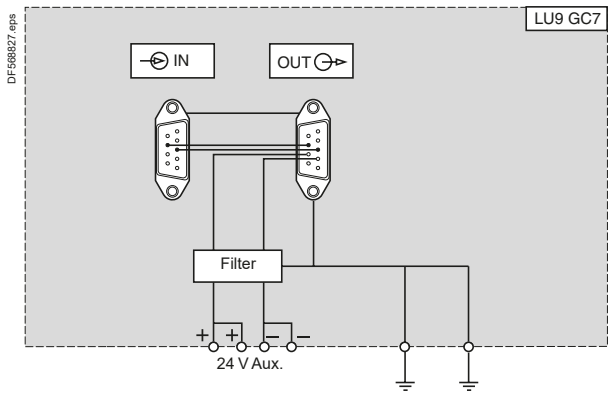

References:
pages A4/20, A4/27, A4/28

Characteristics:
pages A4/51 to A4/55

Communication modules (continued)

Wiring hub and splitter boxes

Modbus hub LU9GC3

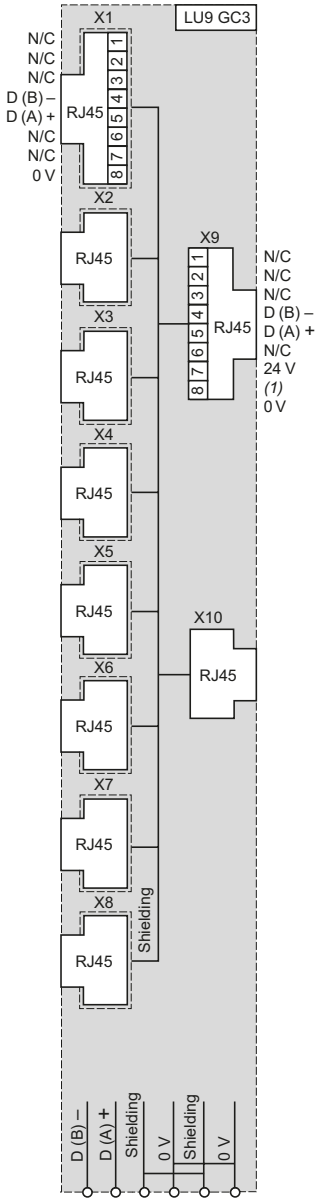

Parallel wiring splitter box LU9G02

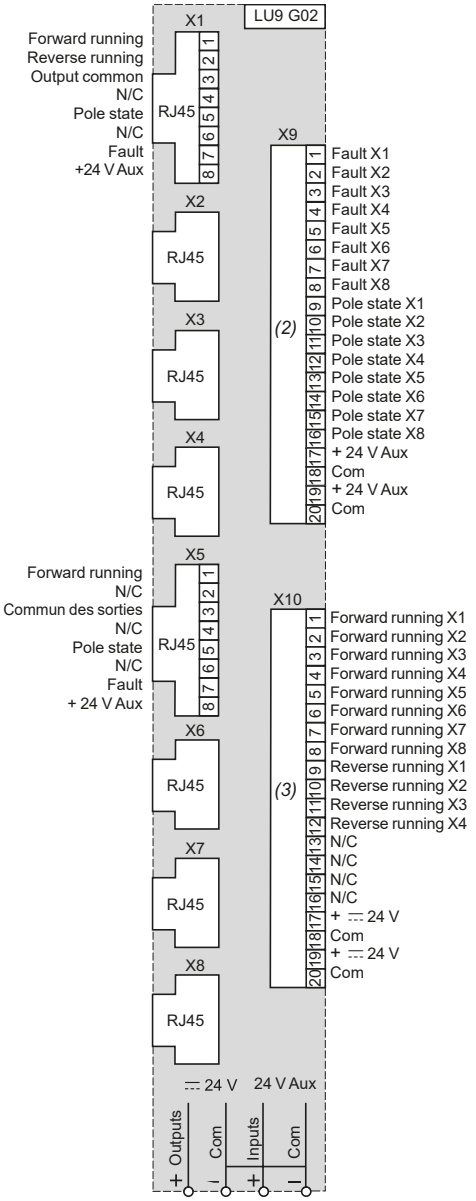

Parallel wiring splitter box LU9G03

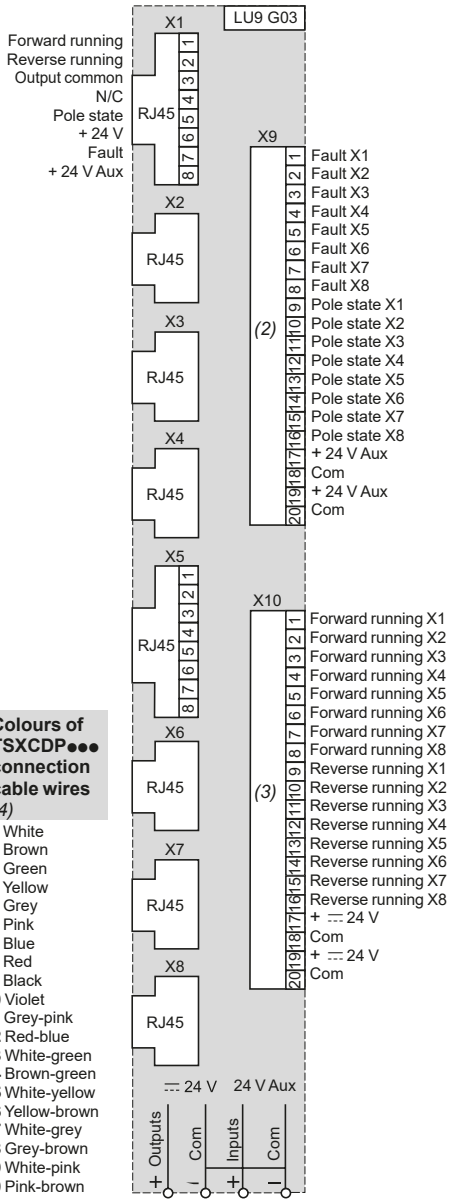

Colours of TSXCDP●●● connection cable wires *(4)*

1	White
2	Brown
3	Green
4	Yellow
5	Grey
6	Pink
7	Blue
8	Red
9	Black
10	Violet
11	Grey-pink
12	Red-blue
13	White-green
14	Brown-green
15	White-yellow
16	Yellow-brown
17	White-grey
18	Grey-brown
19	White-pink
20	Pink-brown

(1) Not connected on connectors X1 to X8. Only present on RJ45 IN and OUT connectors.
(2) 20-way HE10 input connector.
(3) 20-way HE10 output connector.
(4) Wire colours and corresponding HE10 connector pin numbers.

Gateways

LUFP1

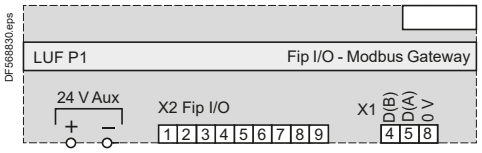

LUFP7

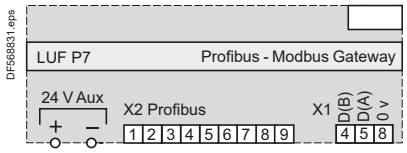

LUFP9

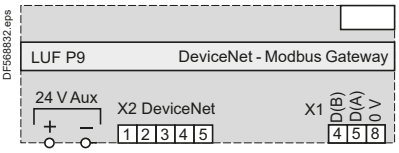

References:
pages A4/20 and A4/30
Dimensions:
pages A4/63 and A4/70

Schemes

Non-reversing starter-controllers LUB

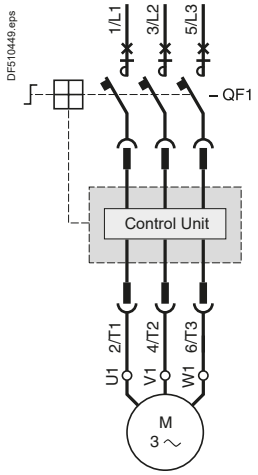

2-wire control via 2-position switch

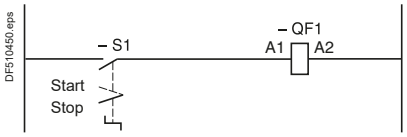

3-wire control, pulsed start with maintaining contact

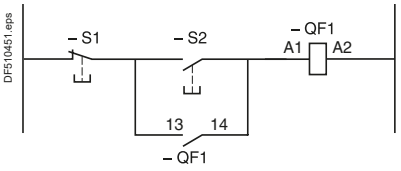

Connection of a motor load indicator module LUFV2

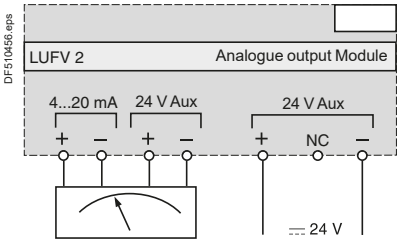

Connection of thermal overload fault signalling modules LUFDA10

Automatic reset

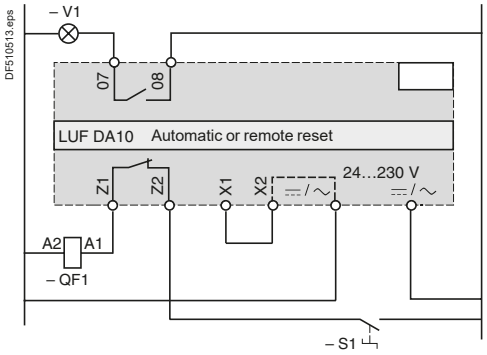

Remote reset

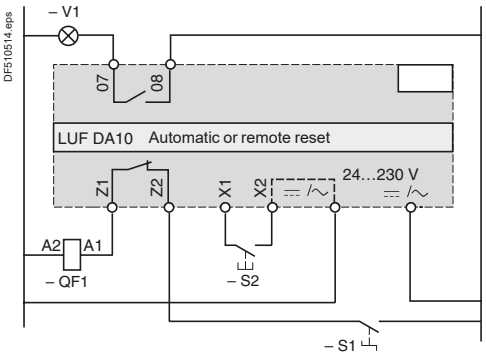

Control via Modbus communication module LULC033

Without pre-wired coil connection

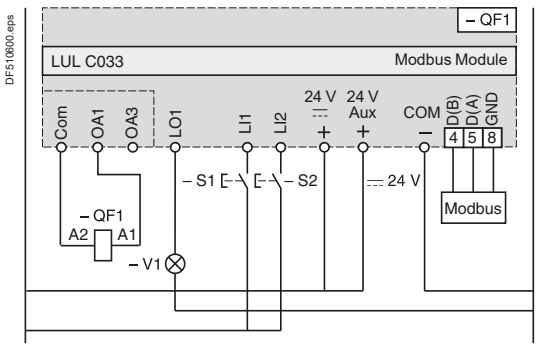

References:
pages A4/10 to A4/14

Non-reversing starter controllers LUB (continued)

Control by communication modules ASILUFC5 and ASILUFC51

Without pre-wired coil connection

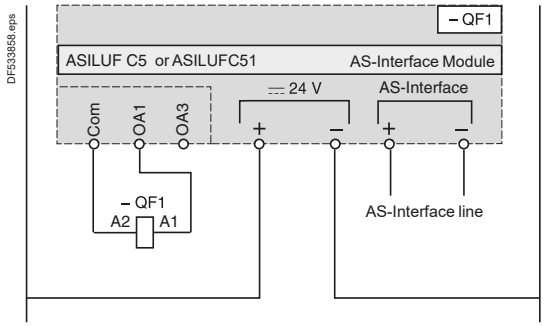

Without pre-wired coil connection
With local control

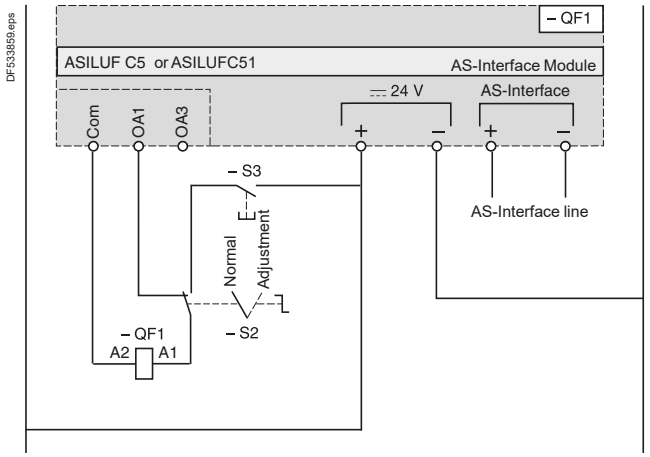

With pre-wired coil connection LU9BN11C

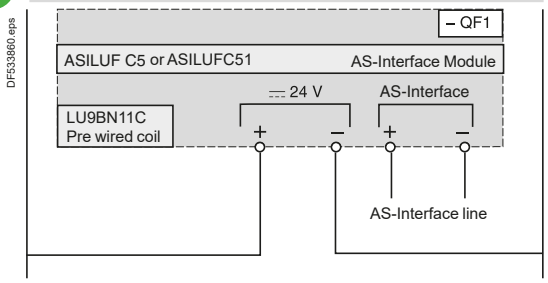

Without pre-wired coil connection
With local control

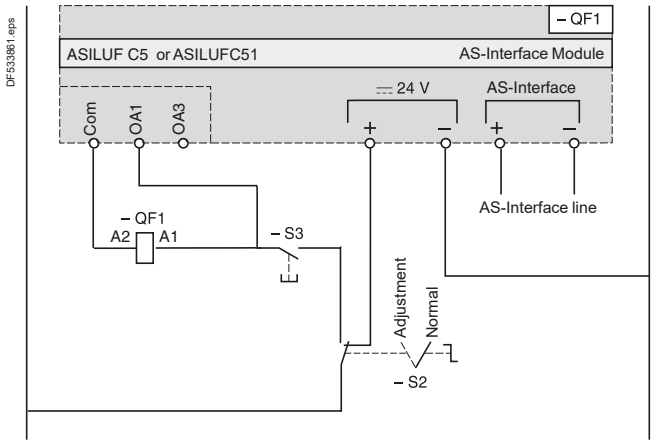

Without pre-wired coil connection
With multifunction control unit LUCM

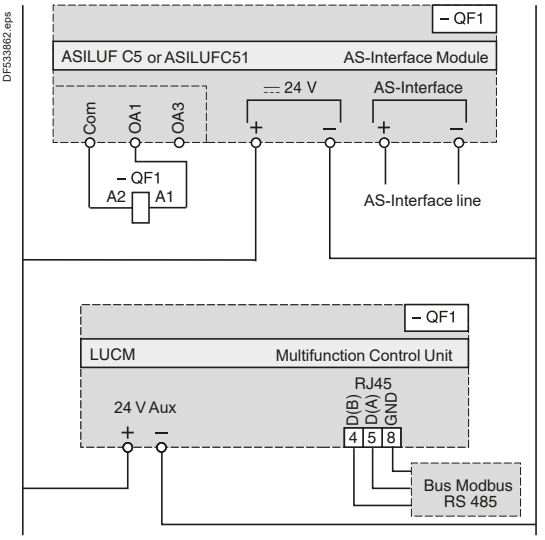

Ultra motor starters
Ref.

References:
page A4/14

Schemes

Standard or advanced power base

ON/OFF control (1 direction of rotation)

Push buttons wiring

DB414426_b.eps

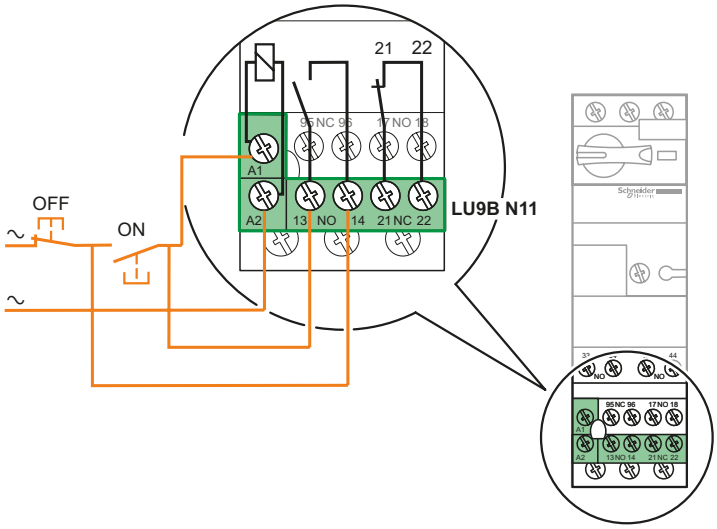

ON indication

"Motor RUN" indicator wiring

DB414428.eps

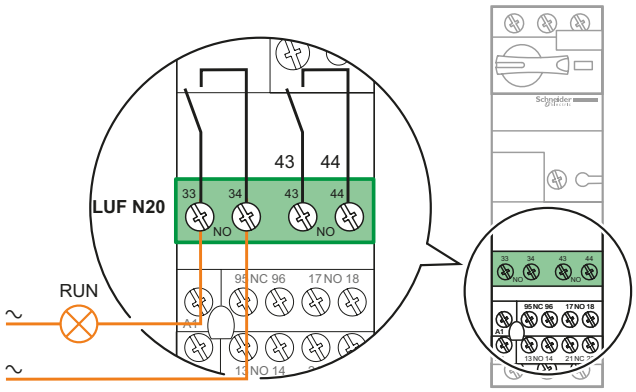

"Motor starter READY" indicator wiring

DB414429.eps

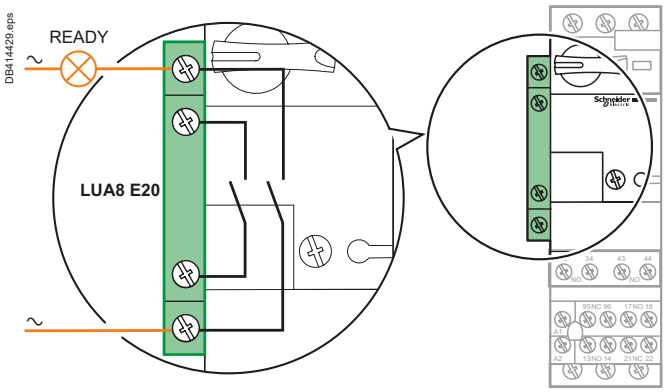

ALARM indication

Protection device status indicator wiring

DB432552.eps

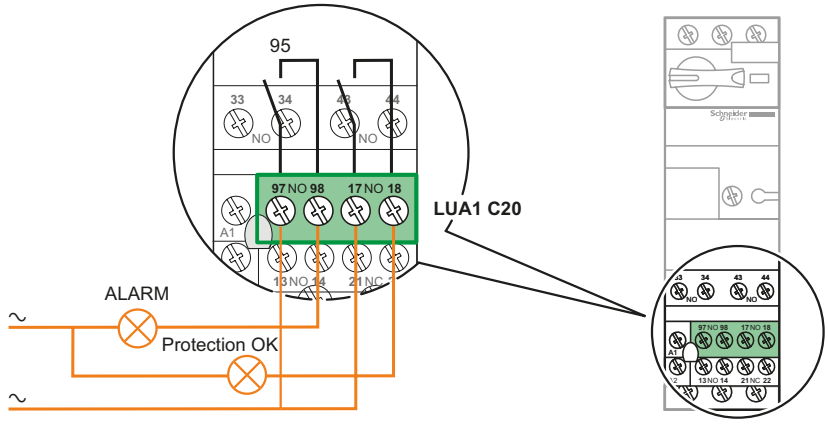

References:
pages A4/10 to A4/13

Reversing starter-controllers LUB

2-wire control via 3-position switch

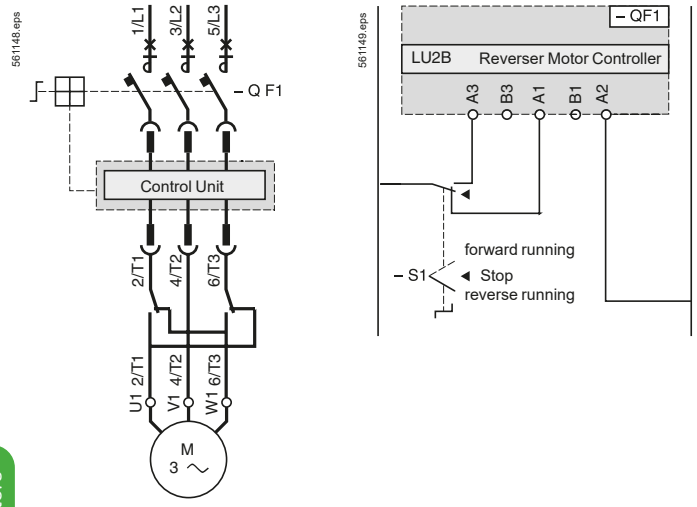

3-wire control, pulsed start with maintaining contact

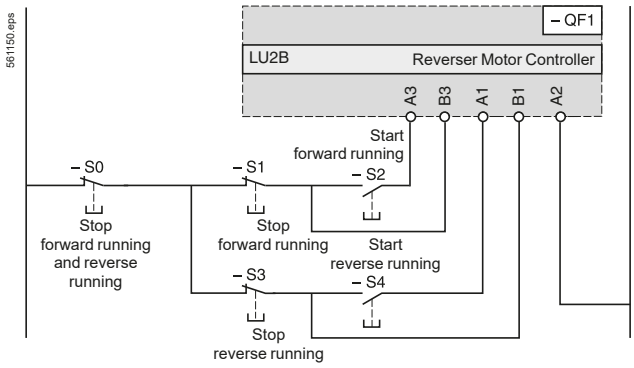

Control by communication modules ASILUFC5 and ASILUFC51

With pre-wired coil connection LU9MRC
With multifunction control unit LUCM

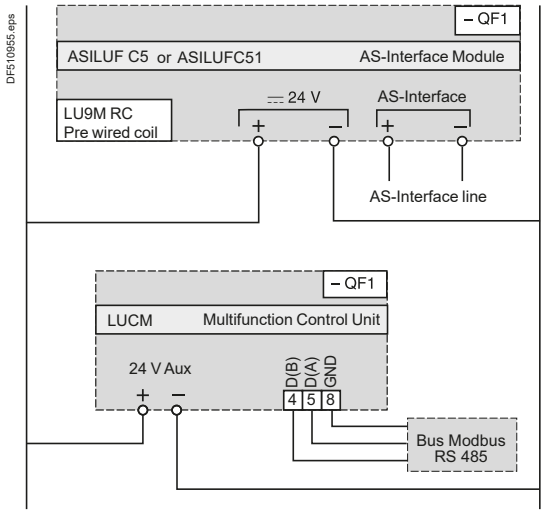

3-wire control, pulsed start with maintaining contact and limit switches

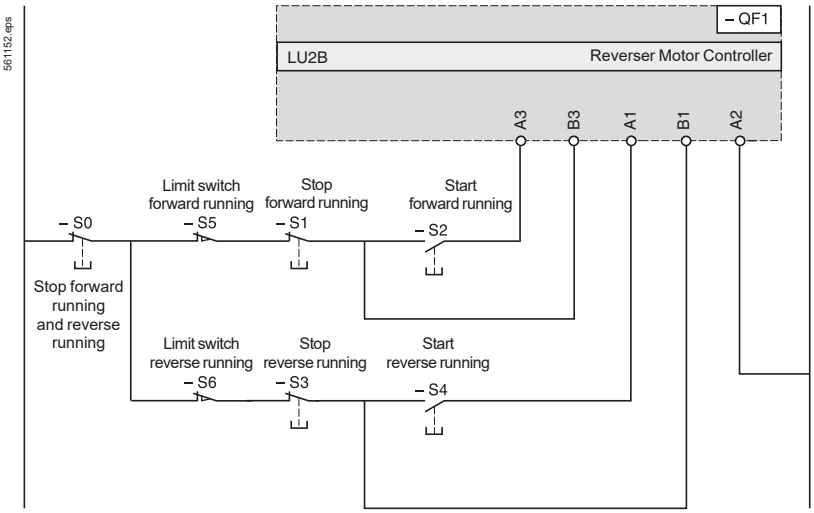

Control by communication modules ASILUFC5 and ASILUFC51

Without pre-wired coil connection
With running direction pilot lights and limit switches

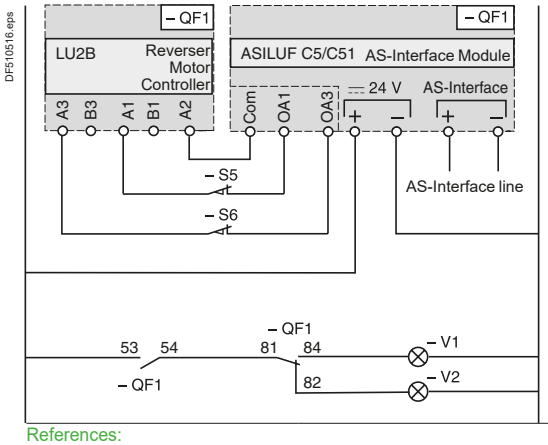

References:
pages A4/10 and A4/24

Reversing starter controllers LU2B (continued)

Control via Modbus communication module LULC033

Without pre-wired coil connection. With local control

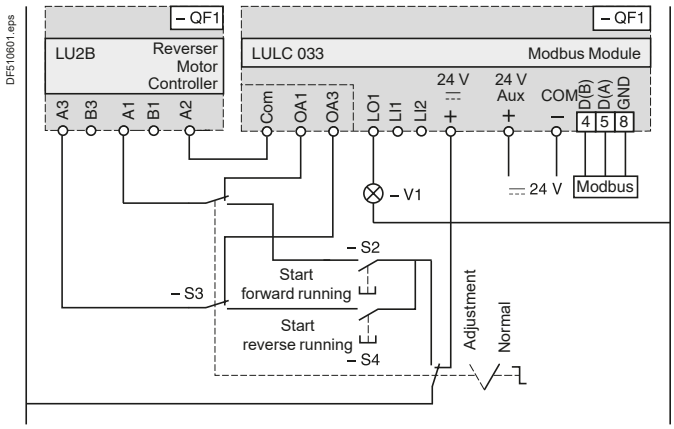

Reversing starter-controllers LUB + LU6M

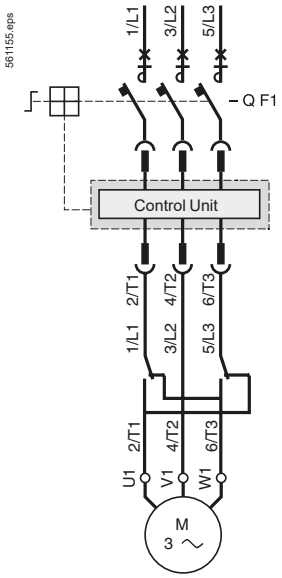

3-wire control, pulsed start with maintaining contact

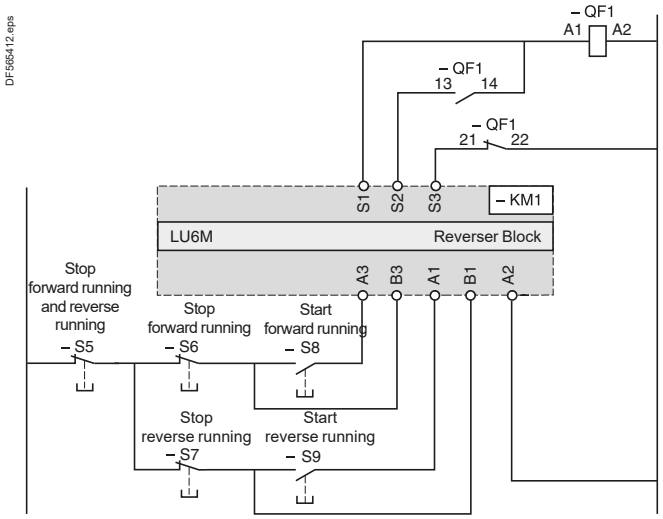

2-wire control via 3-position switch

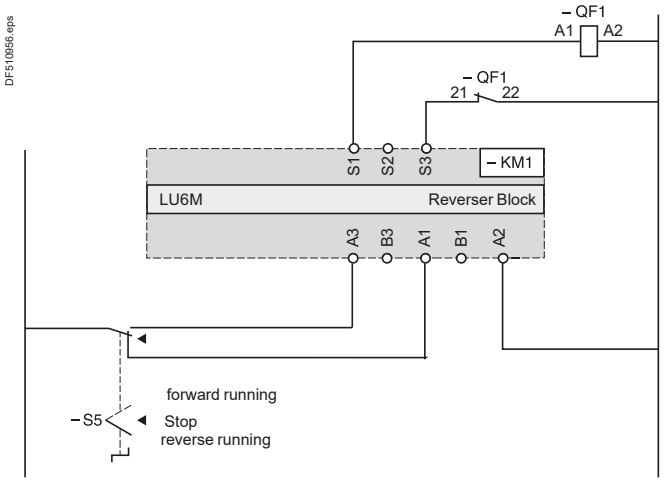

References:
page A4/10

Power base with vertical mounting reverser block

FW/REV/OFF control (2 directions of rotation)

Push buttons wiring

DB414430R.eps

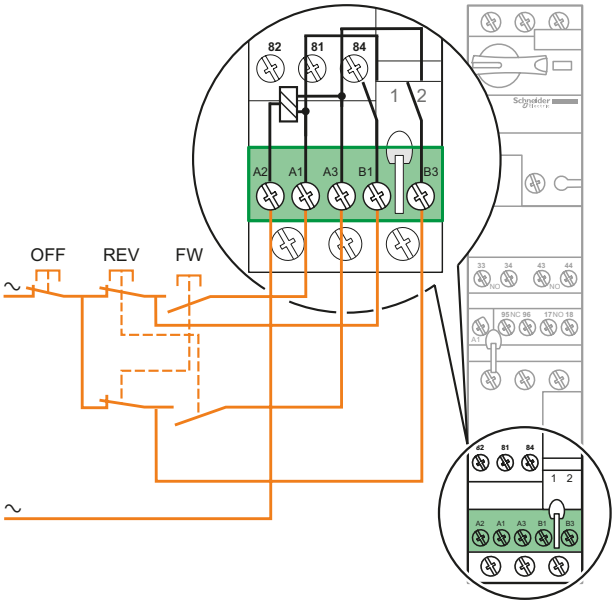

FW/REV control

FW, REV indicators wiring

DB414431R.eps

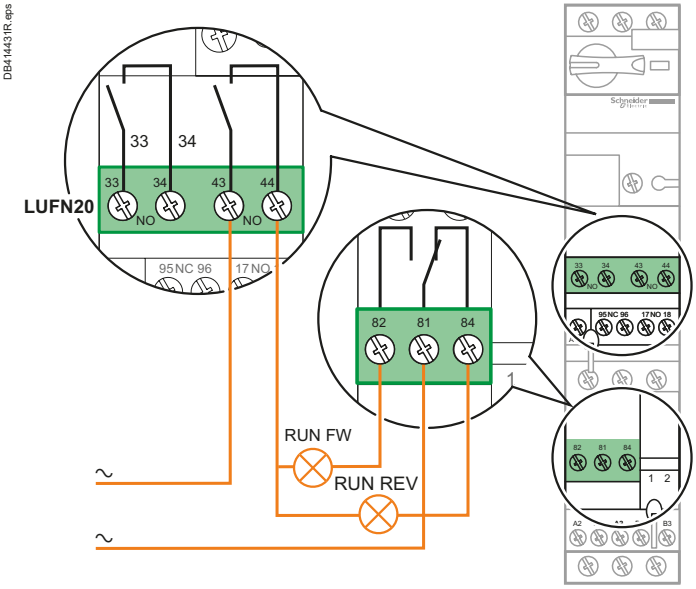

Ultra motor starters
Ref.

References:
pages A4/10 and A4/13

Characteristics

Environmental characteristics

Type of starter			ATSU01N2●●LT
Conformity to standards			Altistart U01 electronic starters have been developed to conform to the strictest international standards and the recommendations relating to electrical industrial control devices (IEC, EN), in particular standard IEC/EN 60947-4-2.
Electromagnetic compatibility EMC			
	Conducted and radiated emissions		CISPR 11 level B, IEC 60947-4-2, level B
	Harmonics		IEC 1000-3-2, IEC 1000-3-4
	EMC immunity		EN 50082-2, EN 50082-1
	Electrostatic discharge		IEC 61000-4-2 level 3
	Immunity to radiated radio-electrical interference		IEC 61000-4-3 level 3
	Immunity to electrical transients		IEC 61000-4-4 level 4
	Voltage/current impulse		IEC 61000-4-5 level 3
	Conducted and radiated emissions		IEC 61000-4-6 level 3
	Immunity to conducted interference caused by radio-electrical fields		IEC 61000-4-11
	Damped oscillating waves		IEC 61000-4-12 level 3
CE marking			The starters carry CE marking in accordance with the European low voltage directives IEC/EN 60947-4-2.
Product certifications			UL, CSA, C-Tick and CCC
Degree of protection			IP 20
Degree of pollution			2 conforming to IEC/EN 60947-4-2
Vibration resistance			1.5 mm peak to peak from 3 to 13 Hz, 1 gn from 13 to 150 Hz, conforming to IEC/EN 60068-2-6
Shock resistance			15 gn for 11 ms conforming to IEC/EN 60068-2-27
Relative humidity			5…95 % without condensation or dripping water conforming to IEC 60068-2-3
Ambient temperature around the unit	Storage	°C	-25…+70 conforming to IEC/EN 60947-4-2
	Operation	°C	-10…+40 without derating, up to 50°C with current derating of 2 % per °C above 40°C
Maximum operating altitude		m	1000 without derating (above this, derate the current by 2.2 % per additional 100 m)
Operating position Maximum permanent angle in relation to the normal vertical mounting position			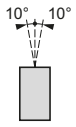

Electrical characteristics

Type of starter			ATSU01N2●●LT
Category of use	Conforming to IEC 60947-4-2		Ac-53b
Rated operating voltage	3-phase ∼ voltage	V	200 - 10 % to 480 + 10 %
Frequency		Hz	50 - 5 % to 60 + 5 %
Output voltage			Maximum 3-phase voltage equal to line supply voltage
Control supply voltage			24 V ⎓, 100 mA ±10 %
Rated operating current		A	6...32
Adjustable starting time		s	1...10
Adjustable deceleration time		s	1...10
Starting torque		%	30.... 80 % of DOL motor starting torque

Type of starter	ATSU		01N206LT	01N209LT	01N212LT	01N222LT	01N232LT
Control power supply consumption			24 V ⎓, 65 mA			24 V ⎓, 100 mA	
Power dissipated	At full load at end of starting	W	1.5	1.5	1.5	2.5	2.5
	In transient state at 5 times the rated operating current	W	61.5	91.5	121.5	222.5	322.5

Type of starter			ATSU01N206LT to ATSU01N222LT			ATSU01N232LT		
Use								
	Starting time	s	1	5	10	1	5	10
	Maximum number of cycles per hour		100	20	10	50	10	5

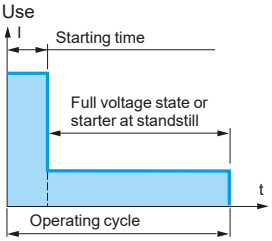

References:
page A4/38

Dimensions:
page A4/79

Schemes:
pages A4/80 to A4/83

Electrical characteristics (continued)

Logic input power supply (electrically isolated between power and control) + 24 V, COM			24 V ±10 % Isolated Max. current 100 mA
Logic inputs LI1, LI2, BOOST Stop, run and boost on start-up functions			Logic inputs with impedance 27 kΩ; 24 V power supply (U max 40 V) Max. current 8 mA State 0 if U < 5 V and I < 0.2 mA State 1 if U > 13 V and I > 0.5 mA
Logic output LO1 End of starting signal			Open collector logic output: External 24 V power supply (minimum 6 V, maximum 30 V) Max. current 200 mA
Relay output R1A R1C			Normally open (N/O) contact Minimum switching capacity: 10 mA for 6 V ⎓ Maximum switching capacity on inductive load (cos φ = 0.5 and L/R = 20 ms): 2 A for 250 V ∿ or 30 V ⎓ (AC-15) Maximum operating voltage 440 V
LED signalling	Green LED		Starter powered up
	Yellow LED		Nominal voltage reached

Connections (maximum connection capacity and tightening torque)

Power circuit			**Connection to Ø4 mm screw clamps**
Flexible wire without cable end	1 conductor	**mm²**	1.5…10 8 AWG
	2 conductors	**mm²**	1.5…6 10 AWG
Flexible wire with cable end	1 conductor	**mm²**	1…6 10 AWG
	2 conductors	**mm²**	1…6 10 AWG
Rigid wire	1 conductor	**mm²**	1…10 8 AWG
	2 conductors	**mm²**	1…6 10 AWG
Tightening torque		**N.m**	1.9…2.5
Control circuit			**Screw connector**
Flexible wire without cable end	1 conductor	**mm²**	0.5…2.5 14 AWG
	2 conductors	**mm²**	0.5…1.5 16 AWG
Flexible wire with cable end	1 conductor	**mm²**	0.5…1.5 16 AWG
	2 conductors	**mm²**	0.5…1.5 16 AWG
Rigid wire	1 conductor	**mm²**	0.5…2.5 14 AWG
	2 conductors	**mm²**	0.5…1 17 AWG
Tightening torque		**N.m**	0.5

Torque characteristics (typical curves)

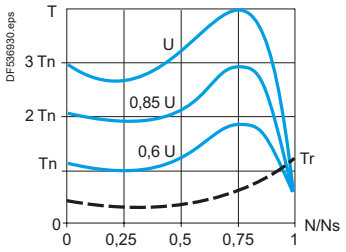

The diagram opposite shows the torque/speed characteristic of a cage motor in relation to the supply voltage.
The torque varies in line with the square of the voltage at a fixed frequency. The gradual increase in the voltage prevents the instantaneous current peak on power-up.

References:
page A4/38
Dimensions:
page A4/79
Schemes:
pages A4/80 to A4/83

Dimensions

Ultra combination (non-reversing power base) and ATSU01N206LT to ATSU01N212LT

Mounting on ⊔ (35 mm) rail with VW3G4104 connector

DF536571.eps

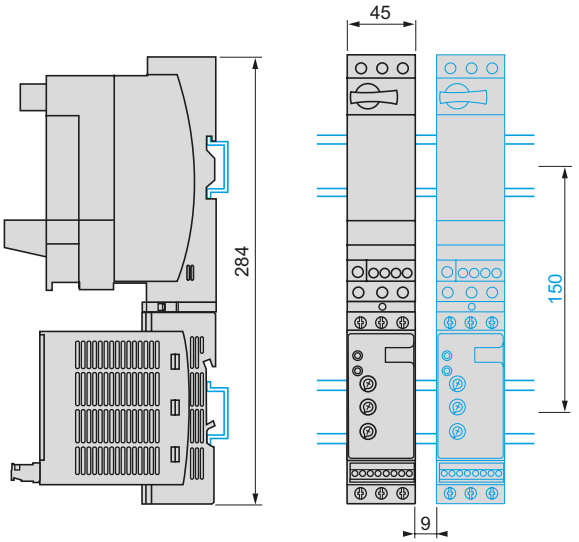

Ultra combination (non-reversing or reversing power base) and ATSU01N206LT to ATSU01N212LT

Side by side mounting

DF536572.eps

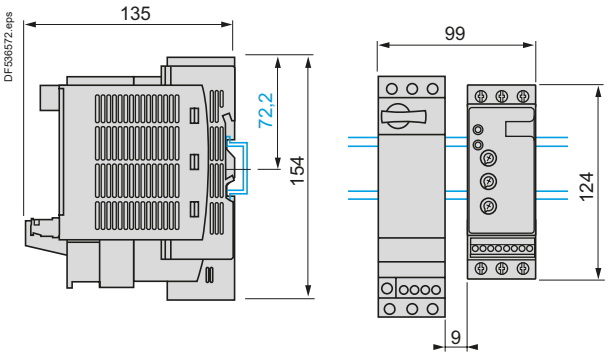

Ultra combination (non-reversing power base) and ATSU01N222LT to ATSU01N232LT

Mounting on ⊔ (35 mm) rail with VW3G4104 connector

DF536573.eps

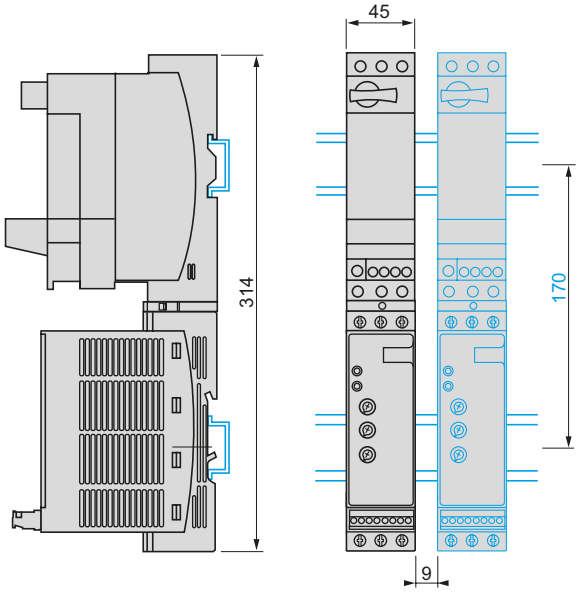

Ultra combination (non-reversing or reversing power base) and ATSU01N222LT to ATSU01N232LT

Side by side mounting

DF536574.eps

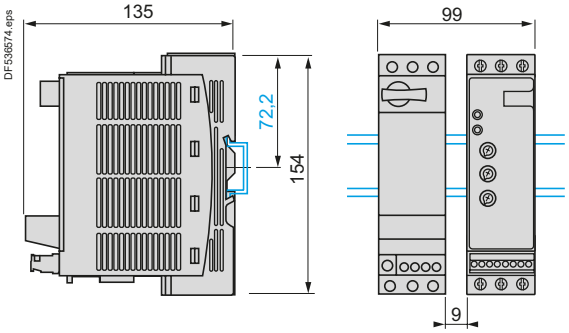

VW3G4104 connector

DF536575.eps

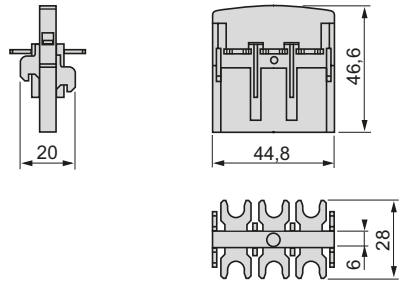

References:
page A4/38

Characteristics:
pages A4/77 and A4/78

Schemes:
pages A4/80 to A4/83

Schemes

ATSU01N2●●LT soft start/soft stop units

Power wiring

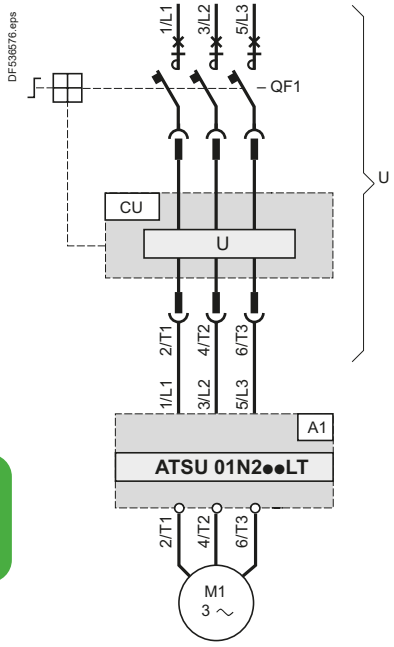

Power wiring with reversing unit

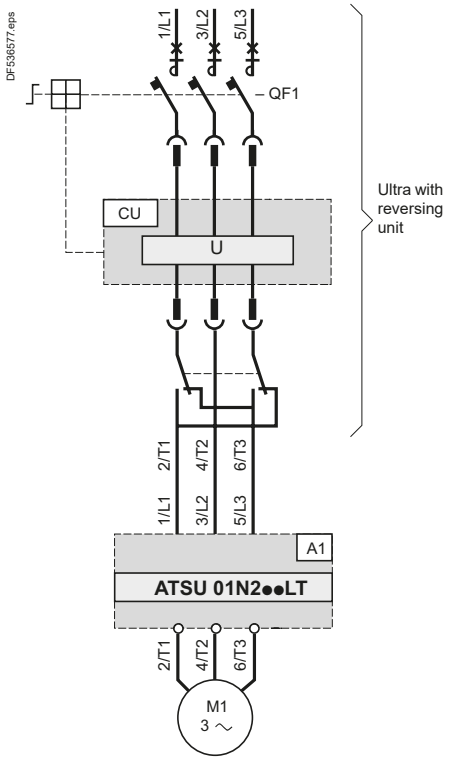

Compatible components

Code	Description
A1	Soft start/soft stop unit
QF1	Ultra controller-starter
CU	Ultra control unit

Ultra motor starters
Ref.

ATSU01N2●●LT soft start/soft stop units *(continued)*

Automatic 2-wire control

Without deceleration

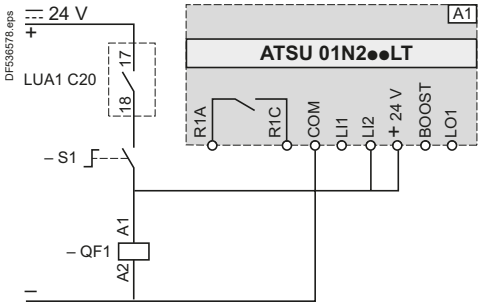

With and without deceleration

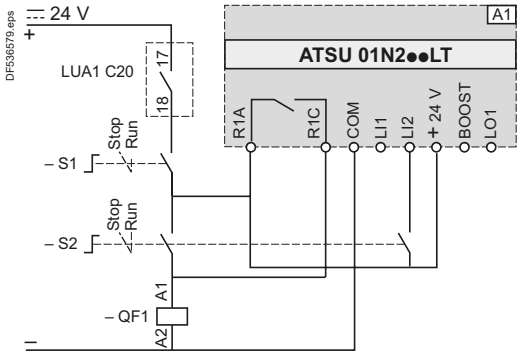

Functional diagrams

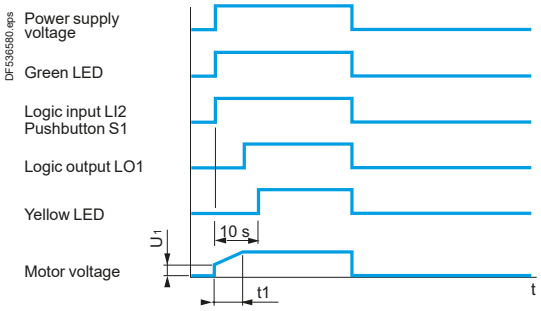

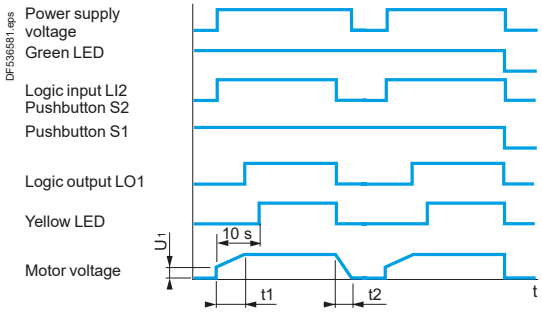

Automatic 3-wire control

Without deceleration

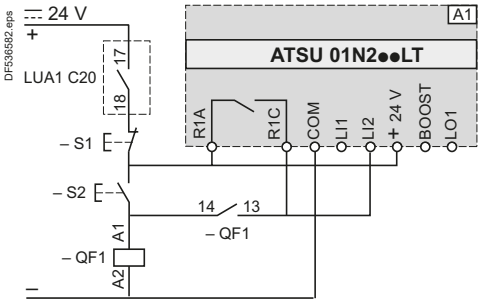

With deceleration

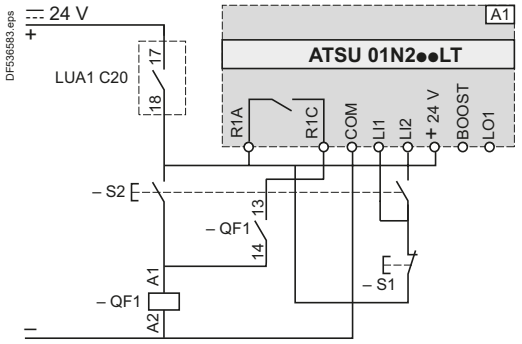

Functional diagrams

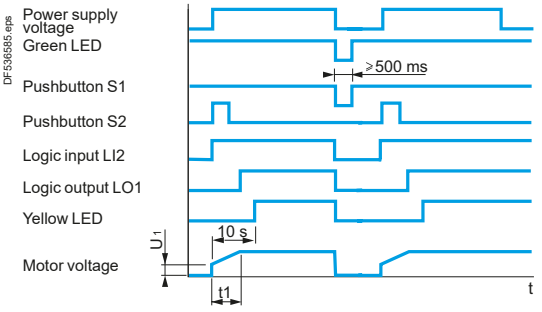

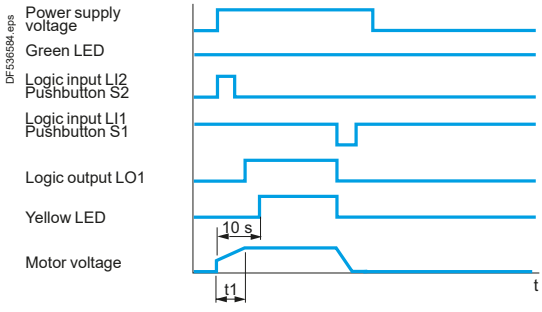

A1: Soft start/soft stop unit
S1, S2: XB4B or XB5B pushbuttons
QF1: Ultra controller-starter
t1: Acceleration time can be controlled by a potentiometer
t2: Deceleration time can be controlled by a potentiometer
U_1: Starting time can be controlled by a potentiometer

References:
page A4/38
Characteristics:
pages A4/77 and A4/78
Dimensions:
page A4/79

ATSU01N2●●LT soft start/soft stop units *(continued)*

Automatic 3-wire control, with reversing unit

Without deceleration

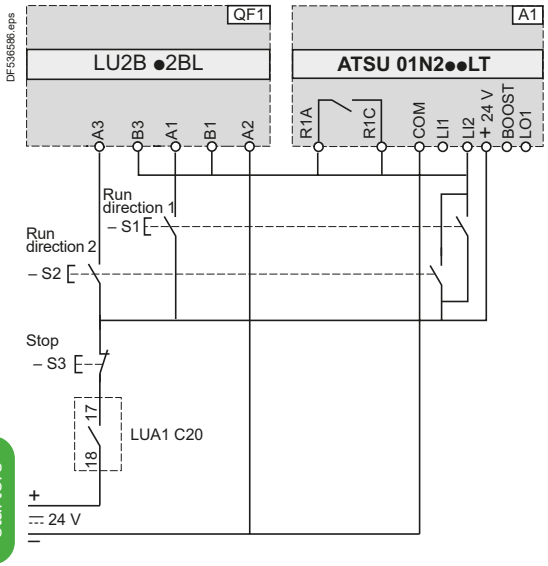

QF1: Ultra controller-starter with reversing unit
A1: Soft start/soft stop unit
S1, S2, S3: XB4B or XB5B pushbuttons
S3: minimum depression time 500 ms

With deceleration

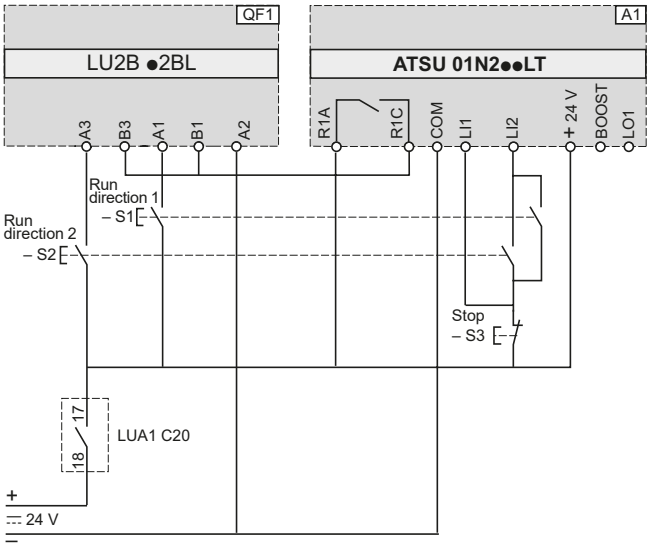

QF1: Ultra controller-starter with reversing unit
A1: Soft start/soft stop unit
S1, S2, S3: XB4B or XB5B pushbuttons

Boost on starting and end of starting signal

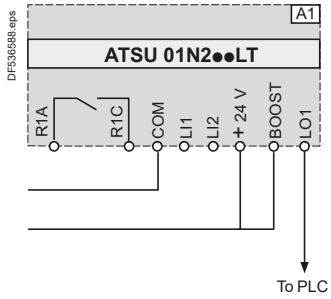

A1: Soft start/soft stop unit

Ultra motor starters
Ref.

ATSU01N2●●LT soft start/soft stop units *(continued)*

Automatic control with Modbus communication module, with and without deceleration

Without reversing unit

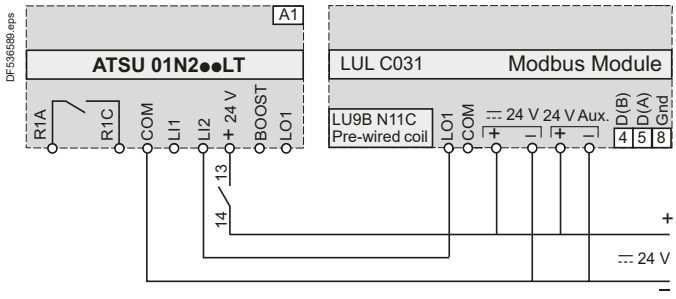

Function	Register	Bit	Value
Powering down U and ATSU			
–	704	0	0
Automatic control without deceleration			
Run	700	0	1
Stop	704	0	0
Automatic control with deceleration			
Run	700	0	1
Soft stop	700	0	0

A1: Soft start/soft stop unit

With reversing unit

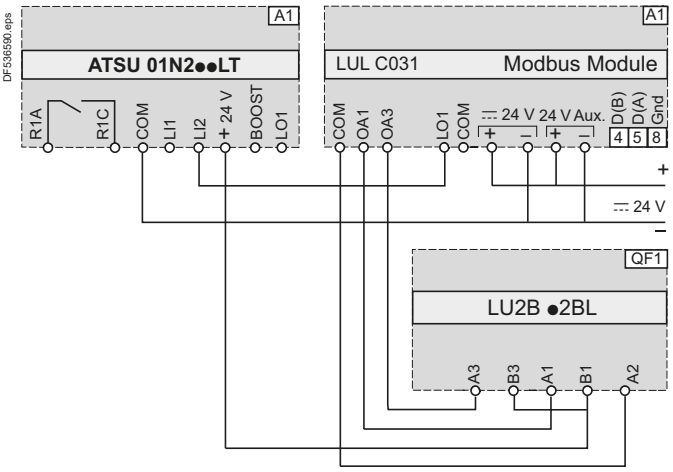

Function	Register	Bit	Value
Powering up U and ATSU			
Forward	704	0	1
Reverse	704	1	1
Powering down U and ATSU			
Forward	704	0	0
Reverse	704	1	0
Automatic control without deceleration			
Run	700	0	1
Stop forward	704	0	0
Stop reverse	704	1	0
Automatic control with deceleration (forward or reverse)			
Run	700	0	1
Soft stop	700	0	0

A1: Soft start/soft stop unit
QF1: Ultra controller-starter with reversing unit

Automatic control with AS-Interface communication module, without deceleration

Without reversing unit

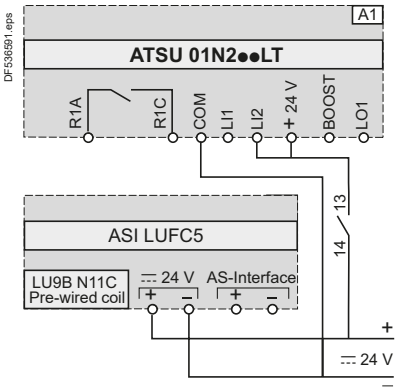

Function	Bit	Value
Power-up and automatic control without deceleration		
Run	D0	1
Stop	D0	0

A1: Soft start/soft stop unit

With reversing unit

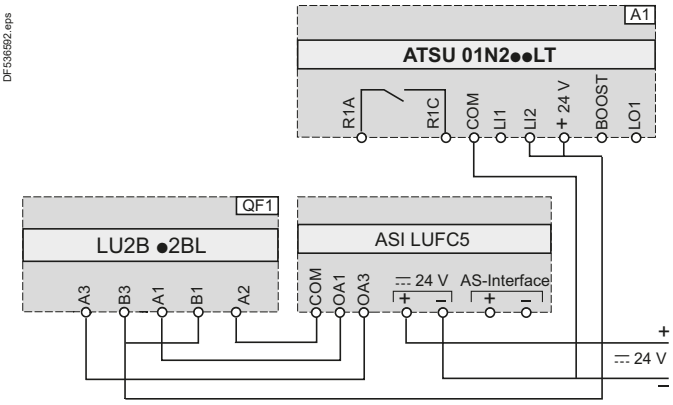

Function	Bit	Value
Power-up and automatic control without deceleration		
Run forward	D0	1
Stop	D0	0
Run reverse	D1	1
Stop	D1	0

A1: Soft start/soft stop unit
QF1: Ultra controller-starter with reversing unit

References: page A4/38
Characteristics: pages A4/77 and A4/78
Dimensions: page A4/79

Complementary technical information

Coordination between protection and control components

Type of information	Page
Types of coordination, according to the standard currents in the circuit to be considered	A5/2
Selection of the coordination type	A5/3

Suggested coordinated Direct-On-Line motor starter combinations

Fuses + Contactor + Overload relay	A5/4
Circuit breaker (with built in overload protection) + Contactor	A5/11
Circuit breaker + Contactor + Overload relay	A5/18

Suggested coordinated Star-delta motor starter combinations

Fuses + Contactors + Overload relay	A5/27
Circuit breaker (with built in overload protection) + Contactors	A5/31
Circuit breaker + Contactors + Overload relay	A5/36

Suggested coordinated TeSys island motor starter combinations

Protection Components / Starters - Coordination - IEC	A5/43
Protection Components / Starters - SCCR Ratings - UL	A5/50

Contactors: Utilisation categories – Standard characteristics – Selection tables per categorie

Definition: utilisation categories : AC-1, AC-2, AC-3, etc...	A5/51
Definition: contactor standard characteristics	A5/52
Contactor selection tables per utilisation categorie	A5/54

Contactors for specific application – Design information

Selection of contactors for lighting circuits	A5/68
Selection of contactors for heating circuits	A5/74
Selection of contactors for switching primaries of 3P LV/LV transformers	A5/76
Selection of contactors for switching 3P capacitor banks (factor correction)	A5/77
Selection of contactors auto-transformer starting	A5/78
Design of long distance remote control for contactors	A5/80
Current of asynchronous squirrel cage motors at nominal load	A5/84

Standards – Protection against contact – Protective treatments

International standards and certifications	A5/85
Protection against accidental direct contacts / IP codes	A5/87

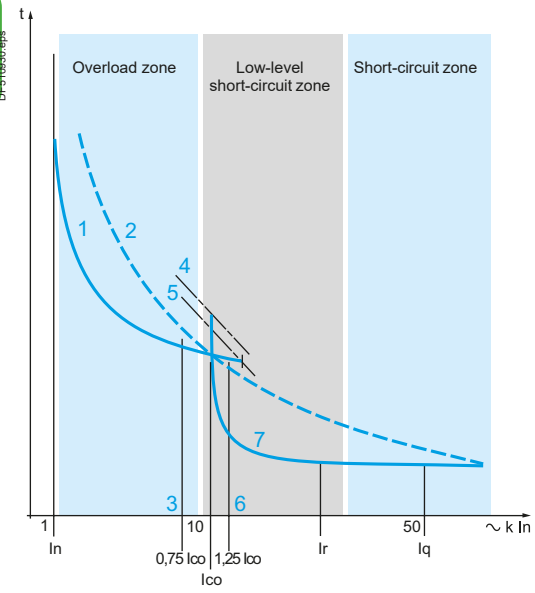

1 Thermal overload relay curve.
2 Fuse.
3 Tripping of thermal overload relay only.
4 Thermal limit of the circuit breaker.
5 Thermal overload relay limit.
6 Current broken by the SCPD (1).
7 Circuit breaker magnetic trip.

Type 1 and type 2 coordination according to the standard

The standard defines tests at different levels of current; the purpose of these tests is to place the equipment in extreme conditions.
The standard defines 2 types of coordination, according to the condition of the components after testing:
type 1,
type 2.
To determine the type of coordination, the standard requires that the behaviour of the equipment be tested under overload and short-circuit conditions for 3 fault current values, covering overload and short-circuit conditions.

Type 1 coordination

Type 1 coordination requires that in a short-circuit condition, the contactor or starter must not present any danger to personnel or installations and must not be able to resume operation without repair or the replacement of parts.

Type 2 coordination

Type 2 coordination requires that In a short-circuit condition, the contactor or starter must not present any danger to personnel or installations and must subsequently be able to resume operation. The risk of contact welding is permissible; in this case, the manufacturer must indicate measures to be taken regarding maintenance of the equipment.

Type 2 coordination increases reliability of operation.

Current values

Current “Ico” (overload I < 10 In)

The thermal overload relay associated with the contactor provides protection against this type of fault, up to a value Ico (see curve) defined by the manufacturer.

Standard IEC 60947-4-1 specifies the 2 current values to be used for checking coordination between the thermal overload relay and the short-circuit protection device:
- at 0.75 Ico only the thermal overload relay must trip,
- at 1.25 Ico the short-circuit protection device must operate.

Current “r” (low level short-circuit 10 < I < 50 In)

The main cause of this type of fault is the deterioration of insulating materials. Standard IEC 60947-4-1 defines an intermediate short-circuit current “r”. This test current makes it possible to check whether the protection device is providing protection against low-level short-circuits.

Operational current Ie (AC-3) (A)	**Current “r”** (kA)
Ie ⩽ 16	1
16 < Ie ⩽ 63	3
63 < Ie ⩽ 125	5
125 < Ie ⩽ 315	10
315 < Ie ⩽ 630	18
630 < Ie ⩽ 1000	30

Current “Iq” (short-circuit > current “r”)

This type of fault corresponds to a dead short and is relatively rare. It can be caused by a connection error during maintenance work. Short-circuit protection is provided by fast operating devices.

Standard IEC 60947-4-1 defines a current “Iq”. The coordination tables supplied by Schneider Electric are based on a current “Iq” that is generally ⩾ 50 kA.

(1) SCPD: short-circuit protection device.

Selection

No coordination

Considerable risks to both persons and equipment.

Not authorised by standards:
□ NF C 15-100 and IEC 60364-1, article 133-1
(installation regulations),
□ EN/IEC 60204-1, article 7
(electrical equipment in machines),
□ IEC 60947-4-1, article 8.2.5. (starters)

Type 1 coordination

The most frequently used solution.

■ Equipment costs are lower.
■ Reliability of operation is not a requirement.
■ Before restarting, it may be necessary to repair the motor starter.

Consequences:
□ significant amount of machine downtime,
□ skilled maintenance personnel required to repair, check, obtain supplies.

Example: air conditioning in commercial premises.

Type 2 coordination

This solution ensures reliability of operation.

Consequences:
□ reduced machine downtime,
□ reduced maintenance after a short-circuit.

Example: escalators.

Total coordination

With this solution, no damage or misadjustment is permissible and reliability of operation is guaranteed.

Consequences:
□ immediate return to service,
□ no special precautions required.

Examples: smoke extraction, fire-fighting pumps.

Coordination: Fuses (NFC, DIN type aM) + Contactor + Overload relay

0.06 to 55 kW at 400/415 V: type 1 coordination

Standard power ratings of 3-phase motors 50/60 Hz in category AC-3						Fuse carrier (1) (basic block)	aM fuses		Contactor	Thermal overload relay class 10	
400/415 V		440 V		500 V		Reference	Size	Rating	Reference (2)	Reference	Setting range
P	Ie	P	Ie	P	Ie						
kW	A	kW	A	kW	A			A			A
0.06	0.2	**0.06**	0.19	**–**	–	**LS1D32**	10 x 38	2	**LC1K06**	**LR2K0302**	0.16…0.23
–	–	**0.09**	0.28	**–**	–	**LS1D32**	10 x 38	2	**LC1K06**	**LR2K0303**	0.23…0.36
0.09	0.3	**–**	–	**–**	–						
0.12	0.44	**0.12**	0.37	**–**	–	**LS1D32**	10 x 38	2	**LC1K06**	**LR2K0304**	0.36…0.54
0.18	0.6	**0.18**	0.55	**–**	–						
–	–	**0.25**	0.76	**–**	–	**LS1D32**	10 x 38	2	**LC1K06**	**LR2K0305**	0.54…0.8
0.25	0.85	**–**	–	**–**	–						
0.37	1.1	**0.37**	1	**0.37**	0.88	**LS1D32**	10 x 38	2	**LC1K06**	**LR2K0306**	0.8…1.2
0.55	1.5	**0.55**	1.36	**0.55**	1.2						
–	–	**0.75**	1.68	**0.75**	1.5	LS1D32	10 x 38	2	**LC1K06**	**LR2K0307**	1.2…1.8
0.75	1.9	**–**	–	**1.1**	2.2						
1.1	2.7	**1.1**	2.37	**1.5**	2.9	**LS1D32**	10 x 38	4	**LC1K06**	**LR2K0308**	1.8…2.6
1.5	3.6	**1.5**	3.06	**–**	–	**LS1D32**	10 x 38	4	**LC1K06**	**LR2K0310**	2.6…3.7
2.2	4.9	**–**	–	**2.2**	3.9						
–	–	**–**	–	**3**	5.2	**LS1D32**	10 x 38	6	**LC1K06**	**LR2K0312**	3.7…5.5
–	–	**2.2**	4.42	**–**	–	**LS1D32**	10 x 38	8	**LC1K06**	**LR2K0312**	3.7…5.5
3	6.5	**3**	5.77	**4**	6.8	**LS1D32**	10 x 38	8	**LC1K09**	**LR2K0314**	5.5…8
4	8.5	**4**	7.9	**5.5**	9.2	**LS1D32**	10 x 38	12	**LC1K09**	**LR2K0316**	8…11.5

(1) For breaking under load, add a rotary switch-disconnector.
(2) For reversing operation, replace the prefix LC1 with LC2.

Coordination: Fuses (NFC, DIN type aM) + Contactor + Overload relay

0.06 to 55 kW at 400/415 V: type 1 coordination

Standard power ratings of 3-phase motors 50/60 Hz in category AC-3						Fuse carrier [1] (basic block)	aM fuses		Contactor	Thermal overload relay classe 10	
400/415 V		440 V		500 V		Reference	Size	Rating	Reference [2]	Reference	Setting range
P	Ie	P	Ie	P	Ie						
kW	A	kW	A	kW	A			A			A
5.5	11.5	**5.5**	10.4	**7.5**	12.4	**LS1D32**	10 x 38	16	**LC1K12**	**LR2K0321**	10…14
7.5	15.5	**7.5**	13.7	**9**	13.9	**LS1D32**	10 x 38	16	**LC1D18**	**LRD21**	12…18
–	–	**9**	16.9	**–**	–	**LS1D32**	10 x 38	20	**LC1D25**	**LRD21**	12…18
9	18.1	**–**	–	**11**	17.6						
11	22	**11**	20.1	**15**	23	**GK1EK**	14 x 51	25	**LC1D25**	**LRD22**	16…24
15	29	**15**	26.5	**18.5**	28	**GK1EK**	14 x 51	32	**LC1D32**	**LRD32**	23…32
18.5	35	**18.5**	32.8	**22**	33	**GK1EK**	14 x 51	40	**LC1D40A**	**LRD340**	30…40
22	41	**22**	39	**30**	44	**GS●J**	22 x 58	50	**LC1D50A**	**LRD350**	37…50
–	–	**30**	51.5	**–**	–	**GS●J**	22 x 58	80	**LC1D50A**	**LRD365**	48…65
–	–	**–**	–	**37**	53	**GS●J**	22 x 58	80	**LC1D65A**	**LRD365**	48…65
30	55	**37**	64	**–**	–	**GS●J**	22 x 58	80	**LC1D65A**	**LRD365**	48…65
–	–	**–**	–	**45**	64	**GS●J**	22 x 58	80	**LC1D80**	**LRD3361**	55…70
37 [3]	66	**45**	76	**–**	–	**GS●J**	22 x 58	100	**LC1D80**	**LRD3363**	63…80
45	80	**–**	–	**55**	78	**GS●J**	22 x 58	100	**LC1D95**	**LRD3365**	80…104
–	–	**55**	90	**–**	–	**GS●J**	22 x 58	125	**LC1D115**	**LRD4365**	80…104
55	97	**–**	–	**75**	106	**GS●J**	22 x 58	125	**LC1D115**	**LRD4367**	95…120

(1) For breaking under load, add a rotary switch-disconnector.
(2) For reversing operation, replace the prefix LC1 with LC2.
(3) 400 V maximum.

0.06 to 315 kW at 400/415 V: type 2 coordination

Standard power ratings of 3-phase motors 50/60 Hz in category AC-3						Switch-disconnector	aM fuses		Contactor	Thermal overload relay classe 10	
400/415 V		440 V		500 V		Reference (1)	Size	Rating	Reference (2)	Reference	Setting range
P	Ie	P	Ie	P	Ie						
kW	A	kW	A	kW	A			A			A
0.06	0.2	**0.06**	0.19	**–**	–	**GS1DD**	10 x 38	2	**LC1D09**	**LRD02**	0.16…0.25
–	–	**0.09**	0.28	**–**	–	**GS1DD**	10 x 38	2	**LC1D09**	**LRD03**	0.25…0.4
0.09 **0.12**	0.3 0.44	**–** **0.12**	– 0.37	**–** **–**	– –	**GS1DD**	10 x 38	2	**LC1D09**	**LRD04**	0.4…0.63
0.18 **–**	0.6 –	**0.18** **0.25**	0.55 0.76	**–** **–**	– –	**GS1DD**	10 x 38	2	**LC1D09**	**LRD05**	0.63…1
0.25 **0.37** **0.55**	0.85 1.1 1.5	**–** **0.37** **0.55**	– 1 1.36	**0.37** **0.55** **0.75**	0.88 1.2 1.5	**GS1DD**	10 x 38	2	**LC1D09**	**LRD06**	1…1.7
0.75 **–**	1.9 –	**0.75** **1.1**	1.68 2.37	**–** **1.1**	– 2.2	**GS1DD**	10 x 38	4	**LC1D09**	**LRD07**	1.6…2.5
1.1 **1.5**	2.7 3.6	**–** **1.5**	– 3.06	**1.5** **2.2**	2.9 3.9	**GS1DD**	10 x 38	4	**LC1D09**	**LRD08**	2.5…4
2.2	4.9	**2.2**	4.42	**3**	5.2	**GS1DD**	10 x 38	6	**LC1D09**	**LRD10**	4…6
3	6.5	**3**	5.77	**4**	6.8	**GS1DD**	10 x 38	8	**LC1D09**	**LRD12**	5.5…8
4	8.5	**4**	7.9	**5.5**	9.2	**GS1DD**	10 x 38	10	**LC1D09**	**LRD14**	7…10
5.5	11.5	**5.5**	10.4	**7.5**	12.4	**GS1DD**	10 x 38	16	**LC1D12**	**LRD16**	9…13
7.5	15.5	**7.5**	13.7	**9**	13.9	**GS1DD**	10 x 38	16	**LC1D18**	**LRD21**	12…18
–	–	**9**	16.9	**–**	–	**GS●F**	14 x 51	20	**LC1D25**	**LRD21**	12…18
9 **11**	18.1 22	**11** **–**	20.1 –	**11** **15**	17.6 23	**GS●F**	14 x 51	25	**LC1D25**	**LRD22**	16…24
15	29	**15**	26.5	**18.5**	28	**GS●F**	14 x 51	32	**LC1D32**	**LRD32**	23…32
18.5	35	**18.5**	32.8	**22**	33	**GS●F**	14 x 51	40	**LC1D40A**	**LRD340**	30…40
22	41	**22**	39	**30**	44	**GS●J**	22 x 58	50	**LC1D50A**	**LRD350**	37…50
–	–	**30**	51.5	**–**	–	**GS●J**	22 x 58	80	**LC1D65A**	**LRD365**	48…65
–	–	**–**	–	**37**	53	**GS●J**	22 x 58	80	**LC1D65A**	**LRD365**	48…65
30	55	**37**	64	**–**	–	**GS●J**	22 x 58	80	**LC1D65A**	**LRD365**	48…65
–	–	**–**	–	**45**	64	**GS●J**	22 x 58	80	**LC1D95**	**LRD3361**	55…70
37	66	**45**	76	**–**	–	**GS●J**	22 x 58	100	**LC1D80**	**LRD3363**	63…80
–	–	**–**	–	**55**	78	**GS●J**	22 x 58	100	**LC1D115**	**LR9D5367**	60…100
45	80	**–**	–	**–**	–	**GS●J**	22 x 58	100	**LC1D95**	**LRD3365**	80…104
55	97	**55**	90	**75**	106	**GS●L**	T0	125	**LC1D150**	**LR9D5369**	90…150
75	132	**75**	125	**90**	128	**GS●L**	T0	160	**LC1D150**	**LR9D5369**	90…150

(1) GS●: GS1 for direct operator or GS2 for external operator.
(2) For reversing operation, replace the prefix LC1 with LC2.

Coordination: Fuses (NFC, DIN type aM) + Contactor + Overload relay

55 to 335 kW at 400 V: type 2 coordination

Standard power ratings of 3-phase motors 50/60 Hz in category AC-3e			Switch-disconnector	aM fuses		Contactor	Thermal overload relay	
400 V			Product type	Size	Rating	Product type	Product type	Ir setting (1)
P	Ie	Iq (max)						
kW	A	kA			A			A
55	97	80	GS●L	0	125	LC1G115	LR9G115	97
75	132	80	GS●L	0	160	LC1G150	LR9G225	132
90	160	80	GS●N	1	200	LC1G185	LR9G225	160
110	195	80	GS●N	1	250	LC1G225	LR9G225	195
132	230	80	GS●QQ	2	315	LC1G265	LR9G500	230
160	280	80	GS●QQ	2	400	LC1G330	LR9G500	280
200	350	80	GS2S	3	500	LC1G400	LR9G500	350
220	380	80	GS2S	3	500	LC1G500	LR9G500	380
250	430	80	GS2S	3	500	LC1G500	LR9G500	430
315	540	80	GS2S	3	630	LC1G630 (2)	LR9G630	540
335	575	80	GS2V	4	800	LC1G630 (2)	LR9G630	575

75 to 400 kW at 440 V: type 2 coordination

Standard power ratings of 3-phase motors 50/60 Hz in category AC-3e			Switch-disconnector	aM fuses		Contactor	Thermal overload relay	
440 V			Product type	Size	Rating	Product type	Product type	Ir setting (1)
P	Ie	Iq (max)						
kW	A	kA			A			A
75	115	80	GS●L	0	125	LC1G115	LR9G115	115
90	145	80	GS●L	0	160	LC1G150	LR9G225	145
110	177	80	GS●N	1	200	LC1G185	LR9G225	177
132	209	80	GS●N	1	250	LC1G225	LR9G225	209
160	255	80	GS●QQ	2	315	LC1G265	LR9G500	255
200	318	80	GS●QQ	2	400	LC1G330	LR9G500	318
220	343	80	GS2S	3	500	LC1G400	LR9G500	343
250	390	80	GS2S	3	500	LC1G500	LR9G500	390
315	505	80	GS2S	3	500	LC1G500	LR9G500	505
355	554	80	GS2S	3	630	LC1G630 (2)	LR9G630	554
400	627	80	GS2V	4	800	LC1G630 (2)	LR9G630	627

65 to 375 kW at 500 V: type 2 coordination

Standard power ratings of 3-phase motors 50/60 Hz in category AC-3e			Switch-disconnector	aM fuses		Contactor	Thermal overload relay	
500 V			Product type	Size	Rating	Product type	Product type	Ir setting (1)
P	Ie	Iq (max)						
kW	A	kA			A			A
65	92	80	GS●L	0	125	LC1G115	LR9G115	92
90	128	80	GS●L	0	160	LC1G150	LR9G225	128
110	156	80	GS●N	1	200	LC1G185	LR9G225	156
132	184	80	GS●N	1	250	LC1G225	LR9G225	184
160	224	80	GS●QQ	2	315	LC1G265	LR9G500	224
200	280	80	GS●QQ	2	400	LC1G330	LR9G500	280
250	344	80	GS2S	3	500	LC1G400	LR9G500	344
295	405	80	GS2S	3	500	LC1G500	LR9G500	405
375	516	80	GS2S	3	630	LC1G630	LR9G630	516

(1) This setting is a general guidance, Ir should be adjusted according to motor characteristics and conditions of use.
(2) Available mid-2022.

Coordination: Fuses (NFC, DIN type aM) + Contactor + Overload relay

0.75 to 400 kW at 690 V: type 2 coordination

Standard power ratings of 3-phase motors 50/60 Hz in category AC-3		Switch-disconnector	aM fuses		Contactor	Thermal overload relay classe 10	
P	Ie	Reference (1)	Size	Rating	Reference (2)	Reference	Setting range
kW	A			A			A
0.75	1.1	GS●F	14 x 51	2	LC1D09	LRD06	1…1.6
1.1	1.6	GS●F	14 x 51	2	LC1D09	LRD06	1…1.6
1.5	2.1	GS●F	14 x 51	4	LC1D09	LRD07	1.6…2.5
2.2	2.8	GS●F	14 x 51	4	LC1D09	LRD08	2.5…4
3	3.8	GS●F	14 x 51	6	LC1D09	LRD08	2.5…4
4	4.9	GS●F	14 x 51	6	LC1D09	LRD10	4…6
5.5	6.7	GS●F	14 x 51	8	LC1D09	LRD12	5.5…8
7.5	8.9	GS●F	14 x 51	10	LC1D25	LRD16	9…13
11	12.8	GS●F	14 x 51	16	LC1D25	LRD16	9…13
15	17	GS●F	14 x 51	20	LC1D25	LRD22	16…24
18.5	21	GS●F	14 x 51	25	LC1D32	LRD22	16…24
22	24	GS●J	22 x 58	32	LC1D40A	LRD332	23…32
30	32	GS●J	22 x 58	40	LC1D40A	LRD340	30…40
37	39	GS●J	22 x 58	50	LC1D65A	LRD350	37…50
45	47	GS●J	22 x 58	63	LC1D80	LRD3357	37…50
55	57	GS●J	22 x 58	80	LC1D115	LRD3359	48…65
75	77	GS●KK	T00	100	LC1D115	LRD3363	63…80
90	93	GS●KK	T00	125	LC1D150	LR9D5369	90…150

55 to 500 kW at 690 V: type 2 coordination

Standard power ratings of 3-phase motors 50/60 Hz in category AC-3e			Switch-disconnector	aM fuses		Contactor	Thermal overload relay	
690 V			Product type	Size	Rating	Product type	Product type	Ir setting (3)
P	Ie	Iq (max)						
kW	A	kA			A			A
55	57	80	GS●J	22 x 58	80	LC1G115	LR9G225	57
75	77	80	GS●KK	0	100	LC1G115	LR9G225	77
90	93	80	GS●KK	0	125	LC1G150	LR9G225	93
110	113	80	GS●KK	0	160	LC1G185	LR9G225	113
132	134	80	GS●L	0	160	LC1G225	LR9G225	134
160	162	80	GS●N	1	200	LC1G225	LR9G225	162
200	203	80	GS●N	1	250	LC1G265	LR9G500	203
220	223	80	GS●QQ	2	250	LC1G330	LR9G500	223
250	250	80	GS●QQ	2	315	LC1G330	LR9G500	250
315	313	80	GS●QQ	2	400	LC1G400	LR9G500	313
355	354	80	GS●QQ	3	500	LC1G500	LR9G500	354
500	493	80	GS●S	3	630	LC1G630	LR9G630	493

(1) GS●: GS1 for direct operator or GS2 for external operator.
(2) For reversing operation, replace the prefix LC1 with LC2.
(3) This setting is a general guidance, Ir should be adjusted according to motor characteristics and conditions of use.

Coordination: Fuses (NFC, DIN type aM) + Contactor + Electronic overload relay

0.18 to 55 kW at 400/415 V: type 2 coordination

Standard power ratings of 3-phase motors 50/60 Hz in category AC-3						Switch-disconnector	aM fuses		Contactor	Electronic thermal overload relay	
400/415 V			690 V			Reference	Size	Rating	Reference	Reference	Setting range
P	Ie	Iq	P	Ie	Iq						
kW	A	kA	kW	A	kA			A			A
0.18	0.6	100	**–**	–	–	**GS1DD**	10 x 38	2	**LC1D09**	**LR9D02**	0.4…2.0
0.25	0.85	100	**–**	–	–	**GS1DD**	10 x 38	2	**LC1D09**	**LR9D02**	0.4…2.0
0.37	1.1	100	**–**	–	–	**GS1DD**	10 x 38	2	**LC1D09**	**LR9D02**	0.4…2.0
0.55	1.5	100	**–**	–	–	**GS1DD**	10 x 38	2	**LC1D09**	**LR9D02**	0.4…2.0
0.75	1.9	100	**–**	–	–	**GS1DD**	10 x 38	4	**LC1D09**	**LR9D02**	0.4…2.0
1.1	2.7	100	**–**	–	–	**GS1DD**	10 x 38	4	**LC1D18**	**LR9D08**	1.6…8.0
1.5	3.6	100	**–**	–	–	**GS1DD**	10 x 38	4	**LC1D18**	**LR9D08**	1.6…8.0
2.2	4.9	100	**–**	–	–	**GS1DD**	10 x 38	6	**LC1D18**	**LR9D08**	1.6…8.0
3	6.5	100	**–**	–	–	**GS1DD**	10 x 38	8	**LC1D18**	**LR9D32**	6.4…32
4	8.5	100	**–**	–	–	**GS1DD**	10 x 38	10	**LC1D18**	**LR9D32**	6.4…32
5.5	11.5	100	**–**	–	–	**GS1DD**	10 x 38	16	**LC1D25**	**LR9D32**	6.4…32
7.5	15.5	50	**–**	–	–	**GS1DD**	10 x 38	16	**LC1D25**	**LR9D32**	6.4…32
11	22	50	**–**	–	–	**GS●F**	14 x 51	25	**LC1D25**	**LR9D32**	6.4…32
15	29	50	**–**	–	–	**GS●J**	22 x 58	32	**LC1D65A**	**LR9D110S**	22…110
18.5	35	50	**–**	–	–	**GS●J**	22 x 58	40	**LC1D65A**	**LR9D110S**	22…110
22	41	50	**–**	–	–	**GS●J**	22 x 58	50	**LC1D65A**	**LR9D110S**	22…110
45 (1)	80	100	**–**	–	–	**GS●N**	T 1	100	**LC1D150**	**LR9D110S**	22…110
55 (1)	97	100	**–**	–	–	**GS●N**	T 1	125	**LC1D150**	**LR9D110S**	22…110
–	–	–	**0.37**	0.64	100	**GS●F**	14 x 51	2	**LC1D09**	**LR9D02**	0.4…2.0
–	–	–	**0.55**	0.87	100	**GS●F**	14 x 51	2	**LC1D09**	**LR9D02**	0.4…2.0
–	–	–	**0.75**	1.1	100	**GS●F**	14 x 51	2	**LC1D09**	**LR9D02**	0.4…2.0
–	–	–	**1.1**	1.6	100	**GS●F**	14 x 51	2	**LC1D25**	**LR9D08**	1.6…8.0
–	–	–	**1.5**	2.1	100	**GS●F**	14 x 51	4	**LC1D25**	**LR9D08**	1.6…8.0
–	–	–	**2.2**	2.8	100	**GS●F**	14 x 51	4	**LC1D25**	**LR9D08**	1.6…8.0
–	–	–	**3**	4	100	**GS●F**	14 x 51	6	**LC1D25**	**LR9D08**	1.6…8.0
–	–	–	**4**	5	100	**GS●F**	14 x 51	6	**LC1D25**	**LR9D08**	1.6…8.0
–	–	–	**5.5**	7	50	**GS●F**	14 x 51	8	**LC1D25**	**LR9D32**	6.4…32
–	–	–	**7.5**	8.9	50	**GS●F**	14 x 51	10	**LC1D25**	**LR9D32**	6.4…32
–	–	–	**11**	13	50	**GS●F**	14 x 51	16	**LC1D32**	**LR9D32**	6.4…32
–	–	–	**15**	16.5	50	**GS●F**	14 x 51	20	**LC1D32**	**LR9D32**	6.4…32
–	–	–	**18.5**	21	100	**GS●F**	14 x 51	25	**LC1D95**	**LR9D32**	6.4…32
–	–	–	**18.5**	21	50	**GS●F**	14 x 51	25	**LC1D65A**	**LR9D32**	6.4…32
–	–	–	**22**	25	50	**GS●F**	14 x 51	32	**LC1D65A**	**LR9D32**	6.4…32
–	–	–	**30**	33	100	**GS●F**	14 x 51	40	**LC1D95**	**LR9D110**	22…110
–	–	–	**37**	40	100	**GS●F**	14 x 51	50	**LC1D95**	**LR9D110**	22…110
–	–	–	**45**	49	100	**GS●J**	22 x 58	63	**LC1D95**	**LR9D110**	22…110

(1) Ratings valid up to 400 V AC only.

Coordination: Fuses (BS) + Contactor + Overload relay

0.06 to 375 kW at 415 V: type 2 coordination

Standard power ratings of 3-phase motors 50/60 Hz in category AC-3						Switch-disconnector-fuse	BS fuses		Contactor	Thermal overload relay	
415 V		440 V		500 V		Reference	Size	Rating	Reference (1)	Reference	Setting range
P	Ie	P	Ie	P	Ie						
kW	A	kW	A	kW	kA			A			A
0.06	0.22	**0.06**	0.19	**–**	–	**GS1DDB**	A1	NIT 2	**LC1D09**	**LRD02**	0.16…0.25
–	–	**0.09**	0.28	**–**	–	**GS1DDB**	A1	NIT 2	**LC1D09**	**LRD03**	0.25…0.4
0.09	0.36	**–**	–	**–**	–						
0.12	0.42	**0.12**	0.37	**–**	–	**GS1DDB**	A1	NIT 2	**LC1D09**	**LRD04**	0.4…0.63
0.18	0.6	**0.18**	0.55	**–**	–	**GS1DDB**	A1	NIT 2	**LC1D09**	**LRD05**	0.63…1
–	–	**0.25**	0.76	**–**	–	**GS1DDB**	A1	NIT 4	**LC1D09**	**LRD05**	0.63…1
0.25	0.88	**0.37**	1	**0.37**	1						
0.37	1	**0.55**	1.36	**0.55**	1.2						
0.55	1.5	**0.75**	1.68	**0.75**	1.5	**GS1DDB**	A1	NIT 6	**LC1D09**	**LRD06**	1…1.7
0.75	2	**–**	–	**–**	–	**GS1DDB**	A1	NIT 10	**LC1D09**	**LRD07**	1.6…2.5
–	–	**–**	–	**1.5**	2.6	**GS1DDB**	A1	NIT 10	**LC1D09**	**LRD08**	2.5…4
1.5	3.5	**1.5**	3.06	**2.2**	3.8	**GS1DDB**	A1	NIT 16	**LC1D09**	**LRD08**	2.5…4
2.2	5	**2.2**	4.42	**3**	5	**GS1DDB**	A1	NIT 16	**LC1D09**	**LRD10**	4…6
3	6.5	**3**	5.77	**4**	6.5	**GS1DDB**	A1	NIT 20	**LC1D09**	**LRD12**	5.5…8
4	8.4	**4**	7.9	**5.5**	9	**GS1DDB**	A1	NIT 20	**LC1D09**	**LRD14**	7…10
5.5	11	**5.5**	10.4	**7.5**	12	**GS1DDB**	A1	NIT 20M25	**LC1D12**	**LRD16**	9…13
7.5	14	**7.5**	13.7	**9**	13.9	**GS1DDB**	A1	NIT 20M32	**LC1D18**	**LRD21**	12…18
9	18.1	**9**	16.9	**–**	–	**GS2GB**	A2	TIA 32M35	**LC1D18**	**LRD21**	12…18
11	21	**11**	20	**11**	18.4						
–	–	**–**	–	**15**	23	**GS2GB**	A2	TIA 32M50	**LC1D25**	**LRD22**	16…24
15	28.5	**15**	26.5	**–**	–	**GS2GB**	A2	TIA 32M63	**LC1D32**	**LRD32**	23…32
18.5	35	**18.5**	32.8	**–**	–	**GS2GB**	A3	TIS 63M80	**LC1D40A**	**LRD340**	25…40
22	41	**22**	39	**–**	–	**GS2GB**	A3	TIS 63M80	**LC1D50A**	**LRD350**	37…50
30	55	**30**	51.5	**–**	–	**GS2GB**	A3	TIS 63M100	**LC1D65A**	**LRD365**	48…65
–	–	**37**	64	**–**	–	**GS2GB**	A3	TIS 63M100	**LC1D65A**	**LRD365**	48…65
–	–	**45**	76	**45**	65	**GS2LLB**	A4	TCP 100M125	**LC1D80**	**LRD3363**	63…80
45	81	**–**	–	**55**	80	**GS2LLB**	A4	TCP 100M125	**LC1D95**	**LRD3365**	80…104
55	100	**–**	–	**–**	–	**GS2LLB**	A4	TCP 100M160	**LC1D115**	**LR9D5369**	90…150
–	–	**55**	90	**–**	–	**GS2LLB**	A4	TCP 100M160	**LC1D115**	**LR9D5367**	60…100
–	–	**–**	–	**80**	116	**GS2LB**	B2	TF 200	**LC1D150**	**LR9D5369**	90…150
80	138	**80**	132	**–**	–	**GS2LB**	B2	TF 200M250	**LC1D150**	**LR9D5369**	90…150

(1) For reversing operation, replace the prefix LC1 with LC2.

Coordination: Thermal magnetic circuit breaker + Contactor

0.06 to 250 kW at 400/415 V: type 1 coordination

Standard power ratings of 3-phase motors 50/60 Hz in category AC-3									Circuit breaker		Contactor
400/415 V			440 V			500 V			Reference *References in italics are available in CEE zone only*	Setting range of thermal trips	Reference (2)
P	Ie	Iq (1)	P	Ie	Iq (1)	P	Ie	Iq (1)			
kW	A	kA	kW	A	kA	kW	A	kA		A	
0.06	0.2	50	**0.06**	0.19	50	–	–	–	**GV2ME02** *GV2ME02AP*	0.16…0.25	**LC1K06** or **LC1D09**
0.09	0.3	50	**0.09** **0.12**	0.28 0.37	50 50	–	–	–	**GV2ME03** *GV2ME03AP*	0.25…0.40	**LC1K06** or **LC1D09**
0.12 **0.18**	0.44 0.6	50 50	– **0.18**	– 0.55	– 50	– –	– –	– –	**GV2ME04** *GV2ME04AP*	0.40…0.63	**LC1K06** or **LC1D09**
0.25 **0.37**	0.85 1.1	50 50	**0.25** **0.37**	0.76 0.99	50 50				**GV2ME05** *GV2ME05AP*	0.63…1	**LC1K06** or **LC1D09**
– **0.55**	– 1.5	– 50	– **0.55**	– 1.36	– 50	**0.37** **0.55**	0.88 1.2	50 50	**GV2ME06** *GV2ME06AP*	1…1.6	**LC1K06** or **LC1D09**
–	–	–	–	–	–	**0.75**	1.5	50	**GV2ME06** *GV2ME06AP*	1…1.6	**LC1K06** or **LC1D09**
0.75 –	1.9 –	50 –	**0.75** **1.1**	1.68 2.37	50 50	– **1.1**	– 2.2	– 50	**GV2ME07** *GV2ME07AP*	1.6….2.5	**LC1K06** or **LC1D09**
1.1 **1.5**	2.7 3.6	50 50	– **1.5**	– 3.06	– 50	**1.5** **2.2**	2.9 3.9	50 50	**GV2ME08** *GV2ME08AP*	2.5…4	**LC1K06** or **LC1D09**
2.2 –	4.9 –	50 –	**2.2** **3**	4.42 5.77	50 50	– **3**	– 5.2	– 50	**GV2ME10** *GV2ME10AP*	4…6.3	**LC1K06** or **LC1D09**
3 **4**	6.5 8.5	50 50	– **4**	– 7.9	– 15	**4** **5.5**	6.8 9.2	10 10	**GV2ME14** *GV2ME14AP*	6…10	**LC1K09** or **LC1D09**
5.5	11.5	15	**5.5**	10.4	8	**7.5**	12.4	6	**GV2ME16** *GV2ME16AP*	9…14	**LC1K12** or **LC1D12**
7.5 –	15.5 –	15 –	**7.5** **9**	13.7 16.9	8 8	**9** –	13.9 –	6 –	**GV2ME20** *GV2ME20AP*	13…18	**LC1D18**
9	18.1	15	**11**	20.1	6	**11**	17.6	4	**GV2ME21** *GV2ME21AP*	17…23	**LC1D25**
11	22	15	–	–	–	**15**	23	4	**GV2ME22** *GV2ME22AP*	20…25	**LC1D25**
15	29	10	**15**	26.5	6	**18.5**	28	4	**GV2ME32** *GV2ME32AP*	24…32	**LC1D32**
18.5	35	50	**18.5**	32.8	50	**22**	33	10	**GV3P40**	30…40	**LC1D40A**
22	41	50	**22**	39	50	**30**	44	10	**GV3P50**	37…50	**LC1D50A**
30	55	50	**30**	51.5	50	**37**	53	10	**GV3P65**	48…65	**LC1D65A**
37	66	50	–	–	–	–	–	–	**GV3P73**	62...73	**LC1D80A**
–	–	–	**37**	64	70	**45**	64	30	**GV4P80**	40…80	**LC1D65A**
37	66	100	**45**	76	70	**55**	78	30	**GV4P80**	40…80	**LC1D80**
45	80	100	–	–	–	–	–	–	**GV4P115**	65...115	**LC1D95**
55	97	100	**55**	90	70	**75**	106	30	**GV4P115**	65...115	**LC1D115**
75	132	36	**75**	125	35	**90**	128	30	**GV5P150F**	70...150	**LC1D150**
–	–	–	**90**	146	35	–	–	–	(3)	–	(3)
90	160	36	–	–	–	**110**	156	30	(3)	–	(3)
110	195	36	–	–	–	–	–	–	(3)	–	(3)
160	280	36	**318**	280	35	–	–	–	(3)	–	(3)
–	–	–	–	–	–	**220**	308	30	(3)	–	(3)
200	350	36	**220**	318	35	–	–	–	(3)	–	(3)
250	430	36	**250**	401	35	**335**	460	30	(3)	–	(3)

*(1) The breaking performance of circuit breakers **GV2ME** can be increased by adding a current limiter **GV1L3**.*
(2) For reversing operation, replace the prefix LC1 with LC2.
(3) Please consult your regional sales office.

Coordination: Thermal magnetic circuit breaker + Contactor

0.06 to 250 kW at 400/415 V: type 2 coordination

Standard power ratings of 3-phase motors 50/60 Hz in categ or y AC-3									Circuit breaker		Contactor
400/415 V			440 V			500 V			Reference *References in italics are available in CEE zone only*	Setting range of thermal trips	Reference (2)
P	Ie	Iq (1)	P	Ie	Iq (1)	P	Ie	Iq (1)			
kW	A	kA	kW	A	kA	kW	A	kA		A	
0.06	0.2	130	**0.06**	0.19	130	–	–	–	**GV2P02** or **GV2ME02** or *GV2ME02AP*	0.16…0.25	**LC1D09**
–	–	–	**0.09**	0.28	130	–	–	–	**GV2P03** or **GV2ME03** or *GV2ME03AP*	0.25…0.4	**LC1D09**
0.09	0.3	130	**0.12**	0.37	130	–	–	–			
0.12	0.44	130	–	–	–	–	–	–	**GV2P04** or **GV2ME04** or *GV2ME04AP*	0.4…0.63	**LC1D09**
0.18	0.6	130	**0.18**	0.55	130	–	–	–			
0.25	0.85	130	**0.25**	0.76	130	–	–	–	**GV2P05** or **GV2ME05** or *GV2ME05AP*	0.63…1	**LC1D09**
0.37	1.1	130	**0.37**	0.99	130	–	–	–			
–	–	–	–	–	–	**0.37**	0.88	130	**GV2P06** or **GV2ME06** or *GV2ME06AP*	1…1.6	**LC1D09**
0.55	1.5	130	**0.55**	1.36	130	**0.55**	1.2	130			
–	–	–	–	–	–	**0.75**	1.5	130	**GV2P06** or **GV2ME06** or *GV2ME06AP*	1…1.6	**LC1D09**
0.75	1.9	130	**0.75**	1.68	130	–	–	–	**GV2P07** or **GV2ME07** or *GV2ME07AP*	1.6…2.5	**LC1D09**
–	–	–	**1.1**	2.37	130	**1.1**	2.2	130			
1.1	2.7	130	–	–	–	**1.5**	2.9	130	**GV2P08** or **GV2ME08** or *GV2ME08P*	2.5…4	**LC1D09**
1.5	3.6	130	**1.5**	3.06	130	**2.2**	3.9	130			
–	–	–	–	–	–	–	–	–	**GV2P10** or **GV2ME10** or *GV2ME10AP*	4…6.3	**LC1D09**
2.2	4.9	130	–	–	–	–	–	–			
–	–	–	**2.2**	4.42	50	–	–	–	**GV2ME10** or *GV2ME10AP*	4…6.3	**LC1D09**
–	–	–	**3**	5.77	50	**3**	5.2	50			
–	–	–	**2.2**	4.42	130	–	–	–	**GV2P10**	4…6.3	**LC1D09**
–	–	–	**3**	5.77	130	**3**	5.2	130			
3	6.5	130	–	–	–	–	–	–	**GV2P14** or **GV2ME14** or *GV2ME14AP*	6…10	**LC1D09**
4	8.5	130	–	–	–	–	–	–			
–	–	–	**4**	7.9	15	**4**	6.8	10	**GV2ME14** or *GV2ME14AP*	6…10	**LC1D09**
–	–	–	–	–	–	**5.5**	9.2	10			
–	–	–	–	–	–	**4**	6.8	50	**GV2P14**	6…10	**LC1D12**
–	–	–	**4**	7.9	130	**5.5**	9.2	50			
5.5	11.5	130	**5.5**	10.4	50 or 8	**7.5**	12.4	42 or 6	**GV2P16** or **GV2ME16** or *GV2ME16AP*	9…14	**LC1D25**
–	–	–	**7.5**	13.7	50 or 8	**9**	13.9	42 or 6			
7.5	15.5	50 or 15	**9**	16.9	20 or 8	–	–	–	**GV2P20** or **GV2ME20** or *GV2ME20AP*	13…18	**LC1D25**
9	18.1	50 or 15	**11**	20.1	20 or 8	**11**	17.6	10 or 6	**GV2P21** or **GV2ME21** or *GV2ME21AP*	17…23	**LC1D25**
11	22	50 or 15	–	–	–	–	–	–	**GV2P22** or **GV2ME22** or *GV2ME22AP*	20…25	**LC1D25**
–	–	–	–	–	–	**15**	23	10 or 6	**GV2P22**	20…25	**LC1D32**
15	29	50 or 10	**15**	26.5	20 or 6	**18.5**	28	10 or 4	**GV2P32** or **GV2ME32** or *GV2ME32AP*	24…32	**LC1D32**
18.5	35	50	–	–	–	–	–	–	**GV3P40**	30…40	**LC1D50A**
–	–	–	**18.5**	32.8	50	**22**	33	10	**GV3P40**	30…40	**LC1D65A**
22	41	50	–	–	–	–	–	–	**GV3P50**	37…50	**LC1D50A**
–	–	–	**22**	39	50	**30**	44	10	**GV3P50**	37…50	**LC1D65A**
30	55	50	**30**	51.5	50	–	–	–	**GV3P65**	48…65	**LC1D65A**
–	–	–	–	–	–	**37**	53	10	**GV3P65**	48…65	**LC1D65A**
37	66	50	–	–	–	–	–	–	**GV3P73**	62...73	**LC1D80A**
–	–	–	**37**	64	70	–	–	–	**GV4P80**	40…80	**LC1D65A**
37	66	100	**45**	76	70	(3)	(3)	(3)	**GV4P80**	40…80	**LC1D80**
45	80	100	**55**	90	70	(3)	(3)	(3)	**GV4P115**	65 …115	**LC1D115**
55	97	100	–	–	–	(3)	(3)	(3)			
75	132	70	**75**	125	65	–	–	–	**GV5P150H**	70...150	**LC1D150**
			90	146	65	–	–	–			

*(1) The breaking performance of circuit breakers **GV2P** can be increased by adding a current limiter **GV1L3**.*
*(2) Combinations with circuit breaker **GV2ME** are type 2 coordinated only at 400/415 V and 440 V.*
(3) Please consult your regional sales office.

45 to 250 kW at 400 V: type 2 coordination (with TeSys GV4 / GV5 / GV6 circuit breakers)

Standard power ratings of 3-phase motors 50/60 Hz in category AC-3e			Circuit breaker			Contactor
400 V			Product type (1)	Ir setting (2)	Irm (2)	Product type
P	Ie	Iq (max)				
kW	A	kA		A	A	
45	80	100	GV4P/GV4PE/GV4PEM115●	86	1118	LC1G115
55	97	100	GV4P/GV4PE/GV4PEM115●	100	1300	LC1G115
55	97	70	GV5P150●	100	1300	LC1G115
75	132	70	GV5P150●	140	1820	LC1G150
90	160	70	GV5P220●	170	2210	LC1G185
110	195	70	GV5P220●	200	2600	LC1G225
110	195	70	GV6P320●	200	2600	LC1G265
132	230	70	GV6P320●	240	3120	LC1G265
160	280	70	GV6P320●	300	3900	LC1G330
200	350	70	GV6P500●	380	4940	LC1G400
220	380	70	GV6P500●	400	5200	LC1G500
250	430	70	GV6P500●	440	5720	LC1G500

(1) Product type to be completed by replacing the ● with the breaking performance code:

Rated conditional short-circuit (kA)	GV4P/GV4PE/GV4PEM115●			GV5P150●/ 220● GV6P320●/ 500●	
Breaking performance code	B	N	S	F	H
400 V	25	50	100	36	70

45 to 450 kW at 400 V: type 2 coordination (with ComPact NSX / NS circuit breakers)

Standard power ratings of 3-phase motors 50/60 Hz in category AC-3e			Circuit breaker			Contactor
400 V			Product type (1)	Ir setting (2)	Irm (2)	Product type
P	Ie	Iq (max)				
kW	A	kA		A	A	
45	80	130	NSX100● + MicroLogic 2.2 M	86	1105	LC1G115
55	97	130	NSX160● + MicroLogic 2.2 M (3)	100	1300	LC1G115
75	132	130	NSX160● + MicroLogic 2.2 M (3)	140	1820	LC1G150
90	160	130	NSX250● + MicroLogic 2.2 M (3)	170	2210	LC1G185
110	195	130	NSX250● + MicroLogic 2.2 M (3)	200	2600	LC1G225
110	195	130	NSX400● + MicroLogic 2.3 M (3)	200	2600	LC1G265
132	230	130	NSX400● + MicroLogic 2.3 M (3)	240	3120	LC1G265
160	280	130	NSX400● + MicroLogic 2.3 M (3)	300	3900	LC1G330
200	350	130	NSX630● + MicroLogic 2.3 M (3)	380	4940	LC1G400
220	380	130	NSX630● + MicroLogic 2.3 M (3)	400	5200	LC1G500
250	430	130	NSX630● + MicroLogic 2.3 M (3)	440	5720	LC1G500
300	460	130	NS800● + MicroLogic 5.0	470	6110	LC1G630
335	575	130	NS800● + MicroLogic 5.0	640	8320	LC1G630
355	610	130	NS800● + MicroLogic 5.0	640	8320	LC1G800
400	690	130	NS800● + MicroLogic 5.0	720	9360	LC1G800
450	770	130	NS1000● + MicroLogic 5.0	784	10192	LC1G800

(1) Product type to be completed by replacing the ● with the breaking performance code:

Rated conditional short-circuit (kA)	NSX100●/ NSX160● / NSX250●/ NSX400●/ NSX630●					NS800●/ NS1000●
Breaking performance code	F	N	H	S	L	L
400 V	36	50	70	100	130	150

(2) This setting is a general guidance, Ir and Irm should be adjusted according to motor characteristics and conditions of use.
(3) Applicable also with MicroLogic 6.2 E-M and 6.3 E-M trip units.

55 to 300 kW at 440 V: type 2 coordination (with TeSys GV4 / GV5 / GV6 circuit breakers)

Standard power ratings of 3-phase motors 50/60 Hz in category AC-3e			Circuit breaker			Contactor
440 V			Product type [1]	Ir setting [2]	Irm [2]	Product type
P	Ie	Iq (max)				
kW	A	kA		A	A	
55	88	70	GV4P/GV4PE/GV4PEM115●	93	1209	LC1G115
55	88	65	GV5P150●	90	1170	LC1G115
75	120	65	GV5P150●	130	1690	LC1G150
90	145	65	GV5P150●	150	1950	LC1G150
110	177	65	GV5P220●	185	2405	LC1G185
132	209	65	GV5P220●	210	2730	LC1G225
160	255	65	GV6P320●	260	3380	LC1G265
200	318	65	GV6P320●	320	4160	LC1G330
220	343	65	GV6P500●	350	4550	LC1G400
250	390	65	GV6P500●	400	5200	LC1G400
300	466	65	GV6P500●	470	6580	LC1G500

(1) Product type to be completed by replacing the ● with the breaking performance code:

Rated conditional short-circuit (kA)	GV4P/GV4PE/GV4PEM115●			GV5P150●/ 220●		GV6P320●/ 500●	
Breaking performance code	B	N	S	F	H	F	H
440 V	20	50	70	35	65	30	65

55 to 450 kW at 440 V: type 2 coordination (with ComPact NSX / NS circuit breakers)

Standard power ratings of 3-phase motors 50/60 Hz in category AC-3e			Circuit breaker			Contactor
440 V			Product type [1]	Ir setting [2]	Irm [2]	Product type
P	Ie	Iq (max)				
kW	A	kA		A	A	
55	88	130	NSX100● + MicroLogic 2.2 M	90	1170	LC1G115
75	120	130	NSX160● + MicroLogic 2.2 M [3]	130	1690	LC1G150
90	145	130	NSX160● + MicroLogic 2.2 M [3]	150	1950	LC1G150
110	177	130	NSX250● + MicroLogic 2.2 M [3]	185	2405	LC1G185
132	209	130	NSX250● + MicroLogic 2.2 M [3]	210	2730	LC1G225
160	255	130	NSX400● + MicroLogic 2.3 M [3]	260	3380	LC1G265
200	318	130	NSX400● + MicroLogic 2.3 M [3]	320	4160	LC1G330
220	343	130	NSX630● + MicroLogic 2.3 M [3]	350	4550	LC1G400
250	390	130	NSX630● + MicroLogic 2.3 M [3]	400	5200	LC1G400
300	466	130	NSX630● + MicroLogic 2.3 M [3]	470	6110	LC1G500
335	521	130	NS800● + MicroLogic 5.0	560	7280	LC1G630
355	554	130	NS800● + MicroLogic 5.0	560	7280	LC1G630
400	627	130	NS800● + MicroLogic 5.0	640	8320	LC1G800
450	695	130	NS800● + MicroLogic 5.0	720	9360	LC1G800

(1) Product type to be completed by replacing the ● with the breaking performance code:

Rated conditional short-circuit (kA)	NSX100●/ NSX160●/ NSX250●					NSX400●/ NSX630●					NS800●
Breaking performance code	F	N	H	S	L	F	N	H	S	L	L
440 V	35	50	65	90	130	30	42	65	90	130	130

(2) This setting is a general guidance, Ir and Irm should be adjusted according to motor characteristics and conditions of use.
(3) Applicable also with MicroLogic 6.2 M and 6.3 M trip units.

Coordination: Thermal magnetic circuit breaker + Contactor

65 to 295 kW at 500 V: type 2 coordination (with TeSys GV4 / GV5 / GV6 circuit breakers)

Standard power ratings of 3-phase motors 50/60 Hz in category AC-3e			Circuit breaker			Contactor
500 V			Product type [1]	Ir setting [2]	Irm [2]	Product type
P	Ie	Iq (max)				
kW	A	kA		A	A	
65	92	30	GV4P/GV4PE/GV4PEM115●	93	1209	LC1G115
65	92	50	GV5P150●	100	1300	LC1G115
90	128	50	GV5P150●	130	1690	LC1G150
110	156	50	GV5P220●	170	2210	LC1G185
132	184	50	GV5P220●	185	2405	LC1G225
160	224	50	GV6P320●	240	3120	LC1G265
200	280	50	GV6P320●	300	3900	LC1G330
250	344	50	GV6P500●	350	4550	LC1G400
295	405	50	GV6P500●	440	5720	LC1G500

(1) Product type to be completed by replacing the ● with the breaking performance code:

Rated conditional short-circuit (kA)	GV4P/GV4PE/GV4PEM115●			GV5P150●/ 220●		GV6P320●/ 500●	
Breaking performance code	B	N	S	F	H	F	H
500 V	10	25	30	30	50	25	50

65 to 425 kW at 500 V: type 2 coordination (with ComPacT NSX / NS circuit breakers)

Standard power ratings of 3-phase motors 50/60 Hz in category AC-3e			Circuit breaker			Contactor
500 V			Product type [1]	Ir setting [2]	Irm [2]	Product type
P	Ie	Iq (max)				
kW	A	kA		A	A	
65	92	70	NSX100● + MicroLogic 2.2 M	95	1235	LC1G115
65	92	70	NSX160● + MicroLogic 2.2 M [3]	95	1235	LC1G115
90	128	70	NSX160● + MicroLogic 2.2 M [3]	130	1690	LC1G150
110	156	70	NSX250● + MicroLogic 2.2 M [3]	170	2210	LC1G185
132	184	70	NSX250● + MicroLogic 2.2 M [3]	185	2405	LC1G225
160	224	70	NSX400● + MicroLogic 2.3 M [3]	240	3120	LC1G265
200	280	70	NSX400● + MicroLogic 2.3 M [3]	300	3900	LC1G330
250	344	70	NSX630● + MicroLogic 2.3 M [3]	350	4550	LC1G400
295	405	70	NSX630● + MicroLogic 2.3 M [3]	440	5720	LC1G500
375	516	70	NS800● + MicroLogic 5.0	560	7280	LC1G630
425	584	70	NS800● + MicroLogic 5.0	640	8320	LC1G800

(1) Product type to be completed by replacing the ● with the breaking performance code:

Rated conditional short-circuit (kA)	NSX100●					NSX160●/ NSX250●					NSX400●/ NSX630●					NS800●
Breaking performance code	F	N	H	S	L	F	N	H	S	L	F	N	H	S	L	L
500 V	25	36	50	65	70	30	36	50	65	70	25	30	50	65	70	100

(2) This setting is a general guidance, Ir and Irm should be adjusted according to motor characteristics and conditions of use.
(3) Applicable also with MicroLogic 6.2 M and 6.3 M trip units.

Coordination: Thermal magnetic circuit breaker + Contactor

0.06 to 22 kW at 690 V: type 2 coordination

Standard power ratings of 3-phase motors 50/60 Hz in category AC-3			Limiter block	Circuit breaker			Contactor
690 V			Product type	Product type	Ir Setting (1)	Irm (1)	Product type
P	Ie	Iq					
kW	A	kA			A	A	
0.06	0.12	100		GV2P01	0.16	1.5	LC1D09
0.09	0.17	100		GV2P02	0.25	2.4	LC1D09
0.12	0.23	100		GV2P02	0.25	2.4	LC1D09
0.18	0.35	100		GV2P03	0.4	5	LC1D09
0.25	0.49	100		GV2P04	0.63	8	LC1D09
0.37	0.64	100		GV2P05	1	13	LC1D09
0.55	0.87	100		GV2P05	1	13	LC1D09
0.75	1.1	100		GV2P06	1.6	22.5	LC1D09
1.1	1.6	65	LA9LB920	GV2P07	1.6	22.5	LC1D25
1.5	2.1	65	LA9LB920	GV2P07	2.5	33.5	LC1D25
2.2	2.8	65	LA9LB920	GV2P08	4	51	LC1D25
3	3.8	65	LA9LB920	GV2P08	4	51	LC1D25
4	4.9	65	LA9LB920	GV2P10	6.3	78	LC1D25
5.5	6.7	65	LA9LB920	GV2P14	10	138	LC1D25
7.5	8.9	65	LA9LB920	GV2P14	10	138	LC1D25
9	12.8	65	LA9LB920	GV2P16	14	170	LC1D25
11	12.8	65	LA9LB920	GV2P16	14	170	LC1D25
15	17	65	LA9LB920	GV2P20	18	223	LC1D25
18.5	21	65	LA9LB920	GV2P21	23	327	LC1D32
22	24	65	LA9LB920	GV2P32	32	416	LC1D40A

(1) This setting is a general guidance, Ir and Irm should be adjusted according to motor characteristics and conditions of use.

30 to 560 kW at 690 V: type 2 coordination (with ComPacT NSX / NS circuit breakers)

Standard power ratings of 3-phase motors 50/60 Hz in category AC-3e			Circuit breaker			Contactor
690 V			Product type (1)	Ir Setting (2)	Irm (2)	Product type
P	Ie	Iq (max)				
kW	A	kA		A	A	
30	32	100	NSX100● + MicroLogic 2.2 M	36	468	LC1G115
37	39	100	NSX100● + MicroLogic 2.2 M	40	520	LC1G115
45	47	100	NSX100● + MicroLogic 2.2 M	50	650	LC1G115
55	57	100	NSX100● + MicroLogic 2.2 M	60	780	LC1G115
75	77	100	NSX100● + MicroLogic 2.2 M	80	1040	LC1G115
90	93	100	NSX250● + MicroLogic 2.2 M (3)	95	1235	LC1G150
110	113	100	NSX250● + MicroLogic 2.2 M (3)	115	1495	LC1G185
132	134	100	NSX250● + MicroLogic 2.2 M (3)	140	1820	LC1G225
160	162	100	NSX250● + MicroLogic 2.2 M (3)	170	2210	LC1G225
200	203	100	NSX250● + MicroLogic 2.2 M (3)	210	2730	LC1G265
220	223	100	NSX400● + MicroLogic 2.3 M (3)	240	3120	LC1G330
250	250	100	NSX400● + MicroLogic 2.3 M (3)	260	3380	LC1G400
315	313	100	NSX630● + MicroLogic 2.3 M (3)	320	4160	LC1G400
335	335	100	NSX630● + MicroLogic 2.3 M (3)	350	4550	LC1G500
355	354	100	NSX630● + MicroLogic 2.3 M (3)	380	4940	LC1G500
375	374	100	NSX630● + MicroLogic 2.3 M (3)	380	4940	LC1G630
400	400	100	NSX630● + MicroLogic 2.3 M (3)	440	5720	LC1G630
450	455	100	NSX630● + MicroLogic 2.3 M (3)	470	6110	LC1G630
475	475	100	NSX630● + MicroLogic 2.3 M (3)	500	6500	LC1G630
500	493	100	NSX630● + MicroLogic 2.3 M (3)	500	6500	LC1G630
560	551	75	NS800● + MicroLogic 5.0	560	7280	LC1G800

(1) Product type to be completed by replacing the ● with the breaking performance code:

Rated conditional short-circuit (kA)	NSX100●/ NSX250●/ NSX400●/ NSX630●		NS800●
Breaking performance code	HB1	HB2	LB
690 V	75	100	75

(2) This setting is a general guidance, Ir and Irm should be adjusted according to motor characteristics and conditions of use.
(3) Applicable also with MicroLogic 6.2 E-M and 6.3 E-M trip units.

Coordination (UL): Thermal magnetic circuit breaker + Contactor

½ to 80 hp at 460 V - 3P

GV2P + contactor: compact, high SCCR solution.
GV3P + contactor: medium power, Everlink (long lasting power connection).
GV4PB + contactor: high power, advanced protection settings, Everlink (long lasting power connection), 18 (GV4PB●●●B), 35 (GV4PB●●●N) or 65 (GV4PB●●●S) kA SCCR.

Standard power ratings						Circuit breaker		Contactor		Circuit breaker		Contactor		Circuit breaker		Contactor	
200 V 3P		230 V 3P		460 V 3P		Product reference (2)	Dial range	Product reference (3)	Comb. SCCR 480Y	Product reference (4)	Dial range	Product reference (3)	Comb. SCCR 480Y	Product reference	Dial range	Product reference (3)	SCCR 480Y As applied
HP	FLA (1)	HP	FLA (1)	HP	FLA (1)		A		kA		A		kA		A		kA
				½	1.1	**GV2P06**	1 to 1.6	**LC1D09**	100					**GV4PB02S**	0.8 to 2	**LC1D09**	65
				¾	1.6	**GV2P06**	1 to 1.6	**LC1D09**	100					**GV4PB02S**	0.8 to 2	**LC1D09**	65
½	2.5	½	2.2	1	2.1	**GV2P07**	1.6 to 2.5	**LC1D09**	100					**GV4PB03S**	1.4 to 3.5	**LC1D09**	65
				1½	3	**GV2P08**	2.5 to 4	**LC1D09**	100					**GV4PB03S**	1.4 to 3.5	**LC1D09**	65
¾	3.7	¾	3.2	2	3.4	**GV2P08**	2.5 to 4	**LC1D09**	100					**GV4PB07S**	2.9 to 7	**LC1D09**	65
1	4.6	1	4.2	3	4.8	**GV2P10**	4 to 6.3	**LC1D09**	100					**GV4PB07S**	2.9 to 7	**LC1D09**	65
		1½	6			**GV2P10**	4 to 6.3	**LC1D09**	100					**GV4PB12S**	5 to 12.5	**LC1D12**	65
1½	6.9	2	6.8			**GV2P14**	6 to 10	**LC1D12**	100					**GV4PB12S**	5 to 12.5	**LC1D12**	65
2	7.8			5	7.6	**GV2P14**	6 to 10	**LC1D12**	100					**GV4PB12S**	5 to 12.5	**LC1D12**	65
		3	9.6			**GV2P14**	6 to 10	**LC1D12**	100	**GV3P13**	9 to 13	**LC1D18**	65	**GV4PB12S**	5 to 12.5	**LC1D12**	65
3	11			7½	11	**GV2P16**	9 to 14	**LC1D18**	50 (5)	**GV3P13**	9 to 13	**LC1D18**	65	**GV4PB25S**	10 to 25	**LC1D25**	65
				10	14	**GV2P16**	9 to 14	**LC1D18**	50 (5)	**GV3P18**	12 to 18	**LC1D18**	65	**GV4PB25S**	10 to 25	**LC1D25**	65
5	17.5	5	15.2			**GV2P20**	13 to 18	**LC1D18**	50 (5)	**GV3P18**	12 to 18	**LC1D18**	65	**GV4PB25S**	10 to 25	**LC1D25**	65
		7½	22	15	21	**GV2P21**	17 to 23	**LC1D25**	50 (5)	**GV3G25**	17 to 25	**LC1D25**	65	**GV4PB25S**	10 to 25	**LC1D25**	65
7½	25.3					**GV2P22**	20 to 25	**LC1D25**	50 (5)	**GV3P32**	23 to 32	**LC1D32**	65	**GV4PB50S**	20 to 50	**LC1D50A**	65
		10	28	20	27					**GV3P32**	23 to 32	**LC1D32**	65	**GV4PB50S**	20 to 50	**LC1D50A**	65
10	32.2			25	34					**GV3P40**	30 to 40	**LC1D40A**	65	**GV4PB50S**	20 to 50	**LC1D50A**	65
		15	42	30	40					**GV3P50**	37 to 50	**LC1D50A**	65	**GV4PB50S**	20 to 50	**LC1D50A**	65
15	48									**GV3P65**	48 to 65	**LC1D65A**	65	**GV4PB50S**	20 to 50	**LC1D50A**	65
		20	54	40	52					**GV3P65**	48 to 65	**LC1D65A**	65	**GV4PB80S**	40 to 80	**LC1D80**	65
20	62.1													**GV4PB115S**	40 to 80	**LC1D80**	65
25	78.2	25	68	50	65									**GV4PB115S**	40 to 80	**LC1D80**	65
30	92	30	80	60	77									**GV4PB115S**	65 to 115	**LC1D115**	65

(1) Motor Full Load Amp Sizes are based on NEC Table 430.250.
(2) Requires use of GV1G09 or GV2GH7 line spacer for Type F rating.
(3) Add coil suffix to complete reference part number. For example, an LC1D09G7 includes a 120 V AC coil.
(4) Requires use of GV3G66 line spacer and GVAM11 short-circuit signaling contact for Type F rating.
(5) SCCR is 42 kA at 480Y when using GV2G busbar links.

Coordination: Magnetic circuit breaker + Contactor + Overload relay

0.06 to 250 kW at 400/415 V: type 1 coordination

Standard power ratings of 3-phase motors 50/60 Hz in category AC-3									Circuit breaker			Contactor	Thermal overload relay	
400/415 V			440 V			500 V			Reference	Rating	Irm (1)	Reference (2)	Reference	Setting range
P	Ie	Iq	P	Ie	Iq	P	Ie	Iq						
kW	A	kA	kW	A	kA	kW	A	kA		A	A			A
0.06	0.2	50	0.06	0.19	50	–	–	–	**GV2LE03**	0.4	5	**LC1K06**	**LR2K0302**	0.16…0.23
–	–	–	0.09	0.28	50	–	–	–	**GV2LE03**	0.4	5	**LC1K06**	**LR2K0303**	0.23…0.36
0.09	0.3	50	0.12	0.37	50	–	–	–	**GV2LE03**	0.4	5	**LC1K06**	**LR2K0304**	0.36…0.54
0.12	0.44	50				–	–	–	**GV2LE04**	0.63	8	**LC1K06**	**LR2K0304**	0.36…0.54
0.18	0.6	50	0.18	0.55	50	–	–	–	**GV2LE04**	0.63	8	**LC1K06**	**LR2K0305**	0.54…0.8
–	–	–	0.25	0.76	50	–	–	–	**GV2LE05**	1	13	**LC1K06**	**LR2K0305**	0.54…0.8
0.25 0.37	0.85 1.1	50 50	– 0.37	– 1	– 50	– 0.37	– 0.88	– 50	**GV2LE05**	1	13	**LC1K06**	**LR2K0306**	0.8…1.2
0.55 –	1.5 –	50 –	0.55 –	1.36 –	50 –	0.55 0.75	1.2 1.5	50 50	**GV2LE06**	1.6	22.5	**LC1K06**	**LR2K0307**	1.2…1.8
–	–	–	0.75	1.68	50	–	–	–	**GV2LE07**	2.5	33.5	**LC1K06**	**LR2K0307**	1.2…1.8
0.75 1.1	1.9 2.7	50 50	– 1.1	– 2.37	– 50	– 1.1	– 2.2	– 50	**GV2LE07**	2.5	33.5	**LC1K06**	**LR2K0308**	1.8…2.6
1. 5	3.6	50	1.5	3.06	50	1.5	2.9	50	**GV2LE08**	4	51	**LC1K06**	**LR2K0310**	2.6…3.7
–	–	–	–	–	–	2.2	3.9	50	**GV2LE08**	4	51	**LC1K06**	**LR2K0312**	3.7…5.5
2.2	4.9	50	2.2	4.4	50	3	5.2	50	**GV2LE10**	6.3	78	**LC1K06**	**LR2K0312**	3.7…5.5
–	–	–	3	5.77	50	–	–	–	**GV2LE10**	6.3	78	**LC1K06**	**LR2K0314**	5.5…8
–	–	–	4	7.9	15	–	–	–	**GV2LE14**	10	138	**LC1K09**	**LR2K0314**	5.5…8
3	6.5	50	–	–	–	4	6.8	10	**GV2LE14**	10	138	**LC1K09**	**LR2K0314**	5.5…8
4	8.5	50	–	–	–	–	–	–	**GV2LE14**	10	138	**LC1K09**	**LR2K0316**	8…11.5
5.5	11.5	15	5.5	10.4	8	7.5	12.4	6	**GV2LE16**	14	170	**LC1K12**	**LR2K0321**	10…14
–	–	–	7.5	13.7	8	9	13.9	6	**GV2LE16**	14	170	**LC1D18**	**LRD21**	12…18
7.5	15.5	15	9	16.9	8	–	–	–	**GV2LE20**	18	223	**LC1D18**	**LRD21**	12…18
9	18.1	15	–	–	–	11	17.6	4	**GV2LE22**	25	327	**LC1D25**	**LRD22**	16…24
11	22	15	11	20.1	6	15	23	4	**GV2LE22**	25	327	**LC1D25**	**LRD22**	16…24
15	29	10	15	26.5	6	18.5	28	4	**GV2LE32**	32	416	**LC1D32**	**LRD32**	23…32
18.5	35	50	18.5	32.5	50	22	33	10	**GV3L40**	40	560	**LC1D40A**	**LRD340**	30…40
22	41	50	22	39	50	30	44	10	**GV3L50**	50	700	**LC1D50A**	**LRD350**	37…50

(1) Irm: setting current of the magnetic trip.
(2) For reversing operation, replace the prefix LC1 with LC2.

Coordination: Magnetic circuit breaker + Contactor + Overload relay

0.06 to 250 kW at 400/415 V: type 1 coordination

Standard power ratings of 3-phase motors 50/60 Hz in category AC-3									Circuit breaker			Contactor	Thermal overload relay	
400/415 V			440 V			500 V			Reference	Rating	Irm (1)	Reference (2)	Reference	Setting range
P	Ie	Iq	P	Ie	Iq	P	Ie	Iq						
kW	A	kA	kW	A	kA	kW	A	kA		A	A			A
30	55	50	30	51.5	50	37	53	10	GV3L65	65	910	LC1D65A	LRD365	48…65
–	–	–	37	64	50	37	53	10	GV3L65	65	910	LC1D65A	LRD365	48…65
–	–	–	–	–	–	45	64	50	GV3L65	65	910	LC1D80	LRD3361	55...70
37	66	50	–	–	–	–	–	–	GV3L73	73	1120	LC1D80A	LRD380	62...80
–	–	–	37	64	70	–	–	–	GV4L80	80	880	LC1D65A	LRD365	48…65
–	–	–	–	–	–	45	64	30	GV4L80	80	880	LC1D80	LRD3361	55...70
37	66	100	–	–	–	–	–	–	GV4L80	80	1040	LC1D80	LRD3361	55...70
–	–	–	45	76	70	55	78	30	GV4L80	80	1040	LC1D80	LRD3363	63…80
45	80	100	–	–	–	–	–	–	GV4L115	115	1380	LC1D95	LRD3365	80…104
–	–	–	–	–	–	75	106	30	GV4L115	115	1380	LC1D115	LRD4367	95…120
–	–	–	55	90	70	–	–	–	GV4L115	115	1380	LC1D115	LRD4365	80…104
55	97	100	–	–	–	–	–	–	GV4L115	115	1495	LC1D115	LRD4367	95…120
–	–	–	–	–	–	50	90	(3)	NSX100●MA (3)	100	1200	LC1D115	LRD4365	80…104
–	–	–	–	–	–	75	106	(3)	NSX160●MA (3)	150	1500	LC1D115	LRD4367	95…120
55	97	(3)	–	–	–	–	–	–	NSX160●MA (3)	150	1350	LC1D115	LRD4367	95…120
75	132	(3)	75	125	(3)	90	128	(3)	NSX160●MA (3)	150	1800	LC1D150	LRD4369	110…140
–	–	–	90	146	(3)	–	–	–	(4)	–	–	(4)	(4)	–
90	160	(3)	–	–	–	110	156	(3)	(4)	–	–	(4)	(4)	–
110	195	(3)	–	–	–	–	–	–	(4)	–	–	(4)	(4)	–
–	–	–	110	178	(3)	–	–	–	(4)	–	–	(4)	(4)	–
–	–	–	–	–	–	132	184	(3)	(4)	–	–	(4)	(4)	–
–	–	–	132	215	(3)	–	–	–	(4)	–	–	(4)	(4)	–
132	230	(3)	–	–	–	–	–	–	(4)	–	–	(4)	(4)	–
–	–	–	–	–	–	160	224	(3)	(4)	–	–	(4)	(4)	–
–	–	–	160	256	(3)	–	–	–	(4)	–	–	(4)	(4)	–
160	280	(3)	200	321	(3)	–	–	–	(4)	–	–	(4)	(4)	–
–	–	–	–	–	–	200	280	(3)	(4)	–	–	(4)	(4)	–
–	–	–	–	–	–	220	310	(3)	(4)	–	–	(4)	(4)	–
200	350	(3)	220	353	(3)	–	–	–	(4)	–	–	(4)	(4)	–
–	–	–	250	401	(3)	–	–	–	(4)	–	–	(4)	(4)	–
–	–	–	–	–	–	250	344	(3)	(4)	–	–	(4)	(4)	–
220	388	(3)	–	–	–	–	–	–	(4)	–	–	(4)	(4)	–
250	430	(3)	280	470	(3)	315	432	(3)	(4)	–	–	(4)	(4)	–
–	–	–	–	–	–	355	488	(3)	(4)	–	–	(4)	(4)	–

(1) Irm: setting current of the magnetic trip.
(2) For reversing operation, replace the prefix LC1 with LC2.
(3) Reference to be completed by replacing the ● with the breaking performance code:

Breaking performance Iq (kA)	NSX100●MA		NSX160●MA and NSX250●MA		NSX400● and NSX630●	
400/415 V	36	70	36	70	70	150
440 V	35	65	35	65	65	130
500 V	25	50	25	50	50	70
660/690 V	8	10	8	10	20	20
Code	F	H	F	H	H	L

(4) Please consult your regional sales office.

Coordination: Magnetic circuit breaker + Contactor + Overload relay

0.06 to 250 kW at 400/415 V: type 2 coordination

Standard power ratings of 3-phase motors 50/60 Hz in category AC-3									Circuit breaker			Contactor	Thermal overload relay	
400/415 V			440 V			500 V			Reference	Rating	Irm (1)	Reference (2)	Reference	Setting range
P	Ie	Iq	P	Ie	Iq	P	Ie	Iq						
kW	A	kA	kW	A	kA	kW	A	kA		A	A			A
0.06	0.2	130	**0.06**	0.19	130	**–**	–	–	**GV2L03** or **LE03**	0.4	5	**LC1D09**	**LRD02**	0.16…0.25
0.09	0.3	130	**0.09**	0.28	130	**–**	–	–	**GV2L03** or **LE03**	0.4	5	**LC1D09**	**LRD03**	0.25…0.40
–	–	–	**0.12**	0.37	130	**–**	–	–						
0.12	0.44	130	**–**	–	–	**–**	–	–	**GV2L04** or **LE04**	0.63	8	**LC1D09**	**LRD04**	0.4…0.63
0.18	0.6	130	**0.18**	0.55	130	**–**	–	–						
0.25	0.85	130	**0.25**	0.76	130	**–**	–	–	**GV2L05** or **LE05**	1	13	**LC1D09**	**LRD05**	0.63…1
0.37	1.1	130	**0.37**	0.99	130	**–**	–	–						
–	–	–	**–**	–	–	**0.37**	0.88	130	**GV2L05** or **LE05**	1	13	**LC1D09**	**LRD06**	1…1.7
0.55	1.5	130	**–**	–	–	**0.55**	1.2	130	**GV2L06** or **LE06**	1.6	22.5	**LC1D09**	**LRD06**	1…1.7
–	–	–	**0.55**	1.36	130	**0.75**	1.5	130						
0.75	1.9	130	**0.75**	1.68	130	**1.1**	2.2	130	**GV2L07** or **LE07**	2.5	33.5	**LC1D09**	**LRD07**	1.6…2.5
1.1	2.7	130	**1.1**	2.37	130	**1.5**	2.9	130	**GV2L08** or **LE08**	4	51	**LC1D09**	**LRD08**	2.5…4
1.5	3.6	130	**–**	–	–	**2.2**	3.9	130						
–	–	–	**1.5**	3.06	130	**–**	–	–	**GV2L08** or **LE08**	4	51	**LC1D09**	**LRD10**	4…6
2.2	4.9	130	**–**	–	–	**–**	–	–	**GV2L10** or **LE10**	6.3	78	**LC1D09**	**LRD10**	4…6
–	–	–	**–**	–	–	**3**	5.2	13						
–	–	–	**2.2**	4.42	50	**–**	–	–	**GV2LE10**	6.3	78	**LC1D09**	**LRD10**	4…6
–	–	–	**3**	5.77	50	**3**	5.2	50						
–	–	–	**2.2**	4.42	130	**–**	–	–	**GV2L10**	6.3	78	**LC1D09**	**LRD10**	4…6
–	–	–	**3**	5.77	130	**3**	5.2	130						
3	6.5	130	**–**	–	–	**–**	–	–	**GV2L14** or **LE14**	10	10	**LC1D09**	**LRD12**	5.5…8
–	–	–	**–**	–	–	**4**	6.8	10	**GV2LE14**	10	138	**LC1D12**	**LRD12**	5.5…8
–	–	–	**–**	–	–	**4**	6.8	50	**GV2L14**	10	138	**LC1D12**	**LRD12**	5.5…8
4	8.5	130	**–**	–	–	**–**	–	–	**GV2L14** or **LE14**	10	138	**LC1D09**	**LRD14**	7…10
–	–	–	**4**	7.9	15	**–**	–	–	**GV2LE14**	10	138	**LC1D09**	**LRD14**	7…10
–	–	–	**4**	7.9	130	**–**	–	–	**GV2L14**	10	138	**LC1D09**	**LRD14**	7…10
–	–	–	**–**	–	–	**5.5**	9.2	10	**GV2LE14**	10	138	**LC1D09**	**LRD14**	7…10
–	–	–	**–**	–	–	**5.5**	9.2	50	**GV2L14**	10	138	**LC1D09**	**LRD14**	7…10
5.5	11.5	130	**5.5**	10.4	50	**7.5**	12.4	42	**GV2L16**	14	170	**LC1D25**	**LRD16**	9…13
–	–	–	**7.5**	13.7	50	**–**	–	–	**GV2L16**	14	170	**LC1D25**	**LRD21**	12…18
7.5	15.5	50	**9**	16.9	20	**9**	13.9	10	**GV2L20**	18	223	**LC1D25**	**LRD21**	12…18
9	18.1	50	**–**	–	–	**–**	–	–	**GV2L22**	25	327	**LC1D25**	**LRD22**	16…24
11	22	50	**11**	20.1	20	**–**	–	–						
–	–	–	**–**	–	–	**11**	17.6	10	**GV2L22**	25	327	**LC1D32**	**LRD22**	16…24
–	–	–	**–**	–	–	**15**	23	10						
15	29	50	**15**	26.5	50	**–**	–	–	**GV3L32**	32	448	**LC1D40A**	**LRD332**	23…32
–	–	–	**–**	–	–	**18.5**	28	10	**GV3L32**	32	448	**LC1D65A**	**LRD332**	23…32

(1) Irm: setting current of the magnetic trip.
(2) For reversing operation, replace the prefix LC1 with LC2.

Coordination: Magnetic circuit breaker + Contactor + Overload relay

0.18 to 22 kW at 690 V: type 2 coordination

Standard power ratings of 3-phase motors 50/60 Hz in category AC-3			Limiter block	Circuit breaker			Contactor	Thermal overload relay	
690 V			Product type	Product type	Ir setting (1)	Irm (1)	Product type	Product type	Setting range
P	Ie	Iq							
kW	A	kA			A	A			A
0.18	0.35	100	–	**GV2L03**	0.4	5	**LC1D09**	**LRD03**	0.25...0.4
0.25	0.49	100	–	**GV2L04**	0.63	8	**LC1D09**	**LRD04**	0.4…0.63
0.37	0.64	100	–	**GV2L05**	1	13	**LC1D09**	**LRD05**	0.63…1
0.55	0.87	100	–	**GV2L05**	1	13	**LC1D09**	**LRD05**	0.63…1
0.75	1.1	100	–	**GV2L06**	1.6	22.5	**LC1D09**	**LRD06**	1…1.6
1.1	1.6	100	–	**GV2L06**	1.6	22.5	**LC1D09**	**LRD06**	1…1.6
1.5	2.1	65	**LA9LB920** (2)	**GV2L07**	2.5	33.5	**LC1D25**	**LRD07**	1.6…2.5
2.2	2.8	65	**LA9LB920** (2)	**GV2L08**	4	51	**LC1D25**	**LRD08**	2.5…4
3	3.8	65	**LA9LB920** (2)	**GV2L08**	4	51	**LC1D25**	**LRD08**	2.5…4
4	4.9	65	**LA9LB920** (2)	**GV2L10**	6.3	78	**LC1D25**	**LRD10**	4…6
5.5	6.7	65	**LA9LB920** (2)	**GV2L14**	10	138	**LC1D32**	**LRD12**	5.5…8
7.5	8.9	65	**LA9LB920** (2)	**GV2L14**	10	138	**LC1D32**	**LRD14**	7…10
9	10.6	65	**LA9LB920** (2)	**GV2L16**	14	170	**LC1D32**	**LRD16**	9…13
11	12.8	65	**LA9LB920** (2)	**GV2L16**	14	170	**LC1D32**	**LRD16**	9…13
15	17	65	**LA9LB920** (2)	**GV2L20**	18	223	**LC1D32**	**LRD21**	12…18
18.5	21	65	**LA9LB920** (2)	**GV2L22**	25	327	**LC1D32**	**LRD22**	16…24
22	24	65	**LA9LB920** (2)	**GV2L22**	25	327	**LC1D32**	**LRD32**	23…32
22	24	65	**LA9LB920** (2)	**GV2L32**	32	416	**LC1D40A**	**LRD332**	23…32

(1) This setting is a general guidance, Ir and Irm should be adjusted according to motor characteristics and conditions of use.
*(2) For more information about the current limiter **LA9LB920,** see pages A4/31 and A4/63.*

Coordination: Magnetic circuit breaker + Contactor + Overload relay

0.06 to 250 kW at 400/415 V: type 2 coordination

Standard power ratings of 3-phase motors 50/60 Hz in category AC-3									Circuit breaker			Contactor	Thermal overload relay	
400/415 V			440 V			500 V			Reference	Rating	Irm (1)	Reference (2)	Reference	Setting range
P	Ie	Iq	P	Ie	Iq	P	Ie	Iq						
kW	A	kA	kW	A	kA	kW	A	kA		A	A			A
18.5	35	50	–	–	–	–	–	–	**GV3L40**	40	560	**LC1D50A**	**LRD340**	30…40
–	–	–	**18.5**	32.5	50	–	–	–	**GV3L40**	40	560	**LC1D65A**	**LRD340**	30…40
22	41	50	–	–	–	–	–	–	**GV3L50**	50	700	**LC1D50A**	**LRD350**	37…50
–	–	–	**22**	39	50	**30**	44	10	**GV3L50**	50	700	**LC1D65A**	**LRD350**	37…50
30	55	50	**30**	51.5	50	**37**	53	10	**GV3L65**	65	910	**LC1D65A**	**LRD365**	48…65
37	66	50	–	–	–	–	–	–	**GV3L73**	73	1120	**LC1D80A**	**LRD380**	62...80
45	60	50	–	–	–	–	–	–	**GV3L80**	80	1120	**LC1D95**	**LRD3363**	63...80
–	–	–	**37**	64	70	–	–	–	**GV4L80**	80	880	**LC1D65A**	**LRD365**	48…65
37	66	100	**45**	76	70	(4)	(4)	(4)	**GV4L80**	80	1040	**LC1D80**	**LRD3363**	63…80
45	80	100	**55**	90	70	(4)	(4)	(4)	**GV4L115**	115	1380	**LC1D115**	**LR9D5367**	60…100
55	97	100	–	–	–	(4)	(4)	(4)	**GV4L115**	115	1495	**LC1D115**	**LR9D5369**	90…150
–	–	–	–	–	–	**55**	78	(3)	**NSX100●MA** (3)	100	1040	**LC1D80**	**LRD3363**	63…80
45	80	(3)	**55**	90	(3)	–	–	–	**NSX100●MA** (3)	100	1300	**LC1D115**	**LR9D5367**	60…100
55	97	(3)	–	–	–	–	–	–	**NSX160●MA** (3)	150	1500	**LC1D115**	**LR9D5369**	90…150
–	–	–	–	–	–	**75**	106	(3)	**NSX160●MA** (3)	150	1950	**LC1D115**	**LR9D5369**	90…150
75	132	(3)	**75**	125	(3)	–	–	–	**NSX160●MA** (3)	150	1950	**LC1D150**	**LR9D5369**	90…150
–	–	–	**90**	146	(3)	–	–	–	**NSX160●MA** (3)	150	1950	**LC1D150**	**LR9D5369**	90…150
–	–	–	–	–	–	**90**	128	(3)	**NSX160●MA** (3)	150	1200	**LC1D150**	**LR9D5369**	90…150

(1) Irm: setting current of the magnetic trip.
(2) For reversing operation, replace the prefix LC1 with LC2.
(3) Reference to be completed by replacing the ● with the breaking performance code:

Breaking performance Iq (kA)	NSX100●MA		NSX160●MA and NSX250●MA		NSX400● and NSX630●	
400/415 V	36	70	36	70	70	150
440 V	35	65	35	65	65	130
500 V	25	50	25	50	50	70
660/690 V	8	10	8	10	20	20
Code	**F**	**H**	**F**	**H**	**H**	**L**

(4) Please consult your regional sales office.

45 to 335 kW at 400 V: type 2 coordination (with TeSys GV4 or ComPacT NSX circuit breakers and LR9G overload relays)

Standard power ratings of 3-phase motors 50/60 Hz in category AC-3e			Circuit breaker		Contactor	Thermal overload relay	
400 V			Product type (1)	Irm (2)	Product type	Product type	Ir setting (2)
P	Ie	Iq (max)					
kW	A	kA		A			A
45	80	100	GV4L/GV4LE115●	1265	LC1G115	LR9G115	80
55	97	100	GV4L/GV4LE115●	1100	LC1G115	LR9G225	80
45	80	130	NSX100● + MA	1265	LC1G115	LR9G115	97
55	97	130	NSX160● + MA	1500	LC1G115	LR9G225	97
75	132	130	NSX160● + MA	1800	LC1G150	LR9G225	132
90	160	130	NSX250● + MA	2640	LC1G185	LR9G225	160
110	195	130	NSX250● + MA	2640	LC1G225	LR9G225	195
110	195	130	NSX400● + MicroLogic 1.3 M	3520	LC1G265	LR9G500	195
132	230	130	NSX400● + MicroLogic 1.3 M	3520	LC1G265	LR9G500	230
160	280	130	NSX400● + MicroLogic 1.3 M	3840	LC1G330	LR9G500	280
200	350	130	NSX630● + MicroLogic 1.3 M	5500	LC1G400	LR9G500	350
220	380	130	NSX630● + MicroLogic 1.3 M	5500	LC1G500	LR9G500	380
250	430	130	NSX630● + MicroLogic 1.3 M	6000	LC1G500	LR9G500	430
300	460	130	NS800● + MicroLogic 5.0 LR OFF	8800	LC1G630	LR9G630	460
335	575	130	NS800● + MicroLogic 5.0 LR OFF	9600	LC1G630	LR9G630	575

(1) Product type to be completed by replacing the ● with the breaking performance code:

Rated conditional short-circuit (kA)	GV4L115●/ GV4LE115●			NSX100●/ NSX160●/ NSX250●/ NSX400●/ NSX630●					NS800●
Breaking performance code	B	N	S	F	N	H	S	L	L
400 V	25	50	100	36	50	70	100	130	150

55 to 355 kW at 440 V: type 2 coordination (with TeSys GV4 or ComPacT NSX / NS circuit breakers and LR9G overload relays)

Standard power ratings of 3-phase motors 50/60 Hz in category AC-3e			Circuit breaker		Contactor	Thermal overload relay	
440 V			Product type (1)	Irm (2)	Product type	Product type	Ir setting (2)
P	Ie	Iq (max)					
kW	A	kA		A			A
55	88	70	GV4L/GV4LE115●	1150	LC1G115	LR9G115	88
55	88	130	NSX100● + MA	1500	LC1G115	LR9G115	88
75	120	130	NSX160● + MA	1800	LC1G150	LR9G225	120
90	145	130	NSX160● + MA	2640	LC1G150	LR9G225	145
110	177	130	NSX250● + MA	2640	LC1G185	LR9G225	177
132	209	130	NSX250● + MA	2860	LC1G225	LR9G225	209
160	255	130	NSX400● + MicroLogic 1.3 M	3520	LC1G265	LR9G500	255
200	318	130	NSX400● + MicroLogic 1.3 M	4160	LC1G330	LR9G500	318
220	343	130	NSX630● + MicroLogic 1.3 M	5500	LC1G400	LR9G500	343
250	390	130	NSX630● + MicroLogic 1.3 M	5500	LC1G400	LR9G500	390
300	466	130	NSX630● + MicroLogic 1.3 M	6500	LC1G500	LR9G500	466
335	521	130	NS800● + MicroLogic 5.0 LR OFF	8800	LC1G630	LR9G630	521
355	554	130	NS800● + MicroLogic 5.0 LR OFF	9600	LC1G630	LR9G630	554

(1) Product type to be completed by replacing the ● with the breaking performance code:

Rated conditional short-circuit (kA)	GV4L115●/ GV4LE115●			NSX100●/ NSX160●/ NSX250●					NSX400●/ NSX630●					NS800●
Breaking performance code	B	N	S	F	N	H	S	L	F	N	H	S	L	L
440 V	20	50	70	35	50	65	100	130	30	42	65	100	130	150

(2) This setting is a general guidance, Ir and Irm should be adjusted according to motor characteristics and conditions of use.

Coordination: Magnetic circuit breaker + Contactor + Overload relay

65 to 425 kW at 500 V: type 2 coordination (with TeSys GV4 or ComPacT NSX / NS circuit breakers and LR9G overload relays)

Standard power ratings of 3-phase motors 50/60 Hz in category AC-3e			Circuit breaker		Contactor	Thermal overload relay	
500 V			Product type (1)	Irm (2)	Product type	Product type	Ir setting (2)
P	Ie	Iq (max)					
kW	A	kA		A			A
65	92	30	GV4L/GV4LE115●	1380	LC1G115	LR9G115	92
65	92	70	NSX100● + MA100	1300	LC1G115	LR9G115	92
90	128	70	NSX160● + MA150	1950	LC1G150	LR9G225	128
110	156	70	NSX250● + MA220	2200	LC1G185	LR9G225	156
132	184	70	NSX400● + MicroLogic 1.3 M	2560	LC1G225	LR9G225	184
160	224	70	NSX400● + MicroLogic 1.3 M	3200	LC1G265	LR9G500	224
200	280	70	NSX400● + MicroLogic 1.3 M	3840	LC1G330	LR9G500	280
250	344	70	NSX630● + MicroLogic 1.3 M	5500	LC1G400	LR9G500	344
295	405	70	NSX630● + MicroLogic 1.3 M	6500	LC1G500	LR9G500	405
375	516	70	NS800● + MicroLogic 5.0 LR OFF	8800	LC1G630	LR9G630	516
425	584	70	NS800● + MicroLogic 5.0 LR OFF	9600	LC1G800	LR9G630	584

(1) Product type to be completed by replacing the ● with the breaking performance code:

Rated conditional short-circuit (kA)	GV4L115●/ GV4LE115●			NSX100●					NSX160●/ NSX250●					NSX400●/ NSX630●					NS800●
Breaking performance code	B	N	S	F	N	H	S	L	F	N	H	S	L	F	N	H	S	L	L
500 V	10	25	30	25	36	50	65	70	30	36	50	65	70	25	30	50	65	70	100

(2) This setting is a general guidance, Ir and Irm should be adjusted according to motor characteristics and conditions of use.

Coordination: Magnetic circuit breaker + Contactor + Overload relay

0.06 to 30 kW at 400/415 V: type 2 coordination

Standard power ratings of 3-phase motors 50/60 Hz in category AC-3						Circuit breaker			Contactor	Electronic thermal overload relay	
400/415 V			690 V			Reference	Rating	Irm	Reference	Reference	Setting range
P	Ie	Iq	P	Ie	Iq						
kW	A	kA	kW	A	kA		A	A			A
0.06	0.2	100	**–**	–	–	**GV2L03**	0.4	5	**LC1D09**	**LR9D01**	0.1…0.5
0.09	0.3	100	**–**	–	–	**GV2L03**	0.4	5	**LC1D09**	**LR9D01**	0.1…0.5
0.12	0.44	100	**–**	–	–	**GV2L04**	0.63	8	**LC1D18**	**LR9D02**	0.4…2.0
0.18	0.6	100	**–**	–	–	**GV2L04**	0.63	8	**LC1D18**	**LR9D02**	0.4…2.0
0.25	0.85	100	**–**	–	–	**GV2L05**	1	13	**LC1D18**	**LR9D02**	0.4…2.0
0.37	1.1	100	**–**	–	–	**GV2L05**	1	13	**LC1D18**	**LR9D02**	0.4…2.0
0.55	1.5	100	**–**	–	–	**GV2L06**	1.6	22.5	**LC1D18**	**LR9D02**	0.4…2.0
0.75	1.9	100	**–**	–	–	**GV2L07**	2.5	33.5	**LC1D18**	**LR9D08**	1.6…8.0
1.1	2.7	100	**–**	–	–	**GV2L08**	4	51	**LC1D18**	**LR9D08**	1.6…8.0
1.5	3.6	100	**–**	–	–	**GV2L08**	4	51	**LC1D18**	**LR9D08**	1.6…8.0
2.2	4.9	100	**–**	–	–	**GV2L10**	6.3	78	**LC1D18**	**LR9D08**	1.6…8.0
3	6.5	100	**–**	–	–	**GV2L14**	10	138	**LC1D25**	**LR9D32**	6.4…32
4	8.5	100	**–**	–	–	**GV2L14**	10	138	**LC1D25**	**LR9D32**	6.4…32
5.5	11.5	100	**–**	–	–	**GV2L16**	14	170	**LC1D25**	**LR9D32**	6.4…32
7.5	15.5	50	**–**	–	–	**GV2L20**	18	223	**LC1D25**	**LR9D32**	6.4…32
11	22	50	**–**	–	–	**GV2L22**	25	327	**LC1D25**	**LR9D32**	6.4…32
15	29	50	**–**	–	–	**GV3L32**	40	448	**LC1D65A**	**LR9D110S**	22…110
18.5	35	50	**–**	–	–	**GV3L40**	40	560	**LC1D65A**	**LR9D110S**	22…110
22	41	50	**–**	–	–	**GV3L50**	50	700	**LC1D65A**	**LR9D110S**	22…110
30	55	50	**–**	–	–	**GV3L65**	65	910	**LC1D65A**	**LR9D110S**	22…110
–	–	–	**0.37**	0.64	50	**GV2L05**	1	13	**LC1D09**	**LR9D02**	0.4…2.0
–	–	–	**0.55**	0.87	50	**GV2L05**	1	13	**LC1D09**	**LR9D02**	0.4…2.0
–	–	–	**0.75**	1.1	50	**GV2L06**	1.6	22.5	**LC1D09**	**LR9D02**	0.4…2.0
–	–	–	**1.1**	1.6	50	**GV2L07 + LA9LB920** (1)	2.5	33.5	**LC1D25**	**LR9D08**	1.6…8.0
–	–	–	**1.5**	2.1	50	**GV2L07 + LA9LB920** (1)	2.5	33.5	**LC1D25**	**LR9D08**	1.6…8.0
–	–	–	**2.2**	2.8	50	**GV2L08 + LA9LB920** (1)	4	51	**LC1D25**	**LR9D08**	1.6…8.0
–	–	–	**3**	4	50	**GV2L08 + LA9LB920** (1)	4	51	**LC1D25**	**LR9D08**	1.6…8.0
–	–	–	**4**	5	50	**GV2L10 + LA9LB920** (1)	6.3	78	**LC1D25**	**LR9D08**	1.6…8.0
–	–	–	**5.5**	7	50	**GV2L14 + LA9LB920** (1)	10	138	**LC1D25**	**LR9D32**	6.4…32
–	–	–	**7.5**	8.9	50	**GV2L14 + LA9LB920** (1)	10	138	**LC1D25**	**LR9D32**	6.4…32
–	–	–	**11**	13	3	**GV3L18+ LA9LB920** (1)	14	252	**LC1D32**	**LR9D32**	6.4…32
–	–	–	**15**	16.5	3	**GV2L22 + LA9LB920** (1)	18	327	**LC1D32**	**LR9D32**	6.4…32
–	–	–	**18.5**	21	3	**GV3L25 + LA9LB920** (1)	25	350	**LC1D65A**	**LR9D32**	6.4…32
–	**–**	**–**	**22**	25	3	**GV2L32 + LA9LB920** (1)	32	416	**LC1D65A**	**LR9D32**	6.4…32

*(1) For more information about the current limiter **LA9LB920**, see pages A4/31 and A4/63.*

30 to 500 kW at 690 V: type 2 coordination (with ComPacT NSX / NS circuit breakers and LR9G overload relays)

Standard power ratings of 3-phase motors 50/60 Hz in category AC-3e			Circuit breaker		Contactor	Thermal overload relay	
690 V			Product type (1)	Irm (2)	Product type	Product type	Ir setting (2)
P	Ie	Iq (max)					
kW	A	kA		A			A
30	32	100	**NSX100● + MA**	550	**LC1G115**	**LR9G115**	32
37	39	100	**NSX100● + MA**	550	**LC1G115**	**LR9G115**	39
45	47	100	**NSX100● + MA**	650	**LC1G115**	**LR9G115**	47
55	57	100	**NSX100● + MA**	1100	**LC1G150**	**LR9G115**	57
75	77	100	**NSX100● + MA**	1100	**LC1G185**	**LR9G225**	77
90	93	100	**NSX250● + MA**	1650	**LC1G225**	**LR9G225**	93
110	113	100	**NSX250● + MA**	1650	**LC1G225**	**LR9G225**	113
132	134	100	**NSX250● + MA**	1800	**LC1G265**	**LR9G500**	134
160	162	100	**NSX250● + MA**	2420	**LC1G330**	**LR9G500**	162
200	203	100	**NSX250● + MA**	2640	**LC1G400**	**LR9G500**	203
220	223	100	**NSX400● + MicroLogic 1.3 M**	3520	**LC1G400**	**LR9G500**	223
250	250	100	**NSX400● + MicroLogic 1.3 M**	3520	**LC1G500**	**LR9G500**	250
315	313	100	**NSX630● + MicroLogic 1.3 M**	5500	**LC1G500**	**LR9G500**	313
335	335	100	**NSX630● + MicroLogic 1.3 M**	5500	**LC1G630**	**LR9G630**	335
355	354	100	**NSX630● + MicroLogic 1.3 M**	5500	**LC1G630**	**LR9G630**	354
375	374	100	**NSX630● + MicroLogic 1.3 M**	5500	**LC1G630**	**LR9G630**	374
400	400	100	**NSX630● + MicroLogic 1.3 M**	5500	**LC1G630**	**LR9G630**	400
450	455	100	**NSX630● + MicroLogic 1.3 M**	6000	**LC1G630**	**LR9G630**	455
475	475	100	**NSX630● + MicroLogic 1.3 M**	6500	**LC1G630**	**LR9G630**	475
500	493	100	**NSX630● + MicroLogic 1.3 M**	6500	**LC1G630**	**LR9G630**	493

(1) Product type to be completed by replacing the ● with the breaking performance code:

Rated conditional short-circuit (kA)	NSX100●/ NSX250●/ NSX400●/ NSX630●	
Breaking performance code	HB1	HB2
690 V	75	100

(2) This setting is a general guidance, Ir and Irm should be adjusted according to motor characteristics and conditions of use.

1.5 to 315 kW at 400/415 V: type 1 coordination

Maximum operating rate: LC3K: 12 starts/hour; LC3D: 30 starts/hour.
Maximum starting time: LC3K and LC3D: 30 seconds.

Standard power ratings of 3-phase motors 50/60 Hz in category AC-3								Fuse carrier (basic block)	aM fuses		Star-delta contactors	Thermal overload relay	
400/415 V				440 V				Reference	Size	Rating	Reference	Reference	Setting range
P	Ie	IrD (1)	Iq	P	Ie	IrD (1)	Iq						
kW	A	A	kA	kW	A	A	kA			A			A
1.5	3.5	2	50	1.5	3.06	2	50	LS1D32	10 x 38	4	LC3K06	LR2K0308	1.8…2.6
2.2	5	3	50	–	–	–	–	LS1D32	10 x 38	6	LC3K06	LR2K0310	2.6…3.7
–	–	–	–	2.2	4.42	3	50						
–	–	–	–	3	5.77	3	50	LS1D32	10 x 38	8	LC3K06	LR2K0310	2.6…3.7
3	6.5	4	50	–	–	–	–	LS1D32	10 x 38	8	LC3K06	LR2K0312	3.7…5.5
4	8.4	5	50	4	7.9	5	50	LS1D32	10 x 38	12	LC3K06	LR2K0312	3.7…5.5
5.5	11	6	50	5.5	10.4	6	50	LS1D32	10 x 38	16	LC3K06	LR2K0314	5.5…8
7.5	14.8	9	50	7.5	13.7	8	50	LS1D32	10 x 38	16	LC3K09	LR2K0316	8…11.5
9	18.1	10	100	9	16.9	10	50	LS1D32	10 x 38	20	LC3D12A	LRD16	9…13
11	21	12	100	11	20.1	12	100	GK1EK	14 x 51	25	LC3D12A	LRD16	9…13
15	28.5	16	100	15	26.5	15	100	GK1EK	14 x 51	32	LC3D18A	LRD21	12…18
18.5	35	20	100	18.5	32.8	19	100	GK1EK	14 x 51	40	LC3D18A	LRD22	16…24
–	–	–	–	22	39	23	100	GS●J	22 x 58	50	LC3D18A	LRD22	16…24
22	42	24	100	–	–	–	–	GS●J	22 x 58	50	LC3D32A	LRD32	23…32
–	–	–	–	30	51.5	30	100	GS●J	22 x 58	63	LC3D32A	LRD32	23…32
30	57	33	100	37	64	37	100	GS●J	22 x 58	80	3 x LC1D40A	LRD340	30…40
37	69	40	100	–	–	–	–	GS●J	22 x 58	80	3 x LC1D40A	LRD350	37…50
–	–	–	–	45	76	44	100	GS●J	22 x 58	80	3 x LC1D50A	LRD350	37…50
45	81	47	100	–	–	–	–	GS●J	22 x 58	100	3 x LC1D50A	LRD350	37…50
–	–	–	–	55	90	52	100	GS●K	22 x 58	100	3 x LC1D50A	LRD365	48…65
55	100	58	100	–	–	–	–	GS●K	22 x 58	125	3 x LC1D65A	LRD365	48…65
75	135	78	100	75	125	72	100	GS●L	T0	160	LC3D80	LRD3363	63…80
–	–	–	–	90	146	84	100	GS●L	T0	160	LC3D115	LRD4365	80…104
90	165	95	100	–	–	–	–	GS●N	T1	200	LC3D115	LRD4367	95…120
110	200	115	100	110	178	103	100	GS●N	T1	200	LC3D115	LRD4367	95…120
132	240	139	100	132	215	124	100	GS●QQ	T2	250	LC3D150	LRD4369	110…140
160	285	165	100	160	256	148	100	(2)	–	–	(2)	(2)	–
–	–	–	–	200	321	185	100	(2)	–	–	(2)	(2)	–
220	388	225	100	–	–	–	–	(2)	–	–	(2)	(2)	–
–	–	–	–	250	401	233	100	(2)	–	–	(2)	(2)	–
280	480	278	100	–	–	–	–	(2)	–	–	(2)	(2)	–
–	–	–	–	315	505	293	100	(2)			(2)	(2)	–
315	555	322	100	355	518	300	100		–	–			
–	–	–	–	375	575	334	100	(2)	–	–	(2)	(2)	–

(1) IrD: current in the motor windings in delta connection.
(2) Please consult your regional sales office.

Coordination: Star-delta with NFC or DIN fuses + Contactors + Overload relay

1.5 to 355 kW at 400/415 V: type 2 coordination

Maximum operating rate: LC1D: 30 starts/hour; LC1F: 12 starts/hour.
Maximum starting time: LC1D: 30 seconds; LC1F: 20 seconds.

Standard power ratings of 3-phase motors 50/60 Hz in category AC-3						Switch-disconnector-fuse	aM fuses		Star-delta contactors	Thermal overload relay	
400/415 V			440 V			Reference	Size	Rating	Reference	Reference	Setting range
P	Ie	Iq	P	Ie	Iq						
kW	A	kA	kW	A	kA			A			A
1.5	3.5	50	**1.5**	3.06	50	**GS1DD**	10 x 38	4	3 x **LC1D09**	**LRD08**	2.5…4
2.2	5	50	**2.2**	4.42	50	**GS1DD**	10 x 38	6	3 x **LC1D09**	**LRD10**	4…6
3	6.5	50	**3**	5.77	50	**GS1DD**	10 x 38	8	3 x **LC1D09**	**LRD12**	5.5…8
4	8.4	50	**4**	7.9	50	**GS1DD**	10 x 38	10	3 x **LC1D09**	**LRD14**	7…10
5.5	11	50	**5.5**	10.4	50	**GS1DD**	10 x 38	16	3 x **LC1D12**	**LRD16**	9…13
7.5	14.8	50	**7.5**	13.7	50	**GS1DD**	10 x 38	16	3 x **LC1D18**	**LRD21**	12…18
9	18.1	100	**9**	16.9	100						
11	21	100	**11**	20.1	100	**GS●F**	14 x 51	25	3 x **LC1D25**	**LRD22**	16…24
15	28.5	100	**15**	26.5	100	**GS●F**	14 x 51	32	3 x **LC1D32**	**LRD32**	23…32
18.5	35	100	**18.5**	32.8	100	**GS●F**	14 x 51	40	3 x **LC1D40A**	**LRD340**	30…40
22	42	100	**22**	39	100	**GS●J**	22 x 58	50	3 x **LC1D50A**	**LRD350**	37…50
30	57	100	**30**	51.5	100	**GS●J**	22 x 58	80	3 x **LC1D65A**	**LRD365**	48…65
37	69	100	**37**	64	100	**GS●J**	22 x 58	80	3 x **LC1D80**	**LRD3363**	63…80
–	–	–	**45**	76	100	**GS●J**	22 x 58	80	3 x **LC1D80**	**LRD3365**	80…104
45	81	100	–	–	–	**GS●J**	22 x 58	100	3 x **LC1D115**	**LR9D5367**	60…100
–	–	–	**55**	90	100	**GS●L**	T0	125	3 x **LC1D115**	**LR9D5369**	90…150
55	100	100	–	–	–	**GS●L**	T0	125	3 x **LC1D150**	**LR9D5369**	90…150
–	–	–	**75**	125	100	**GS●L**	T0	160	3 x **LC1D150**	**LR9D5369**	90…150
355	605	100	–	–	–	**GS2V**	T4	800	3 x **LC1F780**	**LR9F7381**	380…630

Coordination: Star-delta with Fuses (DIN type aM) + Contactors + Overload relay

Contactor: **Maximum operating rate**: 30 starts/hour - **Maximum starting time**: 30 seconds.
The coordination table is for normal starting conditions (Class 10e/ 20e). For other heavy starting applications with long start times, please contact techncial support.
RE17RMMWS timer to be used for Star-Delta starter application.

90 to 335 kW at 400 V: type 2 coordination

Standard power ratings of 3-phase motors 50/60 Hz in category AC-3			Switch-disconnector	aM fuses		Contactor Line (KM2) / Delta (KM3) [1]	Contactor Star (KM1) [1]	Thermal overload relay	
400 V			Product type	Size	Rating	Product type		Product type	Ir setting [2]
P	Ie	Iq (max)							
kW	A	kA			A				A
90	160	80	GS●N	1	200	LC1G115	LC1D65	LR9G115	92
110	195	80	GS●N	1	250	LC1G150	LC1D80	LR9G225	113
132	230	80	GS●QQ	2	315	LC1G185	LC1G115	LR9G225	133
160	280	80	GS●QQ	2	400	LC1G225	LC1G115	LR9G225	162
200	350	80	GS2●S	3	500	LC1G265	LC1G115	LR9G225	202
220	380	80	GS2●S	3	500	LC1G330	LC1G150	LR9G500	219
250	430	80	GS2●S	3	500	LC1G400	LC1G150	LR9G500	248
315	540	80	GS2●S	3	630	LC1G500	LC1G225	LR9G500	312
335	575	80	GS2●V	4	800	LC1G500	LC1G225	LR9G500	332

110 to 400 kW at 440 V: type 2 coordination

Standard power ratings of 3-phase motors 50/60 Hz in category AC-3			Switch-disconnector	aM fuses		Contactor Line (KM2) / Delta (KM3) [1]	Contactor Star (KM1) [1]	Thermal overload relay	
440 V			Product type	Size	Rating	Product type		Product type	Ir setting [2]
P	Ie	Iq max							
kW	A	kA			A				A
110	177	80	GS●N	1	200	LC1G115	LC1D65	LR9G115	102
132	209	80	GS●N	1	250	LC1G150	LC1D80	LR9G225	121
160	255	80	GS●QQ	2	315	LC1G150	LC1G115	LR9G225	147
200	318	80	GS●QQ	2	400	LC1G185	LC1G115	LR9G225	184
220	343	80	GS2●S	3	500	LC1G225	LC1G115	LR9G225	198
250	390	80	GS2●S	3	500	LC1G265	LC1G150	LR9G500	225
315	505	80	GS2●S	3	500	LC1G265	LC1G150	LR9G500	292
355	554	80	GS2●S	3	630	LC1G330	LC1G225	LR9G500	320
400	627	80	GS2●V	4	800	LC1G400	LC1G225	LR9G500	362

90 to 315 kW at 500 V: type 2 coordination

Standard power ratings of 3-phase motors 50/60 Hz in category AC-3			Switch-disconnector	aM fuses		Contactor Line (KM2) / Delta (KM3) [1]	Contactor Star (KM1) [1]	Thermal overload relay	
500 V			Product type	Size	Rating	Product type		Product type	Ir setting [2]
P	Ie	Iq max							
kW	A	kA			A				A
90	156	80	GS●N	1	200	LC1G115	LC1D65	LR9G115	90
110	184	80	GS●N	1	250	LC1G150	LC1D80	LR9G115	106
132	224	80	GS●QQ	2	315	LC1G150	LC1G115	LR9G225	129
160	280	80	GS●QQ	2	400	LC1G185	LC1G115	LR9G225	162
200	344	80	GS2●S	3	500	LC1G225	LC1G115	LR9G225	199
220	405	80	GS2●S	3	500	LC1G265	LC1G150	LR9G500	234
250	405	80	GS2●S	3	500	LC1G265	LC1G150	LR9G500	234
315	516	80	GS2●S	3	630	LC1G330	LC1G225	LR9G500	298

(1) Refer to diagram page A5/40.
(2) This setting is a general guidance, Ir should be adjusted according to motor characteristics and conditions of use.

Coordination: Star-delta with BS fuses + Contactors + Overload relay

1.5 to 375 kW at 415 V: type 2 coordination

Maximum operating rate: LC1D: 30 starts/hour.
Maximum starting time: LC1D: 30 seconds.

Standard power ratings of 3-phase motors 50/60 Hz in category AC-3						Switch-disconnector-fuse	BS fuses		Star-delta contactors	Thermal overload relay	
415 V			440 V			Reference	Size	Rating	Reference	Reference	Setting range
P	Ie	Iq	P	Ie	Iq						
kW	A	kA	kW	A	kA			A			A
1.5	3.5	50	**1.5**	3.06	50	**GS1DDB**	A1	NIT 16	3 x **LC1D09**	**LRD08**	2.5…4
2.2	5	50	**2.2**	4.42	50	**GS1DDB**	A1	NIT 16	3 x **LC1D09**	**LRD10**	4…6
3	6.5	50	**3**	5.77	50	**GS1DDB**	A1	NIT 20	3 x **LC1D09**	**LRD12**	5.5…8
4	8.4	50	**4**	7.9	50	**GS1DDB**	A1	NIT 20	3 x **LC1D09**	**LRD14**	7…10
5.5	11	50	**5.5**	10.4	50	**GS1DDB**	A1	NIT 20M25	3 x **LC1D12**	**LRD16**	9…13
7.5	14.8	50	**7.5**	13.7	50	**GS1DDB**	A1	NIT 20M32	3 x **LC1D18**	**LRD21**	12…18
9	18.1	50	**9**	16.9	50	**GS2GB**	A2	TIA 32M35	3 x **LC1D18**	**LRD21**	12…18
11	21	50	**11**	20.1	50	**GS2GB**	A2	TIA 32M50	3 x **LC1D25**	**LRD22**	16…24
15	28.5	50	**15**	26.5	50	**GS2GB**	A2	TIA 32M63	3 x **LC1D32**	**LRD32**	23…32
22	42	50	**22**	39	50	**GS2GB**	A3	TIS 63M80	3 x **LC1D50A**	**LRD350**	37…50
–	–	–	**30**	51.5	50	**GS2GB**	A3	TIS 63M100	3 x **LC1D65A**	**LRD365**	48…65
30	57	50	**–**	–	–	**GS2GB**	A3	TIS 63M100	3 x **LC1D65A**	**LRD365**	48…65
45	81	50	**45**	76	50	**GS2LLB**	A4	TCP 100M125	3 x **LC1D80**	**LRD3363**	63…80
55	100	80	**55**	90	80	**GS2LLB**	A4	TCP 100M160	3 x **LC1D115**	**LR9D5369**	90…150
80	138	80	**80**	132	80	**GS2LB**	B2	TF 200M250	3 x **LC1D150**	**LR9D5369**	90…150

1.5 to 250 kW at 400/415 V and 440 V: type 1 coordination

Maximum operating rate: LC3K: 12 starts/hour; LC3D: 30 starts/hour.
Maximum starting time: 30 seconds.

Standard power ratings of 3-phase motors 50-60 Hz in category AC-3								Circuit breaker		Star-delta contactors
400/415 V				440 V				Reference *References in italics are available in CEE zone only*	Setting range of thermal trips	Reference
P	Ie	IrD (1)	Iq (2)	P	Ie	IrD (1)	Iq (2)			
kW	A	A	kA	kW	A	A	kA		A	
1.5	3.6	2	50	**1.5**	3.06	1.8	50	**GV2ME08** *GV2ME08AP*	2.5…4	**LC3K06**
2.2 –	4.9 –	2.9 –	50 –	**2.2** **3**	4.42 5.77	2.6 3.3	50 50	**GV2ME10** *GV2ME10AP*	4…6.3	**LC3K06**
3 **4**	6.5 8.5	3.8 4.9	50 50	– **4**	– 7.9	– 4.6	– 15	**GV2ME14** *GV2ME14AP*	6…10	**LC3K06**
5.5	11.5	6.4	15	**5.5**	10.4	6	8	**GV2ME16** *GV2ME16AP*	9…14	**LC3K06**
7.5	15.5	8.6	15	**7.5**	13.7	7.9	8	**GV2ME20** *GV2ME20AP*	13…18	**LC3K09**
–	–	–	–	**9**	16.9	9.8	8	**GV2ME20** *GV2ME20AP*	13…18	**LC3D12A**
9	18.1	10	15	**11**	20.1	12	6	**GV2ME21** *GV2ME21AP*	17…23	**LC3D12A**
11	22	12	15	–	–	–	–	**GV2ME22** *GV2ME22AP*	20…25	**LC3D12A**
15	29	17	10	**15**	26.5	15	6	**GV2ME32** *GV2ME32AP*	24…32	**LC3D18A**
18.5	35	20	50	**18.5**	32.8	19	50	**GV3P40**	30…40	**LC3D18A**
–	–	–	–	**22**	39	23	50	**GV3P50**	37…50	**LC3D32A**
22	41	24	50	**30**	51.5	30	50	**GV3P50**	37…50	**LC3D32A**
30	55	33	50	**30**	51.5	30	50	**GV3P65**	48…65	**LC3D32A**
37	66	40	50	**37**	64	37	50	**GV3P65**	48…65	3 x **LC1D40A** (3)
37	66	40	100	**37**	64	37	70	**GV4P80**	40…80	3 x **LC1D40A** (3)
–	–	–	–	**45**	76	44	70	**GV4P80**	40…80	2 x **LC1D50A** **+1 x LC1D40A** (3)
45	80	47	100	–	–	–	–	**GV4P115**	65…115	2 x **LC1D50A** **+1 x LC1D40A** (3)
55	97	58	100	**55**	90	52	70	**GV4P115**	65…115	2 x **LC1D65A** **+1 x LC1D40A** (3)
75	132	78	35	**75**	125	72	35	**GV5P150F**	70…150	**LC3D80**
–	–	–	–	**90**	146	84	35	**GV5P150F**	0…150	**LC3D115**
90 **110**	160 195	95 115	35 35	**110**	178	103	35	**GV5P220F**	100…220	**LC3D115**
–	–	–	–	**132**	215	124	35	**GV5P220F**	100…220	**LC3D150**
132	230	135	36	–	–	–	–	**GV6P320F**	160...320	**LC3D150**
160	270	158	36	**160**	256	94	35	(4)	–	(4)
220	380	220	36	**250**	401	146	35	(4)	–	(4)
250	430	250	36	**300**	480	175	35	(4)	–	(4)

(1) IrD: current in the motor windings in delta connection.
*(2) The breaking performance of circuit breakers **GV2ME** can be increased by adding a current limiter **GV1L3**, see page B6/23.*
*(3) For mounting 3 contactors **LC1D●●A**, star-delta starter kit **LAD9SD3** must be ordered separately, see page B8/43.*
(4) Please consult your regional sales office.

1.5 to 90 kW at 400/415 V and 440 V: type 2 coordination

Maximum operating rate: LC1D: 30 starts/hour.
Maximum starting time: LC1D: 30 seconds.

Standard power ratings of 3-phase motors 50-60 Hz in category AC-3								Circuit breaker		Star-delta contactors
400/415 V				440 V				Reference	Setting range of thermal trips	Reference
P	Ie	IrD (7)	Iq	P	Ie	IrD (7)	Iq (1)			
kW	A	A	kA	kW	A	A	kA		A	
1.5	3.6	–	130	**1.5**	3.06	–	130	**GV2P08**	2.5…4	3 x **LC1D09** (2)
2.2	4.9	–	130	**2.2**	4.42	–	130	**GV2P10**	4…6.3	3 x **LC1D18** (3)
–	–	–	–	**3**	5.77	–	130	**GV2P10**	4...6.3	3 x **LC1D18** (3)
3	6.5	–	130	–	–	–	–	**GV2P14**	6…10	3 x **LC1D18** (3)
4	8.5	–	130	**4**	7.9	–	130	**GV2P14**	6…10	3 x **LC1D18** (3)
5.5	11.5	–	130	**5.5**	10.4	–	50	**GV2P16**	9…14	3 x **LC1D25** (3)
–	–	–	–	**7.5**	13.7	–	50	**GV2P16**	9…14	3 x **LC1D25** (3)
7.5	15.5	–	50	**9**	16.9	–	20	**GV2P20**	13…18	3 x **LC1D25** (3)
9	18.1	–	50	**11**	20.1	–	20	**GV2P21**	17…23	3 x **LC1D25** (3)
11	22	–	50	–	–	–	–	**GV2P22**	20…25	3 x **LC1D25** (3)
15	29	–	50	**15**	26.5	–	50	**GV3P32**	23…32	3 x **LC1D40A** (4)
18.5	35	–	50	–	–	–	–	**GV3P40**	30…40	2 x **LC1D50A** **+1 x LC1D40A** (3)
–	–	–	–	**18.5**	32.8	–	50	**GV3P40**	30…40	2 x **LC1D65A** **+1 x LC1D40A** (4)
22	41	–	50	–	–	–	–	**GV3P50**	37…50	2 x **LC1D50A** **+1 x LC1D40A** (3)
–	–	–	–	**22**	39	–	50	**GV3P50**	37…50	2 x **LC1D65A** **+1 x LC1D40A** (4)
30	55	–	50	**30**	51.5	–	50	**GV3P65**	48…65	2 x **LC1D65A** **+1 x LC1D40A** (4)
37	66	–	100	**45**	76	–	70	**GV4P80**	40…80	3 x **LC1D80** (5)
–	–	–	–	**37**	64	–	70	**GV4P80**	40…80	3 x **LC1D65A** (4)
45	80	–	100	–	–	–	–	**GV4P115**	65…115	3 x **LC1D115** (6)
55	97	–	100	**55**	90	–	70	**GV4P115**	65…115	3 x **LC1D115** (6)
75	132	78	70	**75**	125	74	65	**GV5P150H**	70…150	3 x **LC1D150** (6)
–	–	–	–	**90**	146	86	65	**GV5P150H**	70…150	3 x **LC1D150** (6)

*(1) The breaking performance of circuit breakers **GV2P** can be increased by adding a current limiter **GV1L3**, see page B6/54.*
*(2) For mounting 3 contactors **LC1D09**, star-delta starter kit **LAD91217** must be ordered separately, see page B8/43.*
*(3) For mounting 3 contactors **LC1D18** or **LC1D25**, star-delta starter kit **LAD93217** must be ordered separately, see page B8/43.*
*(4) For mounting 3 contactors **LC1D●●A**, star-delta starter kit **LAD9SD3** must be ordered separately, see page B8/43.*
*(5) For mounting 3 contactors **LC1D80**, star-delta starter kit **LA9D8017** must be ordered separately, see page B8/43.*
*(6) For mounting 3 contactors **LC1D115** or **LC1D150**, see A2/13.*
(7) IrD: current in the motor windings in delta connection.

Coordination: Star-delta with Thermal magnetic circuit breaker + Contactors

Contactor: **Maximum operating rate**: 30 starts/hour - **Maximum starting time**: 30 seconds.
The coordination table is for normal starting conditions (Class 10e/ 20e). For other heavy starting applications with long start times, please contact technical support.
RE17RMMWS timer to be used for Star-Delta starter application.

90 to 250 kW at 400 V: type 2 coordination (with TeSys GV5 / GV6 circuit breakers)

Standard power ratings of 3-phase motors 50/60 Hz in category AC-3			Circuit breaker			Contactor Line (KM2) / Delta (KM3) [3]	Contactor Star (KM1) [3]
400 V			Product type [1]	Ir setting [2]	Irm [2]	Product type	
P	Ie	Iq (max)					
kW	A	kA		A	A		
90	160	70	**GV5P220●**	170	1360	**LC1G115**	**LC1D65**
110	195	70	**GV5P220●**	200	1600	**LC1G150**	**LC1D80**
110	195	70	**GV6P320●**	200	1600	**LC1G150**	**LC1D80**
132	230	70	**GV6P320●**	240	1920	**LC1G150**	**LC1D95**
160	280	70	**GV6P320●**	300	2400	**LC1G185**	**LC1G115**
200	350	70	**GV6P500●**	380	3040	**LC1G225**	**LC1G115**
220	380	70	**GV6P500●**	400	3200	**LC1G265**	**LC1G150**
250	430	70	**GV6P500●**	440	3520	**LC1G265**	**LC1G150**

(1) Product type to be completed by replacing the ● with the breaking performance code:

Rated conditional short-circuit (kA)	GV5P220● GV6P320●/GV6P500●	
Breaking performance code	**F**	**H**
400 V	36	70

90 to 450 kW at 400 V: type 2 coordination (with ComPact NSX / NS circuit breakers)

Standard power ratings of 3-phase motors 50/60 Hz in category AC-3			Circuit breaker			Contactor Line (KM2) / Delta (KM3) [3]	Contactor Star (KM1) [3]
400 V			Product type [1]	Ir setting [2]	Irm [2]	Product type	
P	Ie	Iq (max)					
kW	A	kA		A	A		
90	160	130	**NSX250● + MicroLogic 2.2 M**	170	1360	**LC1G115**	**LC1D65**
110	195	130	**NSX250● + MicroLogic 2.2 M**	200	1600	**LC1G150**	**LC1D80**
110	195	130	**NSX400● + MicroLogic 2.3 M**	200	1600	**LC1G150**	**LC1D80**
132	230	130	**NSX400● + MicroLogic 2.3 M**	240	1920	**LC1G150**	**LC1D95**
160	280	130	**NSX400● + MicroLogic 2.3 M**	300	2400	**LC1G185**	**LC1G115**
200	350	130	**NSX630● + MicroLogic 2.3 M**	380	3040	**LC1G225**	**LC1G115**
220	380	130	**NSX630● + MicroLogic 2.3 M**	400	3200	**LC1G265**	**LC1G150**
250	430	130	**NSX630● + MicroLogic 2.3 M**	440	3520	**LC1G265**	**LC1G150**
300	460	130	**NS800● + MicroLogic 5.0**	480	3840	**LC1G330**	**LC1G185**
335	575	130	**NS800● + MicroLogic 5.0**	640	5120	**LC1G400**	**LC1G225**
355	610	130	**NS800● + MicroLogic 5.0**	640	5120	**LC1G400**	**LC1G225**
400	690	130	**NS800● + MicroLogic 5.0**	720	5760	**LC1G500**	**LC1G265**
450	770	130	**NS1000● + MicroLogic 5.0**	784	6272	**LC1G500**	**LC1G330**

(1) Product type to be completed by replacing the ● with the breaking performance code:

Rated conditional short-circuit (kA)	NSX250●/ NSX400●/ NSX630●					NS800●/ NS1000●
Breaking performance code	**F**	**N**	**H**	**S**	**L**	**L**
400 V	36	50	70	100	150	150

(2) This setting is a general guidance, Ir and Irm should be adjusted according to motor characteristics and conditions of use.
(3) Refer to diagram page A5/40.

Coordination: Star-delta with Thermal magnetic circuit breaker + Contactors

Contactor: **Maximum operating rate**: 30 starts/hour - **Maximum starting time**: 30 seconds.
The coordination table is for normal starting conditions (Class 10e/ 20e). For other heavy starting applications with long start times, please contact techncial support.
RE17RMMWS timer to be used for Star-Delta starter application.

110 to 300 kW at 440 V: type 2 coordination (with TeSys GV5 / GV6 circuit breakers)

Standard power ratings of 3-phase motors 50/60 Hz in category AC-3			Circuit breaker			Contactor Line (KM2) / Delta (KM3) (3)	Contactor Star (KM1) (3)
440 V			Product type (1)	Ir setting (2)	Irm (2)	Product type	
P	Ie	Iq (max)					
kW	A	kA		A	A		
110	177	65	GV5P220●	185	1480	LC1G115	LC1D65
132	209	65	GV5P220●	210	1680	LC1G150	LC1D80
160	255	65	GV6P320●	260	2080	LC1G185	LC1G115
200	318	65	GV6P320●	320	2560	LC1G225	LC1G115
220	343	65	GV6P500●	350	2800	LC1G225	LC1G150
250	390	65	GV6P500●	400	3200	LC1G265	LC1G150
300	466	65	GV6P500●	470	3760	LC1G330	LC1G185

(1) Product type to be completed by replacing the ● with the breaking performance code:

Rated conditional short-circuit (kA)	GV5P220●		GV6P320●/GV6P500●	
Breaking performance code	F	H	F	H
440 V	35	65	30	65

110 to 450 kW at 440 V: type 2 coordination (with ComPacT NSX / NS circuit breakers)

Standard power ratings of 3-phase motors 50/60 Hz in category AC-3			Circuit breaker			Contactor Line (KM2) / Delta (KM3) (3)	Contactor Star (KM1) (3)
440 V			Product type (1)	Ir setting (2)	Irm (2)	Product type	
P	Ie	Iq (max)					
kW	A	kA		A	A		
110	177	130	NSX250● + MicroLogic 2.2 M	185	1480	LC1G115	LC1D65
132	209	130	NSX250● + MicroLogic 2.2 M	210	1680	LC1G150	LC1D80
160	255	130	NSX400● + MicroLogic 2.3 M	260	2080	LC1G185	LC1G115
200	318	130	NSX400● + MicroLogic 2.3 M	320	2560	LC1G225	LC1G115
220	343	130	NSX630● + MicroLogic 2.3 M	350	2800	LC1G225	LC1G150
250	390	130	NSX630● + MicroLogic 2.3 M	400	3200	LC1G265	LC1G150
300	466	130	NSX630● + MicroLogic 2.3 M	470	3760	LC1G330	LC1G185
335	521	130	NS800● + MicroLogic 5.0	560	4480	LC1G330	LC1G185
355	554	130	NS800● + MicroLogic 5.0	560	4480	LC1G400	LC1G225
400	627	130	NS800● + MicroLogic 5.0	640	5120	LC1G400	LC1G225
450	695	130	NS800● + MicroLogic 5.0	720	5760	LC1G500	LC1G265

(1) Product type to be completed by replacing the ● with the breaking performance code:

Rated conditional short-circuit (kA)	NSX250●					NSX400● / NSX630●					NS800●
Breaking performance code	F	N	H	S	L	F	N	H	S	L	L
440 V	35	50	65	100	130	30	42	65	100	130	130

(2) This setting is a general guidance, Ir and Irm should be adjusted according to motor characteristics and conditions of use.
(3) Refer to diagram page A5/40

Coordination: Star-delta with Thermal magnetic circuit breaker + Contactors

Contactor: **Maximum operating rate**: 30 starts/hour - **Maximum starting time**: 30 seconds.
The coordination table is for normal starting conditions (Class 10e/ 20e). For other heavy starting applications with long start times, please contact technical support.
RE17RMMWS timer to be used for Star-Delta starter application.

132 to 295 kW at 500 V: type 2 coordination (with TeSys GV5 / GV6 circuit breakers)

Standard power ratings of 3-phase motors 50/60 Hz in category AC-3			Circuit breaker			Contactor Line (KM2) / Delta (KM3) [3]	Contactor Star (KM1) [3]
500 V			Product type [1]	Ir setting [2]	Irm [2]	Product type	
P	Ie	Iq (max)					
kW	A	kA		A	A		
132	184	50	GV5P220●	185	1480	LC1G115	LC1D65
160	224	50	GV6P320●	240	1920	LC1G150	LC1D80
200	280	50	GV6P320●	300	2400	LC1G185	LC1G115
250	344	50	GV6P500●	350	2800	LC1G225	LC1G115
295	405	50	GV6P500●	440	3520	LC1G265	LC1G150

(1) Product type to be completed by replacing the ● with the breaking performance code:

Rated conditional short-circuit (kA)	GV5P220●		GV6P320●/ 500●	
Breaking performance code	F	H	F	H
500 V	30	50	25	50

132 to 425 kW at 500 V: type 2 coordination (with ComPact NSX / NS circuit breakers)

Standard power ratings of 3-phase motors 50/60 Hz in category AC-3			Circuit breaker			Contactor Line (KM2) / Delta (KM3) [3]	Contactor Star (KM1) [3]
500 V			Product type [1]	Ir setting [2]	Irm [2]	Product type	
P	Ie	Iq (max)					
kW	A	kA		A	A		
132	184	70	NSX250● + MicroLogic 2.2 M [4]	185	1480	LC1G115	LC1D65
160	224	70	NSX400● + MicroLogic 2.3 M [4]	240	1920	LC1G150	LC1D80
200	280	70	NSX400● + MicroLogic 2.3 M [4]	300	2400	LC1G185	LC1G115
250	344	70	NSX630● + MicroLogic 2.3 M [4]	350	2800	LC1G225	LC1G115
295	405	70	NSX630● + MicroLogic 2.3 M [4]	440	3520	LC1G265	LC1G150
375	516	70	NS800● + MicroLogic 5.0	560	4480	LC1G330	LC1G185
425	584	70	NS800● + MicroLogic 5.0	640	5120	LC1G400	LC1G225

(1) Product type to be completed by replacing the ● with the breaking performance code:

Rated conditional short-circuit (kA)	NSX250●					NSX400●/ NSX630●					NS800●
Breaking performance code	F	N	H	S	L	F	N	H	S	L	L
500 V	30	36	50	65	70	25	30	50	65	70	100

(2) This setting is a general guidance, Ir and Irm should be adjusted according to motor characteristics and conditions of use.
(3) Refer to diagram page A5/40.
(4) Applicable also with MicroLogic 6.2 M and 6.3 M trip units.

Coordination: Star-delta with Magnetic circuit breaker + Contactors + Thermal overload relay

1.5 to 315 kW at 400/415 V: type 1 coordination

Maximum operating rate: LC3K: 12 starts/hour; LC3D: 30 starts/hour.
Maximum starting time: LC3K and LC3D: 30 seconds.

Standard power ratings of 3-phase motors 50/60 Hz in category AC-3								Circuit breaker			Star-delta contactors	Thermal overload relay	
400/415 V				440 V				Reference	Rating	Irm (2)	Reference	Reference	Setting range
P	Ie	IrD (1)	Iq	P	Ie	IrD (1)	Iq						
kW	A	A	kA	kW	A	A	kA		A	A			A
–	–	–	–	**1.5**	3.06	1.8	50	**LC3D32A**	4	51	**LC3K06**	**LR2K0308**	1.8…2.6
1.5	3.6	2	50	**2.2**	4.42	3	50						
2.2	4.9	3	50	**3**	5.77	3	50	**GV2LE10**	6.3	78	**LC3K06**	**LR2K0310**	2.6…3.7
3	6.5	4	50	–	–	–	–	**GV2LE14**	10	138	**LC3K06**	**LR2K0312**	3.7…5.5
–	–	–	–	**4**	7.9	5	50	**GV2LE10**	6.3	78	**LC3K06**	**LR2K0312**	3.7…5.5
4	8.5	5	50	–	–	–	–	**GV2LE14**	10	138	**LC3K06**	**LR2K0312**	3.7…5.5
–	–	–	–	**5.5**	10.4	6	15	**GV2LE14**	10	138	**LC3K06**	**LR2K0314**	5.5…8
5.5	11.5	6	15	–	–	–	–	**GV2LE16**	14	170	**LC3K06**	**LR2K0314**	5.5…8
–	–	–	–	**7.5**	13.7	8	8	**GV2LE16**	14	170	**LC3K09**	**LR2K0316**	8…11.5
7.5	15.5	9	15	–	–	–	–	**GV2LE20**	18	223	**LC3K09**	**LR2K0316**	8…11.5
–	–	–	–	**9**	16.9	1	8	**GV2LE16**	14	170	**LC3D12A**	**LRD16**	9…13
9	18.1	10	15	–	–	–	–	**GV2LE22**	25	327	**LC3K12**	**LR2K0316**	8…11.5
–	–	–	–	**11**	20.1	12	8	**GV2LE20**	18	223	**LC3K12**	**LR2K0321**	10…14
11	22	12	15	–	–	–	–	**GV2LE22**	25	327	**LC3K12**	**LR2K0321**	10…14
–	–	–	–	**15**	26.5	15	6	**GV2LE22**	25	327	**LC3D18A**	**LRD21**	12…18
15	29	16	10	–	–	–	–	**GV2LE32**	32	384	**LC3D18A**	**LRD21**	12…18
18.5	35	20	50	**18.5**	32.8	19	50	**GV3L40**	40	560	**LC3D18A**	**LRD22**	16…24
22	41	24	50	**22**	39	23	50	**GV3L50**	50	700	**LC3D32A**	**LRD32**	23…32
–	–	–	–	**30**	51.5	30	50	**GV3L65**	65	910	**LC3D32A**	**LRD32**	23…32
30	55	33	50	–	–	–	–	**GV3L65**	65	910	**LC3D32A**	**LRD35**	30…38
–	–	–	–	**37**	64	37	50	**GV3L65**	65	910	3 x **LC1D40A** (4)	**LRD340**	30…40
37	66	40	100	–	–	–	–	**GV4L80**	80	640	3 x **LC1D40A** (4)	**LRD350**	37…50
–	–	–	–	**37**	64	37	70	**GV4L80**	80	640	3 x **LC1D40A** (4)	**LRD340**	30…40
–	–	–	–	**45**	76	44	70	**GV4L80**	80	800	2 x **LC1D50A** +1 x **LC1D40A** (4)	**LRD350**	37…50
45	80	47	100	–	–	–	–	**GV4L115**	115	805	2 x **LC1D50A** +1 x **LC1D40A** (4)	**LRD350**	37…50
55	97	58	100	**55**	90	52	70	**GV4L115**	115	805	2 x **LC1D50A** +1 x **LC1D40A** (4)	**LRD365**	48…65
–	–	–	–	**75**	125	72	(3)	**NSX160●MA** (3)	150	1200	**LC3D80**	**LRD3363**	63…80
75	132	78	(3)	–	–	–	–	**NSX160●MA** (3)	150	1200	**LC3D80**	**LRD3363**	63…80
–	–	–	–	**90**	146	85	(3)	**NSX160●MA** (3)	150	1200	**LC3D115**	**LRD4365**	80…104
90	160	96	(3)	**110**	178	103	(3)	**NSX250●MA** (3)	220	1760	**LC3D115**	**LRD4365**	80…104
–	–	–	–	**132**	215	125	(3)	**NSX250●MA** (3)	220	1760	**LC3D150**	**LRD4369**	110…140
110	195	116	(3)	–	–	–	–	**NSX250●MA** (3)	220	1760	**LC3D115**	**LRD4367**	95…120
–	–	–	–	**160**	256	148	(3)	**NSX400● + Micrologic 1.3M** (3)	320	2240	**LC3D150**	**LR9D5369**	90…150
–	–	–	–	**200**	321	186	(3)	(5)	–	–	(5)	(5)	–
132	230	139	(3)	–	–	–	–	(5)	–	–	(5)	(5)	–
160	280	165	(3)	–	–	–	–	(5)	–	–	(5)	(5)	–
200	350	204	(3)	**220**	353	204	(3)	(5)	–	–	(5)	(5)	–
220	388	225	(3)	**250**	401	233	(3)	(5)	–	–	(5)	(5)	–
280	480	278	(3)	–	–	–	–	(5)	–	–	(5)	(5)	–
–	–	–	–	**315**	505	295	(3)	(5)	–	–	(5)	(5)	–
315	540	322	(3)	**355**	518	300	(3)	(5)	–	–	(5)	(5)	–
–	–	–	–	**375**	575	334	(3)	(5)	–	–	(5)	(5)	–

(1) IrD: current in the motor windings in delta connection.
(2) Irm: setting current of the magnetic trip.
(3) Reference to be completed by replacing the ● with the breaking performance code:

Breaking performance Iq (kA)	NSX100●MA		NSX160●MA, NSX250●MA		NSX400●, NSX630●		NS800●	
400/415 V	36	70	36	70	70	150	70	150
440 V	35	65	35	65	65	130	65	130
Code	**F**	**H**	**F**	**H**	**H**	**L**	**H**	**L**

*(4) For mounting 3 contactors **LC1D●●A**, star-delta starter kit **LAD9SD3** must be ordered separately, see page B8/43.*
(5) Please consult your Regional Sales Office.

Coordination: Star-delta with Magnetic circuit breaker + Contactors + Thermal overload relay

1.5 to 250 kW at 400/415 V: type 2 coordination

Maximum operating rate: LC3D: 30 starts/hour.
Maximum starting time: LC3D: 30 seconds.

Standard power ratings of 3-phase motors 50/60 Hz in category AC-3						Circuit breaker			Star-delta contactors	Thermal overload relay	
400/415 V			440 V			Reference	Rating	Irm (1)	Reference	Reference	Setting range
P	Ie	Iq	P	Ie	Iq						
kW	A	kA	kW	A	kA		A	A			A
1.5	3.6	130	**1.5**	3.06	130	**GV2L08**	4	51	3 x **LC1D09**	**LRD08**	2.5…4
2.2 **3**	4.9 6.5	130 130	**2.2** **3**	4.42 5.77	130 130	**GV2L10**	6.3	78	3 x **LC1D09**	**LRD10**	4…6
–	–	–	**4**	7.9	20	**GV2L14**	10	138	3 x **LC1D18**	**LRD14**	7…10
4	8.5	130	–	–	–	**GV2L14**	10	138	3 x **LC1D18**	**LRD16**	9…13
5.5	11.5	50	**5.5**	10.4	20	**GV2L16**	14	170	3 x **LC1D25**	**LRD16**	9…13
7.5	15.5	50	**7.5**	13.7	20	**GV2L20**	18	223	3 x **LC1D25**	**LRD21**	12…18
–	–	–	**9**	16.9	20	**GV2L22**	25	327	3 x **LC1D25**	**LRD21**	12…18
9 **11**	18.1 22	50 50	– **11**	– 20.1	– 20	**GV2L22**	25	327	3 x **LC1D25**	**LRD22**	16…24
15	29	50	**15**	26.5	50	**GV3L32**	32	448	3 x **LC1D40A** (2)	**LRD332**	23…32
18.5	35	50	–	–	–	**GV3L40**	40	560	2 x **LC1D50A** +1 x **LC1D40A** (2)	**LRD340**	30…40
–	–	–	**18.5**	32.8	50	**GV3L40**	40	560	2 x **LC1D65A** +1 x **LC1D40A** (2)	**LRD340**	30…40
22	41	50	–	–	–	**GV3L50**	50	700	2 x **LC1D50A** +1 x **LC1D40A** (2)	**LRD350**	37…50
–	–	–	**22**	39	50	**GV3L50**	50	700	2 x **LC1D65A** +1 x **LC1D40A** (2)	**LRD350**	37…50
30	55	50	**30**	51.5	50	**GV3L65**	65	910	2 x **LC1D65A** +1 x **LC1D40A** (2)	**LRD365**	48…65
–	–	–	**37**	64	50	**GV3L65**	65	910	3 x **LC1D80**	**LRD3359**	48…65
37	66	100	–	–	–	**GV4L80**	80	640	3 x **LC1D80**	**LRD3363**	63…80
–	–	–	**45**	76	70	**GV4L80**	80	800	3 x **LC1D80**	**LRD3363**	63…80
45	80	100	–	–	–	**GV4L115**	115	805	3 x **LC1D115**	**LR9D5367**	60…100
–	–	–	**55**	90	70	**GV4L115**	115	920	3 x **LC1D115**	**LR9D5367**	60…100
55	97	100	–	–	–	**GV4L115**	115	920	3 x **LC1D115**	**LR9D5369**	90…150
55	97	(3)	–	–	–	**NSX160●MA** (3)	150	1200	3 x **LC1D115**	**LR9D5369**	90…150
–	–	–	**75**	125	(3)	**NSX160●MA** (3)	150	1200	3 x **LC1D150**	**LR9D5369**	90…150
75	132	(3)	**90**	146	(3)	**NSX160●MA** (3)	150	1200	3 x **LC1D150**	**LR9D5369**	90…150

(1) Irm: setting current of the magnetic trip.
*(2) For mounting 3 contactors **LC1D●●A**, star-delta starter kit **LAD9SD3** must be ordered separately, see page B8/43.*
(3) Reference to be completed by replacing the ● with the breaking performance code:

Breaking performance Iq (kA)	NSX100●MA		NSX160●MA, NSX250●MA		NSX400●, NSX630●	
400/415 V	36	70	36	70	70	150
440 V	35	65	35	65	65	130
Code	**F**	**H**	**F**	**H**	**H**	**L**

Coordination: Star-delta with Magnetic circuit breaker + Contactors + Overload relay

Contactor: **Maximum operating rate**: 30 starts/hour - **Maximum starting time**: 30 seconds.
The coordination table is for normal starting conditions (Class 10e/ 20e). For other heavy starting applications with long start times, please contact techncial support.
RE17RMMWS timer to be used for Star-Delta starter application.

90 to 450 kW at 400 V: type 2 coordination (with ComPacT NSX/NS circuit breakers and LR9G overload relays)

Standard power ratings of 3-phase motors 50/60 Hz in category AC-3			Circuit breaker		Contactor Line (KM2) / Delta (KM3) [3]	Contactor Star (KM1) [3]	Thermal overload relay	
400 V			Product type [1]	Irm [2]	Product type		Product type	Ir setting [2]
P	Ie	Iq (max)						
kW	A	kA		A				A
90	160	130	NSX250● + MA	1980	LC1G115	LC1D65	LR9G115	92
110	195	130	NSX250● + MA	1980	LC1G150	LC1D80	LR9G225	113
110	195	130	NSX400● + MicroLogic 1.3 M	1920	LC1G150	LC1D80	LR9G225	113
132	230	130	NSX400● + MicroLogic 1.3 M	1920	LC1G150	LC1D80	LR9G225	133
160	280	130	NSX400● + MicroLogic 1.3 M	2560	LC1G185	LC1G115	LR9G225	162
200	350	130	NSX630● + MicroLogic 1.3 M	3000	LC1G225	LC1G150	LR9G225	202
220	380	130	NSX630● + MicroLogic 1.3 M	3500	LC1G265	LC1G150	LR9G500	219
250	430	130	NSX630● + MicroLogic 1.3 M	3500	LC1G265	LC1G150	LR9G500	248
300	460	130	NS800● + MicroLogic 5.0 LR OFF	4000	LC1G330	LC1G185	LR9G500	266
335	575	130	NS800● + MicroLogic 5.0 LR OFF	4800	LC1G400	LC1G225	LR9G500	332
355	610	130	NS800● + MicroLogic 5.0 LR OFF	5600	LC1G400	LC1G225	LR9G500	352
400	627	130	NS800● + MicroLogic 5.0 LR OFF	5600	LC1G400	LC1G225	LR9G500	362
450	695	130	NS800● + MicroLogic 5.0 LR OFF	6400	LC1G500	LC1G265	LR9G500	401

(1) Product type to be completed by replacing the ● with the breaking performance code:

Rated conditional short-circuit (kA)	NSX250●/ NSX400●/ NSX630●					NS800●
Breaking performance code	F	N	H	S	L	L
400 V	36	50	70	100	130	150

110 to 355 kW at 440 V: type 2 coordination (with ComPacT NSX/NS circuit breakers and LR9G overload relays)

Standard power ratings of 3-phase motors 50/60 Hz in category AC-3			Circuit breaker		Contactor Line (KM2) / Delta (KM3) [3]	Contactor Star (KM1) [3]	Thermal overload relay	
440 V			Product type [1]	Irm [2]	Product type		Product type	Ir setting [2]
P	Ie	Iq (max)						
kW	A	kA		A				A
110	177	130	NSX250● + MA	1980	LC1G115	LC1D65	LR9G115	102
132	209	130	NSX250● + MA	1980	LC1G150	LC1D80	LR9G225	121
160	255	130	NSX400● + MicroLogic 1.3 M	2240	LC1G185	LC1D95	LR9G225	147
200	318	130	NSX400● + MicroLogic 1.3 M	2560	LC1G225	LC1G115	LR9G225	184
220	343	130	NSX630● + MicroLogic 1.3 M	3000	LC1G225	LC1G150	LR9G225	198
250	390	130	NSX630● + MicroLogic 1.3 M	3500	LC1G265	LC1G150	LR9G500	225
300	466	130	NSX630● + MicroLogic 1.3 M	4000	LC1G330	LC1G185	LR9G500	269
335	521	130	NS800● + MicroLogic 5.0 LR OFF	4800	LC1G330	LC1G185	LR9G500	301
355	554	130	NS800● + MicroLogic 5.0 LR OFF	4800	LC1G400	LC1G225	LR9G500	320

(1) Product type to be completed by replacing the ● with the breaking performance code:

Rated conditional short-circuit (kA)	NSX250●					NSX400●/ NSX630●				NS800L
Breaking performance code	F	N	H	S	L	F	N	S	L	L
440 V	35	50	65	100	130	30	42	100	130	130

(2) This setting is a general guidance, Ir and Irm should be adjusted according to motor characteristics and conditions of use.
(3) Refer to diagram page A5/40.

Coordination: Star-delta with Magnetic circuit breaker + Contactors + Overload relay

Contactor: **Maximum operating rate**: 30 starts/hour - **Maximum starting time**: 30 seconds.
The coordination table is for normal starting conditions (Class 10e/ 20e). For other heavy starting applications with long start times, please contact techncial support.
RE17RMMWS timer to be used for Star-Delta starter application.

132 to 425 kW at 500 V: type 2 coordination (with ComPacT NSX/NS circuit breakers and LR9G overload relays)

Standard power ratings of 3-phase motors 50/60 Hz in category AC-3			Circuit breaker		Contactor Line (KM2) / Delta (KM3) [3]	Contactor Star (KM1) [3]	Thermal overload relay	
500 V			Product type [1]	Irm [2]	Product type		Product type	Ir setting [2]
P	Ie	Iq (max)						
kW	A	kA		A				A
132	184	70	NSX400● + MicroLogic 1.3 M	1600	LC1G115	LC1D65	LR9G225	106
160	224	70	NSX400● + MicroLogic 1.3 M	1920	LC1G150	LC1D80	LR9G225	129
200	280	70	NSX400● + MicroLogic 1.3 M	2560	LC1G185	LC1G115	LR9G225	162
250	344	70	NSX630● + MicroLogic 1.3 M	3000	LC1G225	LC1G150	LR9G225	199
295	405	70	NSX630● + MicroLogic 1.3 M	3500	LC1G265	LC1G150	LR9G500	234
375	516	70	NS800● + MicroLogic 5.0	4800	LC1G330	LC1G185	LR9G500	298
425	584	70	NS800● + MicroLogic 5.0	4800	LC1G400	LC1G185	LR9G500	337

(1) Product type to be completed by replacing the ● with the breaking performance code:

Rated conditional short-circuit (kA)	NSX400●/ NSX630●					NS800●
Breaking performance code	F	N	H	S	L	L
500 V	25	30	50	65	70	100

(2) This setting is a general guidance, Ir and Irm should be adjusted according to motor characteristics and conditions of use.
(3) Refer to diagram page A5/40.

Coordination: Star-Delta motor starter - Common circuit diagrams

Star-Delta motor 'Power' circuit diagram

Thermal magnetic circuit breaker + contactors

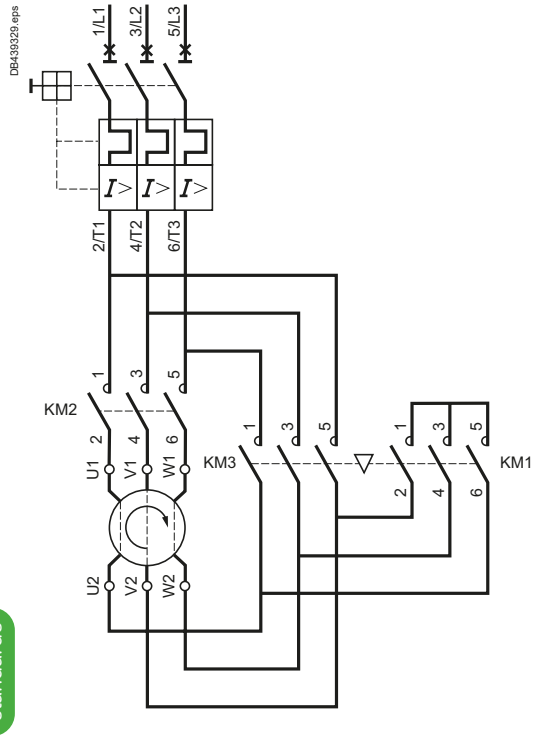

Magnetic circuit breaker + contactors + overload relay

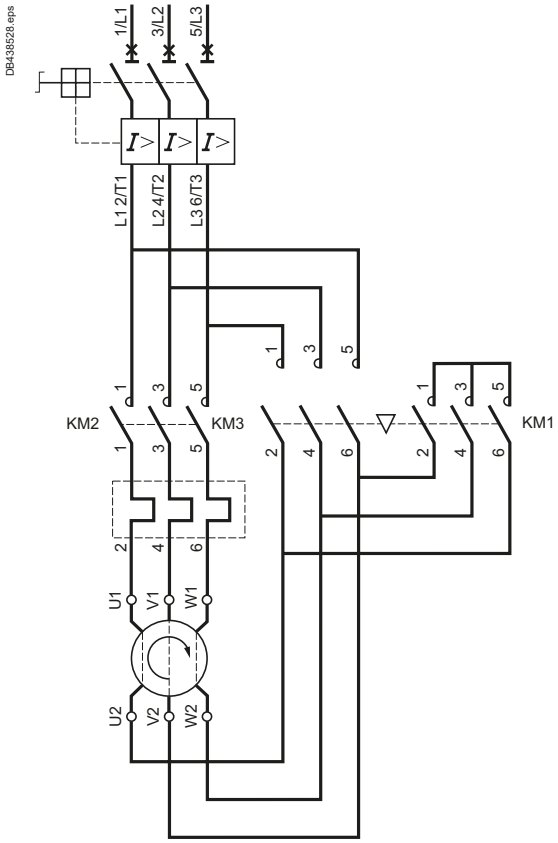

Star-Delta Motor 'Control' circuit diagram

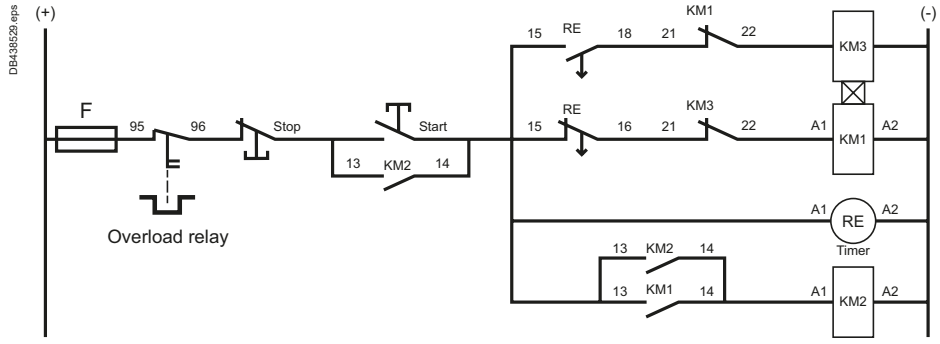

Recommended timing relay (RE): Zelio Timer ref. **RE17RMMWS** (12...240 V AC/DC 50/60 Hz – 8 A AC/DC contacts)

275 to 1000 A up to 690 V: type 2 coordination (with ComPacT NSX or NS circuit breakers)

Current ratings of 3-phase loads 50/60 Hz in category AC-1		Circuit breaker		Contactor
Up to 690 V, temperature ≤ 40 °C		Product type (1)	In	Product type
Ie	Iq (max)			
A	kA		A	
275	100	NSX400● + MicroLogic 2.3	400	LC1G150
305	100	NSX400● + MicroLogic 2.3	400	LC1G185
330	100	NSX400● + MicroLogic 2.3	400	LC1G225
385	100	NSX400● + MicroLogic 2.3	400	LC1G265
440	100	NSX630● + MicroLogic 2.3	630	LC1G330
550	100	NSX630● + MicroLogic 2.3	630	LC1G400
700	75	NS800● + MicroLogic 5.0	800	LC1G500
1000	100 (2)	NS1000● + MicroLogic 5.0	1000	LC1G630

(1) Product type to be completed by replacing the ● with the breaking performance code:

Rated conditional short-circuit (kA)	NSX400●/ NSX630●								NS800●/NS1000●	
Breaking performance code	F	N	H	S	L	R	HB1	HB2	L	LB
400 V	36	50	70	100	150	200	-	-	150	200
440 V	30	42	65	90	130	200	-	-	130	200
500 V	25	30	50	65	70	80	85	100	100	100
690 V	10	10	20	25	35	45	75	100	-	75

(2) Up to 500 V AC.

Resistive load protection and control
Coordination: Fuses (NFC, DIN type gG) + Contactors

275 to 1050 A up to 690 V: type 2 coordination (with NFC, DIN, type gG fuses)

Current ratings of 3-phase loads 50/60 Hz in category AC-1		Switch-disconnector	gG fuse		Contactor
Up to 690 V, temperature ≤ 40 °C		Product type	Size	Rating	Product type
Ie	Iq (max)				
A	kA			A	
250	80	**GS●QQ**	2	315	**LC1G115**
275	80	**GS●QQ**	2	315	**LC1G150**
305	80	**GS●QQ**	2	315	**LC1G185**
330	80	**GS●QQ**	2	400	**LC1G225**
385	80	**GS●QQ**	2	400	**LC1G265**
440	80	**GS●S**	3	500	**LC1G330**
550	80	**GS●S**	3	630	**LC1G400**
700	80	**GS●V**	4	800	**LC1G500**
1000	80	**GS●V**	4	1000	**LC1G630**
1050	80	**GS●V**	4	1250	**LC1G800**

IEC - Type 1 or 2 coordination with fuses - 690 V

690 V - Type 1 or 2 coordination with fuses

Applications with 3-phase motors 50-60 Hz in category AC-3	aM fuses	Standard Starters SIL Starters Power Inteface Modules	
690 V	**Rating**	**References**	**Setting range**
Iq			
kA	**A**		**A**
80	≤10	**TPRST009** **TPRSS009** **TPRPM009**	0.18-9
	≤25	**TPRST025** **TPRSS025** -	0.5-25
	≤40	**TPRST038** **TPRSS038** **TPRPM038**	0.76-38
	≤80	**TPRST065** **TPRSS065** -	3.25-65
	≤80	**TPRST080** **TPRSS080** **TPRPM080**	4-80

0.06 to 22 kW at 230 V: Type 1 coordination

Applications power ratings of 3-phase motors 50-60 Hz in category AC-3			Circuit breaker (Trip class 5 to 15)	Standard Starters SIL Starters Power Inteface Modules	
230 V			References	References	Setting range
P	Ie	Iq			
kW	A	kA			A
0.06	0.35	100	**GV2L03**	**TPRST009 TPRSS009 TPRPM009**	0.18-9
0.09	0.52	100	**GV2L04**	**TPRST009 TPRSS009 TPRPM009**	0.18-9
0.12	0.7	100	**GV2L05**	**TPRST009 TPRSS009 TPRPM009**	0.18-9
0.18	1	100	**GV2L06**	**TPRST009 TPRSS009 TPRPM009**	0.18-9
0.25	1.5	100	**GV2L06**	**TPRST009 TPRSS009 TPRPM009**	0.18-9
0.37	1.9	100	**GV2L07**	**TPRST009 TPRSS009 TPRPM009**	0.18-9
0.55	2.6	100	**GV2L08**	**TPRST009 TPRSS009 TPRPM009**	0.18-9
0.75	3.3	100	**GV2L08**	**TPRST009 TPRSS009 TPRPM009**	0.18-9
1.1	4.7	100	**GV2L10**	**TPRST009 TPRSS009 TPRPM009**	0.18-9
1.5	6.3	100	**GV2L14**	**TPRST009 TPRSS009 TPRPM009**	0.18-9
2.2	8.5	100	**GV2L14**	**TPRST009 TPRSS009 TPRPM009**	0.18-9
3	11.3	100	**GV2L16**	**TPRST025 TPRSS025 TPRPM038**	0.5-25 / 0.76-38
4	15	100	**GV2L20**	**TPRST025 TPRSS025 TPRPM038**	0.5-25 / 0.76-38
5.5	20	50	**GV2L22**	**TPRST025 TPRSS025 TPRPM038**	0.5-25 / 0.76-38
7.5	27	50	**GV2L32**	**TPRST038 TPRSS038 TPRPM038**	0.76-38
9	32	100	**GV3L40**	**TPRST038 TPRSS038 TPRPM038**	0.76-38
11	38	100	**GV3L40**	**TPRST065 TPRSS065 TPRPM080**	3.25-65 / 4-80
15	51	100	**GV3L65**	**TPRST065 TPRSS065 TPRPM080**	3.25-65 / 4-80
18.5	61	100	**GV3L65**	**TPRST065 TPRSS065 TPRPM080**	3.25-65 / 4-80
22	72	100	**GV3L73**	**TPRPM080**	4-80

IEC - Type 2 coordination with circuit breakers - 230 V

0.06 to 22 kW at 230 V: Type 2 coordination

Applications power ratings of 3-phase motors 50-60 Hz in category AC-3			Circuit breaker (Trip class 5 to 15)	Standard Starters SIL Starters	
230 V			References	References	Setting range
P	Ie	Iq			
kW	A	kA			A
0.06	0.35	100	**GV2L03**	**TPRST009 TPRSS009**	0.18-9
0.09	0.52	100	**GV2L04**	**TPRST009 TPRSS009**	0.18-9
0.12	0.7	100	**GV2L05**	**TPRST009 TPRSS009**	0.18-9
0.18	1	100	**GV2L06**	**TPRST009 TPRSS009**	0.18-9
0.25	1.5	100	**GV2L06**	**TPRST009 TPRSS009**	0.18-9
0.37	1.9	100	**GV2L07**	**TPRST009 TPRSS009**	0.18-9
0.55	2.6	100	**GV2L08**	**TPRST009 TPRSS009**	0.18-9
0.75	3.3	100	**GV2L08**	**TPRST025 TPRSS025**	0.5-25
1.1	4.7	100	**GV2L10**	**TPRST025 TPRSS025**	0.5-25
1.5	6.3	100	**GV2L14**	**TPRST025 TPRSS025**	0.5-25
2.2	8.5	100	**GV2L14**	**TPRST025 TPRSS025**	0.5-25
3	11.3	100	**GV2L16**	**TPRST025 TPRSS025**	0.5-25
4	15	100	**GV2L20**	**TPRST025 TPRSS025**	0.5-25
5.5	20	50	**GV2L22**	**TPRST025 TPRSS025**	0.5-25
7.5	27	50	**GV2L32**	**TPRST038 TPRSS038**	0.76-38
9	32	100	**GV3L40**	**TPRST038 TPRSS038**	0.76-38
11	38	100	**GV3L40**	**TPRST065 TPRSS065**	3.25-65
15	51	100	**GV3L65**	**TPRST065 TPRSS065**	3.25-65
18.5	61	100	**GV3L65**	**TPRST065 TPRSS065**	3.25-65

0.06 to 37 kW at 400/415 - 440 - 500 V: Type 1 coordination

Applications power ratings of 3-phase motors 50-60 Hz in category AC-3									Circuit breaker (Trip class 5 to 15)	Standard Starters SIL Starters Power Inteface Modules	
400/415 V			440 V			500 V			References	References	Setting range
P	Ie	Iq	P	Ie	Iq	P	Ie	Iq			
kW	A	kA	kW	A	kA	kW	A	kA			A
0.06	0.2	100	0.06	0.18	100	-	-	-	**GV2L03**	**TPRST009 TPRSS009 TPRPM009**	0.18-9
0.09	0.3	100	0.09	0.27	100	-	-	-			
0.12	0.44	100	0.12	0.4	100	-	-	-	**GV2L04**	**TPRST009 TPRSS009 TPRPM009**	0.18-9
0.18	0.6	100	0.18	0.55	100	-	-	-			
0.25	0.85	100	0.25	0.77	100	-	-	-	**GV2L05**	**TPRST009 TPRSS009 TPRPM009**	0.18-9
0.37	1.1	100	-	-	-	0.37	0.88	100			
-	-	-	0.37	1	100	-	-	-	**GV2L06**	**TPRST009 TPRSS009 TPRPM009**	0.18-9
0.55	1.5	100	0.55	1.4	100	0.55	1.2	100			
-	-	-	-	-	-	0.75	1.5	100	**GV2L07**	**TPRST009 TPRSS009 TPRPM009**	0.18-9
0.75	1.9	100	0.75	1.7	100	-	-	-			
1.1	2.7	100	-	-	-	1.1	2.2	100			
-	-	-	1.1	2.4	100	-	-	-	**GV2L08**	**TPRST009 TPRSS009 TPRPM009**	0.18-9
1.5	3.6	100	1.5	3.3	100	1.5	2.9	100			
2.2	4.9	100	2.2	4.5	100	2.2	3.9	100	**GV2L10**	**TPRST009 TPRSS009 TPRPM009**	0.18-9
-	-	-	3	5.9	100	3	5.2	100			
3	6.5	100	-	-	-	-	-	-	**GV2L14**	**TPRST009 TPRSS009 TPRPM009**	0.18-9
4	8.5	100	4	7.7	20	4	6.8	10			
-	-	-	-	-	-	5.5	9.2	10			
5.5	11.5	50	5.5	10.5	20	-	-	-	**GV2L16**	**TPRST025 TPRSS025 TPRPM038**	0.5-25 / 0.76-38
-	-	-	-	-	-	7.5	12.4	10			
7.5	15.5	50	7.5	14.1	20	-	-	-	**GV2L20**	**TPRST025 TPRSS025 TPRPM038**	0.5-25 / 0.76-38
-	-	-	9	16.5	20	9	13.9	10			
9	18.1	50	-	-	-	-	-	-	**GV2L22**	**TPRST025 TPRSS025 TPRPM038**	0.5-25 / 0.76-38
11	22	50	11	20	20	11	17.6	10			
-	-	-	-	-	-	15	23	10			
15	29	50	15	26.4	20	-	-	-	**GV2L32**	**TPRST038 TPRSS038 TPRPM038**	0.76-38
-	-	-	-	-	-	18.5	28	10			
18.5	35	50	18.5	31.8	50	-	-	-	**GV3L40**	**TPRST065 TPRSS065 TPRPM080**	3.25-65 / 4-80
-	-	-	-	-	-	22	33	12			
22	41	50	22	37.3	50	-	-	-	**GV3L50**	**TPRST065 TPRSS065 TPRPM080**	3.25-65 / 4-80
-	-	-	-	-	-	30	44	12			
30	55	50	30	50	50	-	-	-	**GV3L65**	**TPRST065 TPRSS065 TPRPM080**	3.25-65 / 4-80
-	-	-	37	60	50	37	53	12			
37	66	50	-	-	-	-	-	-	**GV3L73**	**TPRST065 TPRSS065 TPRPM080**	3.25-65 / 4-80

IEC - Type 2 coordination with circuit breakers - 400/415 - 440 - 500 V

0.06 to 37 kW at 400/415 - 440 - 500 V: Type 2 coordination

Applications power ratings of 3-phase motors 50-60 Hz in category AC-3									Circuit breaker (Trip class 5 to 15)	Standard Starters SIL Starters	
400/415 V			440 V			500 V			References	References	Setting range
P	Ie	Iq	P	Ie	Iq	P	Ie	Iq			
kW	A	kA	kW	A	kA	kW	A	kA			A
0.06	0.2	100	0.06	0.18	100	-	-	-	**GV2L03**	**TPRST009 TPRSS009**	0.18-9
0.09	0.3	100	0.09	0.27	100	-	-	-			
0.12	0.44	100	0.12	0.4	100	-	-	-	**GV2L04**	**TPRST009 TPRSS009**	0.18-9
0.18	0.6	100	0.18	0.55	100	-	-	-			
0.25	0.85	100	0.25	0.77	100	-	-	-	**GV2L05**	**TPRST009 TPRSS009**	0.18-9
0.37	1.1	100	-	-	-	0.37	0.88	100			
-	-	-	0.37	1	100	-	-	-	**GV2L06**	**TPRST009 TPRSS009**	0.18-9
0.55	1.5	100	0.55	1.4	100	0.55	1.2	100			
-	-	-	-	-	-	0.75	1.5	100	**GV2L07**	**TPRST009 TPRSS009**	0.18-9
0.75	1.9	100	0.75	1.7	100	-	-	-			
						1.1	2.2	100			
1.1	2.7	100	-	-	-	-	-	-	**GV2L07**	**TPRST025 TPRSS025**	0.5-25
-	-	-	1.1	2.4	100	-	-	-	**GV2L08**	**TPRST009 TPRSS009**	0.18-9
-	-	-	-	-	-	1.5	2.9	100			
1.5	3.6	100	1.5	3.3	100	-	-	-	**GV2L08**	**TPRST025 TPRSS025**	0.5-25
2.2	4.9	100	2.2	4.5	100	2.2	3.9	100	**GV2L10**	**TPRST025 TPRSS025**	0.5-25
-	-	-	3	5.9	100	3	5.2	100			
3	6.5	100	-	-	-	-	-	-	**GV2L14**	**TPRST025 TPRSS025**	0.5-25
4	8.5	100	4	7.7	20	4	6.8	10			
-	-	-	-	-	-	5.5	9.2	10			
5.5	11.5	50	5.5	10.5	20	-	-	-	**GV2L16**	**TPRST025 TPRSS025**	0.5-25
-	-	-	-	-	-	7.5	12.4	10			
7.5	15.5	50	7.5	14.1	20	-	-	-	**GV2L20**	**TPRST025 TPRSS025**	0.5-25
-	-	-	9	16.5	20	9	13.9	10			
9	18.1	50	-	-	-	-	-	-	**GV2L22**	**TPRST025 TPRSS025**	0.5-25
11	22	50	11	20	20	11	17.6	10			
-	-	-	-	-	-	15	23	10			
15	29	50	15	26.4	20	-	-	-	**GV2L32**	**TPRST038 TPRSS038**	0.76-38
-	-	-	-	-	-	18.5	28	10			
18.5	35	50	18.5	31.8	50	-	-	-	**GV3L40**	**TPRST065 TPRSS065**	3.25-65
-	-	-	-	-	-	22	33	12			
22	41	50	22	37.3	50	-	-	-	**GV3L50**	**TPRST065 TPRSS065**	3.25-65
-	-	-	-	-	-	30	44	12			
30	55	50	30	50	50	-	-	-	**GV3L65**	**TPRST065 TPRSS065**	3.25-65
-	-	-	37	60	50	37	53	12			
37	66	50	-	-	-	-	-	-	**GV3L73**	**TPRST065 TPRSS065**	3.25-65

0.06 to 37 kW at 690 V: Type 1 coordination

Applications power ratings of 3-phase motors 50-60 Hz in category AC-3			Circuit breaker (Trip class 5 to 15)	Standard Starters SIL Starters Power Inteface Modules	
690 V			References	References	Setting range
P	Ie	Iq			
kW	A	kA			A
0.37	0.64	100	**GV2L05**	**TPRST009 TPRSS009 TPRPM009**	0.18-9
0.55	0.87	4	**GV2L05**	**TPRST009 TPRSS009 TPRPM009**	0.18-9
0.75	1.1	4	**GV2L06**	**TPRST009 TPRSS009 TPRPM009**	0.18-9
1.1	1.6	4	**GV2L07**	**TPRST009 TPRSS009 TPRPM009**	0.18-9
1.5	2.1	4	**GV2L07**	**TPRST009 TPRSS009 TPRPM009**	0.18-9
2.2	2.8	4	**GV2L08**	**TPRST009 TPRSS009 TPRPM009**	0.18-9
3	3.8	4	**GV2L08**	**TPRST009 TPRSS009 TPRPM009**	0.18-9
4	4.9	4	**GV2L10**	**TPRST009 TPRSS009 TPRPM009**	0.18-9
5.5	6.7	4	**GV2L14**	**TPRST009 TPRSS009 TPRPM009**	0.18-9
7.5	8.9	4	**GV2L14**	**TPRST025 TPRSS025 TPRPM038**	0.5-25 / 0.76-38
9	10.5	4	**GV2L16**	**TPRST025 TPRSS025 TPRPM038**	0.5-25 / 0.76-38
11	12.8	4	**GV2L16**	**TPRST025 TPRSS025 TPRPM038**	0.5-25 / 0.76-38
15	17	4	**GV2L20**	**TPRST025 TPRSS025 TPRPM038**	0.5-25 / 0.76-38
18.5	21	4	**GV2L22**	**TPRST038 TPRSS038 TPRPM038**	0.76-38
22	24	4	**GV2L22**	**TPRST065 TPRSS065 TPRPM080**	3.25-65 / 4-80
30	32	6	**GV3L40**	**TPRST065 TPRSS065 TPRPM080**	3.25-65 / 4-80
37	39	6	**GV3L50**	**TPRST065 TPRSS065 TPRPM080**	3.25-65 / 4-80

IEC - Type 2 coordination with circuit breakers - 690 V

0.06 to 37 kW at 690 V: Type 2 coordination

Applications power ratings of 3-phase motors 50-60 Hz in category AC-3			Circuit breaker (Trip class 5 to 15)	Standard Starters SIL Starters	
690 V			References	References	Setting range
P	Ie	Iq			
kW	A	kA			A
0.37	0.64	100	**GV2L05**	**TPRST009 TPRSS009**	0.18-9
0.55	0.87	4	**GV2L05**	**TPRST009 TPRSS009**	0.18-9
0.75	1.1	4	**GV2L06**	**TPRST009 TPRSS009**	0.18-9
1.1	1.6	4	**GV2L07**	**TPRST009 TPRSS009**	0.18-9
1.1	1.6	50	**GV2L07 + LA9LB920**	**TPRST025 TPRSS025**	0.5-25
1.5	2.1	4	**GV2L07**	**TPRST009 TPRSS009**	0.18-9
1.5	2.1	50	**GV2L07 + LA9LB920**	**TPRST025 TPRSS025**	0.5-25
2.2	2.8	4	**GV2L08**	**TPRST025 TPRSS025**	0.5-25
2.2	2.8	50	**GV2L08 + LA9LB920**	**TPRST025 TPRSS025**	0.5-25
3	3.8	4	**GV2L08**	**TPRST025 TPRSS025**	0.5-25
3	3.8	50	**GV2L08 + LA9LB920**	**TPRST025 TPRSS025**	0.5-25
4	4.9	4	**GV2L10**	**TPRST025 TPRSS025**	0.5-25
4	4.9	50	**GV2L10 + LA9LB920**	**TPRST025 TPRSS025**	0.5-25
5.5	6.7	4	**GV2L14**	**TPRST025 TPRSS025**	0.5-25
5.5	6.7	50	**GV2L14 + LA9LB920**	**TPRST025 TPRSS025**	0.5-25
7.5	8.9	4	**GV2L14**	**TPRST025 TPRSS025**	0.5-25
7.5	8.9	50	**GV2L14 + LA9LB920**	**TPRST025 TPRSS025**	0.5-25
9	10.5	4	**GV2L16**	**TPRST025 TPRSS025**	0.5-25
11	12.8	4	**GV2L16**	**TPRST025 TPRSS025**	0.5-25
11	12.8	3	**GV3L18 + LA9LB920**	**TPRST038 TPRSS038**	0.76-38
15	17	4	**GV2L20**	**TPRST025 TPRSS025**	0.5-25
15	17	3	**GV2L22 + LA9LB920**	**TPRST038 TPRSS038**	0.76-38
18.5	21	4	**GV2L22**	**TPRST038 TPRSS038**	0.76-38
18.5	21	3	**GV3L25 + LA9LB920**	**TPRST065 TPRSS065**	3.25-65
22	24	4	**GV2L22**	**TPRST065 TPRSS065**	3.25-65
22	24	3	**GV2L32 + LA9LB920**	**TPRST065 TPRSS065**	3.25-65
30	32	6	**GV3L40**	**TPRST065 TPRSS065**	3.25-65
37	39	6	**GV3L50**	**TPRST065 TPRSS065**	3.25-65

UL - SCCR Ratings

Short Circuit Current Ratings (SCCR)

UL File E39281 and File E48539
Suitable for use on a circuit delivering not more than:

High SCCR						Standard SCCR		Standard Starters SIL Starters Power Inteface Modules	
Max Voltage 600 V Class J Fuse [1]		Max Voltage 480 V Circuit Breaker		Max Voltage 600 V Circuit Breaker		Max Voltage 600 V Circuit Breaker or Fuse		References	Setting range
SCCR	Maximum Amperage	SCCR	Maximum Amperage	SCCR	Maximum Amperage	SCCR	Maximum Amperage		
kA	A	kA	A	kA	A	kA	A		A
100	25	85	35	50	35	5	35	**TPRST009** **TPRSS009** **TPRPM009**	0.18-9
100	60	85	60	50	60	5	100	**TPRST025** **TPRSS025**	0.5-25
100	100	85	60	50	60	5	125	**TPRST038** **TPRSS038** **TPRPM038**	0.76-38
100	125	85	110	50	110	5	250	**TPRST065** **TPRSS065**	3.25-65
100	125	85	110	50	110	5	250	**TPRST080** **TPRSS080** **TPRPM080**	4-80

(1) When protected by any Class J or CC time-delay fuse (Class CC applicable up to 30 A only).

Group Motor Rating

Suitable for group installation on a circuit delivering not more than:

Max voltage 600 V - Class J Fuse [1]		Max voltage 480 V - Circuit Breaker		Standard Starters SIL Starters	
SCCR	Maximum Amperage	SCCR	Maximum Amperage	References	Setting range
kA	A	kA	A		A
5	90	5	90	**TPRST009** **TPRSS009**	0.18-9
5	175	5	175	**TPRST025** **TPRSS025**	0.5-25
5	175	5	175	**TPRST038** **TPRSS038**	0.76-38
5	600	5	600	**TPRST065** **TPRSS065**	3.25-65
5	600	5	600	**TPRST080** **TPRSS080**	4-80

(1) When protected by any Class J or CC time-delay fuse.

Contactor utilisation categories conforming to IEC 60947-1

The standard utilisation categories define the current values which the contactor must be able to make or break.

These values depend on:
- the type of load being switched: squirrel cage or slip ring motor, resistors,
- the conditions under which making or breaking takes place: motor stalled, starting or running, reversing, plugging.

a.c. applications

Category AC-1	This category applies to all types of a.c. load with a power factor equal to or greater than 0.95 (cos φ ≥ 0.95). Application examples: heating, distribution.
Category AC-2	This category applies to starting, plugging and inching of slip ring motors. ■ On closing, the contactor makes the starting current, which is about 2.5 times the rated current of the motor. ■ On opening, it must break the starting current, at a voltage less than or equal to the mains supply voltage.
Category AC-3	This category applies to squirrel cage motors with breaking during normal running of the motor. ■ On closing, the contactor makes the starting current, which is about 5 to 7 times the rated current of the motor. ■ On opening, it breaks the rated current drawn by the motor. Application examples: all standard squirrel cage motors: lifts, escalators, conveyor belts, bucket elevators, compressors, pumps, mixers, air conditioning units, etc... .
Category AC-4	This category covers applications with plugging and inching of squirrel cage and slip ring motors. The contactor closes at a current peak which may be as high as 5 or 7 times the rated motor current. On opening it breaks this same current at a voltage which is higher, the lower the motor speed. This voltage can be the same as the mains voltage. Breaking is severe. Application examples: printing machines, wire drawing machines, cranes and hoists, metallurgy industry.

d.c. applications

Category DC-1	This category applies to all types of d.c. load with a time constant (L/R) of less than or equal to 1 ms.
Category DC-3	This category applies to starting, counter-current braking and inching of shunt motors. Time constant ≤ 2 ms. ■ On closing, the contactor makes the starting current, which is about 2.5 times the rated motor current. ■ On opening, the contactor must be able to break 2.5 times the starting current at a voltage which is less than or equal to the mains voltage. The slower the motor speed, and therefore the lower its back e.m.f., the higher this voltage. Breaking is difficult.
Category DC-5	This category applies to starting, counter-current braking and inching of series wound motors. Time constant ≤ 7.5 ms. On closing, the contactor makes a starting current peak which may be as high as 2.5 times the rated motor current. On opening, the contactor breaks this same current at a voltage which is higher, the lower the motor speed. This voltage can be the same as the mains voltage. Breaking is severe.

Utilisation categories for auxiliary contacts & control relays conforming to IEC 60947-1

a.c. applications

Category AC-14 (1)	This category applies to the switching of electromagnetic loads whose power drawn with the electromagnet closed is less than 72 VA. Application example: switching the operating coil of contactors and relays.
Category AC-15 (1)	This category applies to the switching of electromagnetic loads whose power drawn with the electromagnet closed is more than 72 VA. Application example: switching the operating coil of contactors.

d.c. applications

Category DC-13 (2)	This category applies to the switching of electromagnetic loads for which the time taken to reach 95 % of the steady state current (T = 0.95) is equal to 6 times the power P drawn by the load (with P ≤ 50 W). Application example: switching the operating coil of contactors without economy resistor.

(1) Replaces category AC-11.
(2) Replaces category DC-11.

Definitions

Altitude

The rarefied atmosphere at high altitude reduces the dielectric strength of the air and hence the rated operational voltage of the contactor. It also reduces the cooling effect of the air and hence the rated operational current of the contactor (unless the temperature drops at the same time).

No derating is necessary up to 3000 m.

Derating factors to be applied above this altitude for main pole operational voltage and current (a.c. supply) are as follows.

Altitude	3500 m	4000 m	4500 m	5000 m
Rated operetional voltage	0.90	0.80	0.70	0.60
Rated operational current	0.92	0.90	0.88	0.86

Ambient air temperature

The temperature of the air surrounding the device, measured near to the device.
The operating characteristics are given:
- with no restriction for temperatures between -5 and +55 °C,
- with restrictions, if necessary, for temperatures between -50 and +70 °C.

Rated operational current (Ie)

This is defined taking into account the rated operational voltage, operating rate and duty, utilisation category and ambient temperature around the device.

Rated conventional thermal current (Ith) (1)

The current which a closed contactor can sustain for a minimum of 8 hours without its temperature rise exceeding the limits given in the standards.

Permissible short time rating

The current which a closed contactor can sustain for a short time after a period of no load, without dangerous overheating.

Rated operational voltage (Ue)

This is the voltage value which, in conjunction with the rated operational current, determines the use of the contactor or starter, and on which the corresponding tests and the utilisation category are based. For 3-phase circuits it is expressed as the voltage between phases.
Apart from exceptional cases such as rotor short-circuiting, the rated operational voltage Ue is less than or equal to the rated insulation voltage Ui.

Rated control circuit voltage (Uc)

The rated value of the control circuit voltage, on which the operating characteristics are based. For a.c. applications, the values are given for a near sinusoidal wave form (less than 5 % total harmonic distortion).

Rated insulation voltage (Ui)

This is the voltage value used to define the insulation characteristics of a device and referred to in dielectric tests determining leakage paths and creepage distances. As the specifications are not identical for all standards, the rated value given for each of them is not necessarily the same.

Rated impulse withstand voltage (Uimp)

The peak value of a voltage surge which the device is able to withstand without breaking down.

Rated operational power (expressed in kW)

The rated power of the standard motor which can be switched by the contactor, at the stated operational voltage.

(1) Conventional thermal current, in free air, conforming to IEC standards.
***Note:** these definitions are extracted from standard IEC 60947-1.*

Definitions

Rated breaking capacity (1)	This is the current value which the contactor can break in accordance with the breaking conditions specified in the IEC standard.
Rated making capacity (1)	This is the current value which the contactor can make in accordance with the making conditions specified in the IEC standard.
On-load factor (m)	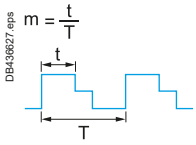 This is the ratio between the time the current flows (t) and the duration of the cycle (T). Cycle duration: duration of current flow + time at zero current.
Pole impedance	The impedance of one pole is the sum of the impedance of all the circuit components between the input terminal and the output terminal. The impedance comprises a resistive component (R) and an inductive component (X = Lω). The total impedance therefore depends on the frequency and is normally given for 50 Hz. This average value is given for the pole at its rated operational current.
Electrical durability	This is the average number of on-load operating cycles which the main pole contacts can perform without maintenance. The electrical durability depends on the utilisation category, the rated operational current and the rated operational voltage.
Mechanical durability	This is the average number of no-load operating cycles (i.e. with zero current flow through the main poles) which the contactor can perform without mechanical failure.

(1) For a.c. applications, the breaking and making capacities are expressed by the rms value of the symmetrical component of the short-circuit current. Taking into account the maximum asymmetry which may exist in the circuit, the contacts therefore have to withstand a peak asymmetrical current which may be twice the rms symmetrical component.

***Note:** these definitions are extracted from standard IEC 60947-1.*

Operational current and power conforming to IEC (θ ⩽ 60 °C)

Contactor size			LC1/ LP1 K06	LC1/ LP1 K09	LC1 K12	LC1 K16	LC1 D09	LC1 D12	LC1 D18	LC1 D25	LC1 D32	LC1 D38	LC1 D40A
Maximum operational current in AC-3	⩽ 440 V	**A**	6	9	12	16	9	12	18	25	32	38	40
Rated operational power P (standard motor power ratings)	220/240 V (1)	**kW**	1.5	2.2	3	3	2.2	3	4	5.5	7.5	9	11
	380/400 V (2)	**kW**	2.2	4	5.5	7.5	4	5.5	7.5	11	15	18.5	18.5
	415 V	**kW**	2.2	4	5.5	7.5	4	5.5	9	11	15	18.5	22
	440 V	**kW**	3	4	5.5	7.5	4	5.5	9	11	15	18.5	22
	500 V	**kW**	3	4	4	5.5	5.5	7.5	10	15	18.5	18.5	22
	660/690 V (3)	**kW**	3	4	4	4	5.5	7.5	10	15	18.5	18.5	30
	1000 V	**kW**	–	–	–	–	–	–	–	–	–	–	–

Maximum operating rate in operating cycles/hour (4)

On-load factor	Operational power						LC1 D09	LC1 D12	LC1 D18	LC1 D25	LC1 D32	LC1 D38	LC1 D40A
⩽ 85 %	P		–	–	–	–	1200	1200	1200	1200	1000	1000	1000
	0.5 P		–	–	–	–	3000	3000	2500	2500	2500	2500	2500
⩽ 25 %	P		–	–	–	–	1800	1800	1800	1800	1200	1200	1200

Operational current and power conforming to UL, CSA (θ ⩽ 60 °C)

Contactor size			LC1/ LP1 K06	LC1/ LP1 K09	LC1/ LP1 K12	LC1 D09	LC1 D12	LC1 D18	LC1 D25	LC1 D32	LC1 D38	LC1 D40A
Maximum operational current in AC-3	⩽ 440 V	**A**	6	9	12	9	12	18	25	32	–	40
Rated operational power P (standard motor power ratings 60 Hz)	200/208 V	**HP**	1.5	2	3	2	3	5	7.5	10	–	10
	230/240 V	**HP**	1.5	3	3	2	3	5	7.5	10	–	10
	460/480 V	**HP**	3	5	7.5	5	7.5	10	15	20	–	30
	575/600 V	**HP**	3	5	10	7.5	10	15	20	25	–	30

(1) 230 V for LC1G115 to LC1G800 contactors.
(2) 400 V for LC1G115 to LC1G800 contactors.
(3) 690 V for LC1G115 to LC1G800 contactors.
(4) Depending on the operational power and the on-load factor (θ ⩽ 60 °C).

LC1 D50A	LC1 D65A	LC1 D80A	LC1 D80	LC1 D95	LC1 D115	LC1 D150	LC1 G115	LC1 G150	LC1 G185	LC1 G225	LC1 G265	LC1 G330	LC1 G400	LC1 G500	LC1 G630	LC1 G800	LC1 F780	LC1 F1000
50	65	66	80	95	115	150	115	150	185	225	265	330	400	500	630	800	780	1000
15	18.5	22	22	25	30	40	30	37	55	55	75	90	110	150	180	200	220	315
22	30	37	37	45	55	75	55	75	90	110	132	160	200	250	335	450	400	560
25	37	37	45	45	59	80	55	75	90	110	132	160	200	250	335	355	425	630
30	37	37	45	45	59	80	65	80	100	129	150	185	220	295	355	375	425	670
30	37	37	55	55	75	90	65	90	110	132	160	200	250	295	375	400	450	–
33	37	37	45	45	80	100	75	90	110	160	200	220	315	355	500	560	475	–
–	–	–	45	45	65	75	–	75	75	132	160	185	220	335	450	450	450	–

LC1 D50A	LC1 D65A	LC1 D80A	LC1 D80	LC1 D95	LC1 D115	LC1 D150	LC1 G115	LC1 G150	LC1 G185	LC1 G225	LC1 G265	LC1 G330	LC1 G400	LC1 G500	LC1 G630	LC1 G800	LC1 F780	LC1 F1000
1000	1000	1000	750	750	750	750	(5)	(5)	(5)	(5)	(5)	(5)	(5)	(5)	(5)	(5)	500	(5)
2500	2500	2500	2000	2000	2000	1200	(5)	(5)	(5)	(5)	(5)	(5)	(5)	(5)	(5)	(5)	1200	(5)
1200	1200	1200	1200	1200	1200	1200	(5)	(5)	(5)	(5)	(5)	(5)	(5)	(5)	(5)	(5)	600	(5)

LC1 D50A	LC1 D65A	LC1 D80A	LC1 D80	LC1 D95	LC1 D115	LC1 D150	LC1 G115	LC1 G150	LC1 G185	LC1 G225	LC1 G265	LC1 G330	LC1 G400	LC1 G500	LC1 G630	LC1 G800	LC1 F780	LC1 F1000
50	65	65	80	95	115	150	115	150	185	225	265	330	400	500	630	800	780	1000
15	20	20	30	30	30	40	30	40	50	60	75	100	125	150	250	300	–	350
15	20	20	30	30	40	50	40	50	60	75	100	125	150	200	300	350	450	400
40	40	40	60	60	75	100	75	100	125	150	200	250	300	400	600	700	900	900
40	50	50	60	60	100	125	100	125	150	150	200	300	400	450	700	800	900	–

(5) Other values: please contact your regional sales office.

Selection according to required electrical durability, in category AC-3 (Ue ≤ 440 V)

Control of 3-phase asynchronous squirrel cage motors with breaking whilst running.
The current broken (Ic) in category AC-3 is equal to the rated operational current (Ie) of the motor.

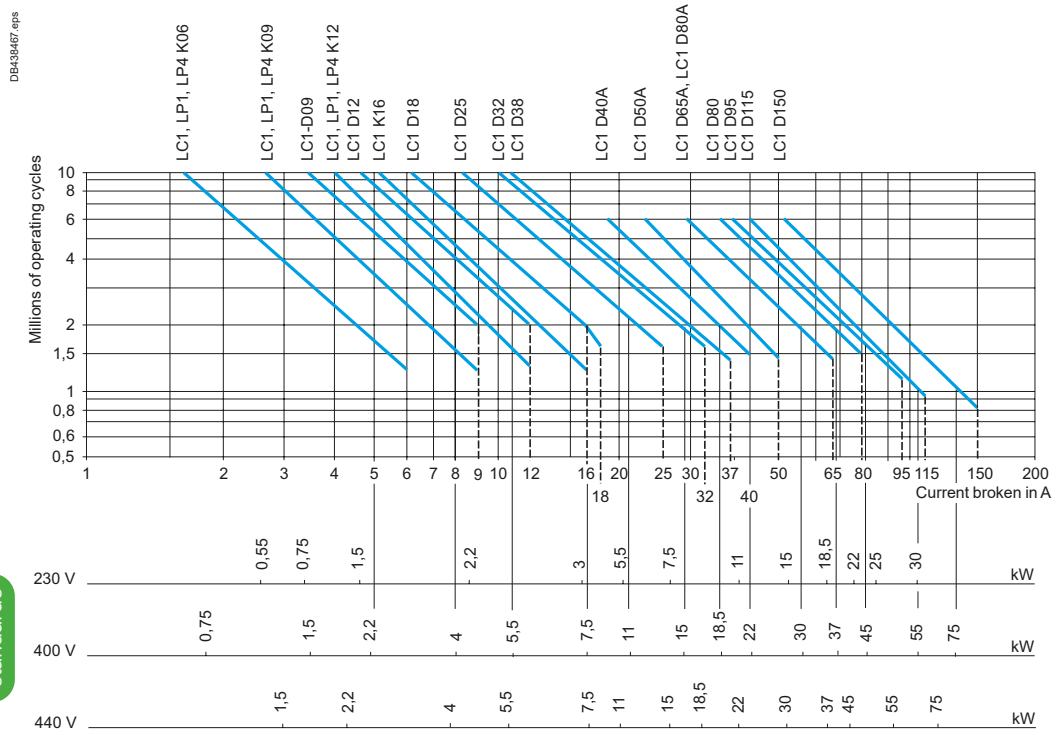

Operational power in kW-50 Hz.

Example:

Asynchronous motor with P = 5.5 kW - Ue = 400 V - Ie = 11 A - Ic = Ie = 11 A
or asynchronous motor with P = 5.5 kW - Ue = 415 V - Ie = 11 A - Ic = Ie = 11 A
3 million operating cycles required.
The above selection curves show the contactor rating needed: LC1D18.

Selection according to required electrical durability, in category AC-3 (Ue = 660/690 V) (1)

Control of 3-phase asynchronous squirrel cage motors with breaking whilst running.
The current broken (Ic) in category AC-3 is equal to the rated operational current (Ie) of the motor.

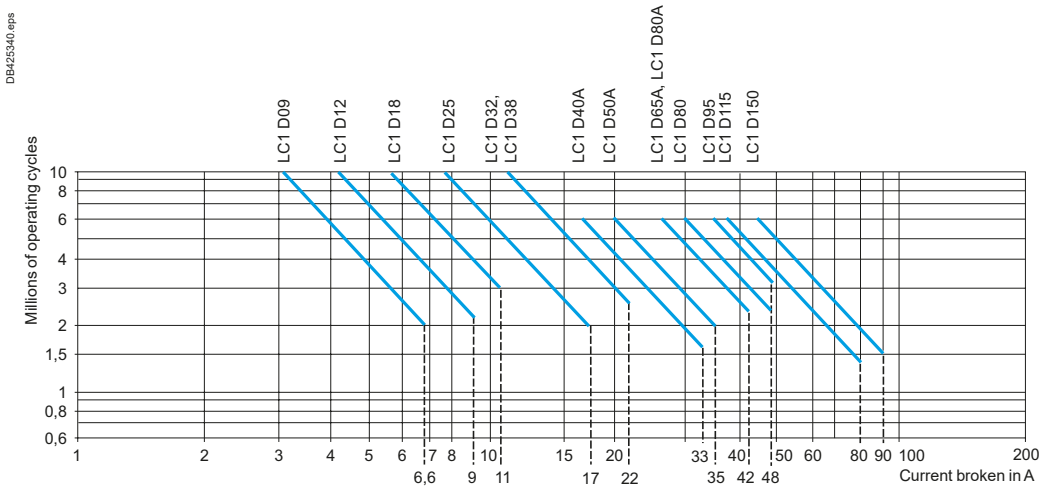

(1) For Ue = 1000 V, use the 660/690 V curves, but do not exceed the operational current at the operational power indicated for 1000 V.

Selection according to required electrical durability, in category AC-3 (Ue ≤ 440 V)

Control of 3-phase asynchronous squirrel cage motors with breaking whilst running. The current broken (Ic) in category AC-3 is equal to the rated operational current (Ie) of the motor.

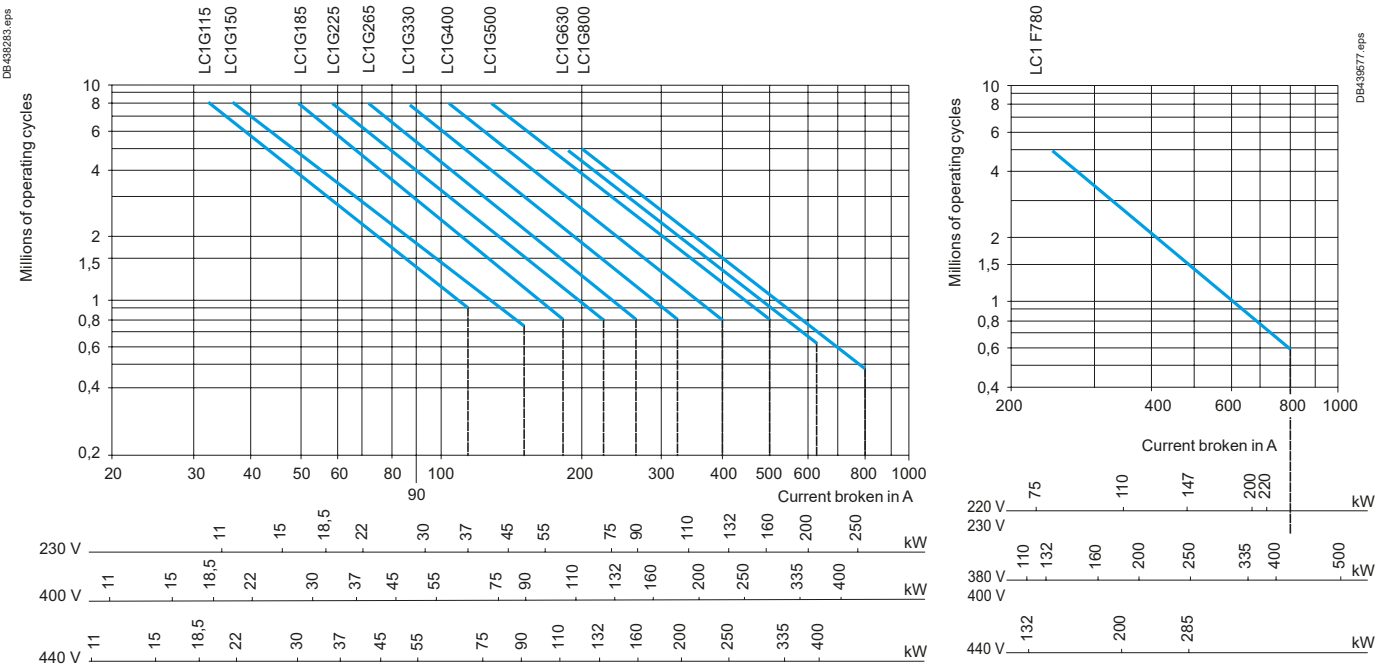

Operational power in kW-50 Hz.

Example:

Asynchronous motor with P = 132 kW - Ue = 400 V - Ie = 230 A - Ic = Ie = 230 A
1.8 million operating cycles required.
The above selection curves show the contactor rating needed: LC1G400.

Selection according to required electrical durability, in category AC-3 (Ue = 660/690 V)

Control of 3-phase asynchronous squirrel cage motors with breaking whilst running.
The current broken (Ic) in category AC-3 is equal to the rated operational current (Ie) of the motor.

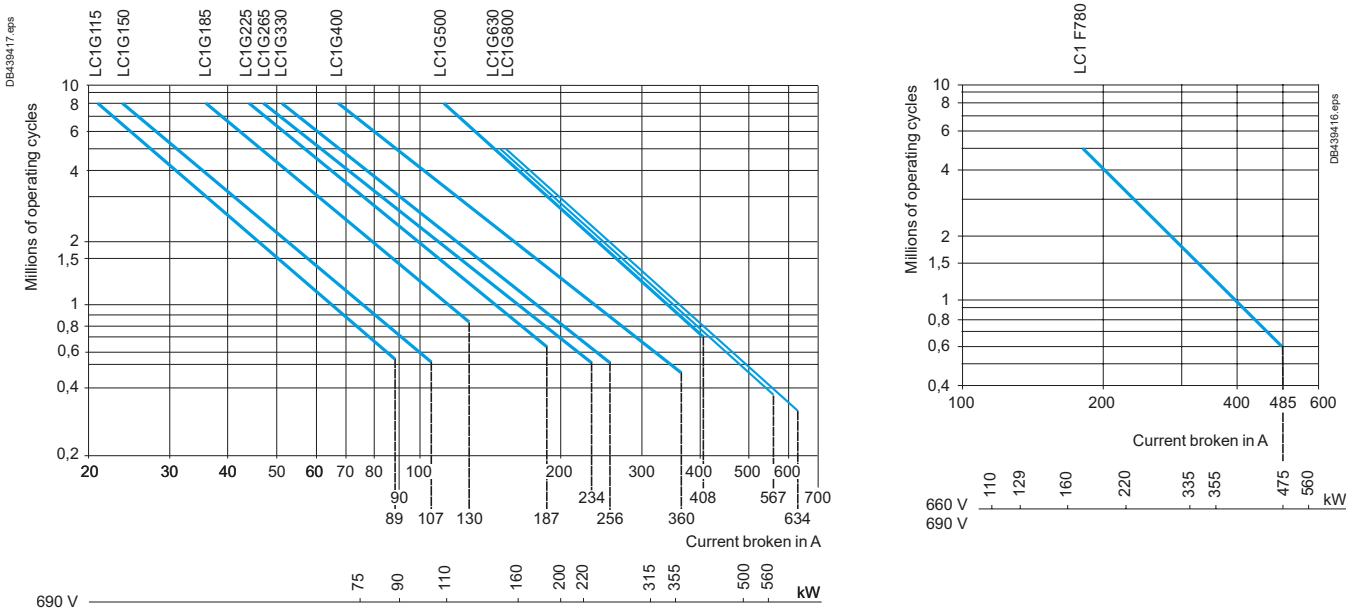

Example:

Asynchronous motor with P = 200 kW - Ue = 690 V - Ie = 203 A - Ic = Ie = 203 A
1 million operating cycles required.
The above selection curves show the contactor rating needed: LC1G400.

Maximum operational current (open-mounted device)

Contactor size			LC1/ LP1 K09	LC1/ LP1 K12	LC1 D09	LC1 DT20	LC1 D12 DT25	LC1 D18 DT32	LC1 D25 DT40	LC1 D32	LC1 D38	LC1 D40A DT60A	LC1 D50A	LC1 D65A D80A DT80A	LC1/ LP1 D80
Maximum operating rate in operating cycles/hour			600	600	600	600	600	600	600	600	600	600	600	600	600
Connection conforming to IEC 60947-1	Cable c.s.a.	mm²	4	4	4	4	4	6	6	10	10	35	35	35	50
	Bar c.s.a.	mm	–	–	–	–	–	–	–	–	–	–	–	–	–
Operational current in AC-1 in A, according to the ambient temperature conforming to IEC 60947-1	≤ 40 °C	A	20	20	25	20	25	32	40	50	50	60	80	80	125
	≤ 60 °C	A (4)	20	20	25	20	25	32	40	50	50	60	80	80	125
	≤ 70 °C	A (4)	(1)	(1)	17	(1)	17	22	28	35	35	42	56	56	80
Maximum operational power ≤ 60 °C	220/230 V	kW	8	8	9	8	9	11	14	18	18	21	29	29	45
	240 V	kW	8	8	9	8	9	12	15	19	19	23	31	31	49
	380/400 V	kW	14	14	15	14	15	20	25	31	31	37	50	50	78
	415 V	kW	14	14	17	14	17	21	27	34	34	41	54	54	85
	440 V	kW	15	15	18	15	18	23	29	36	36	43	58	58	90
	500 V	kW	17	17	20	17	20	23	33	41	41	49	65	65	102
	660/690 V	kW	22	22	27	22	27	34	43	54	54	65	80	80	135
	1000 V	kW	–	–	–	–	–	–	–	–	–	–	–	–	120

(1) Please consult your Regional Sales Office.
*(2) With set of right-angled connectors **LA9F2100.***
*(3) With set of right-angled connectors **LA9F2600**.*
*(4) **LC1F780** to **LC1F2600**, **LC1G115** to **LC1G800**: the maximum control voltage must not exceed rated Uc for a temperature θ, 60 °C ≤ θ ≤ 70 °C.*

Increase in operational current by parallel connection of poles

Apply the following coefficients to the currents or power values given above; these coefficients take into account an often unbalanced current distribution between the poles:

- 2 poles in parallel: K = 1.6
- 3 poles in parallel: K = 2.25
- 4 poles in parallel: K = 2.8

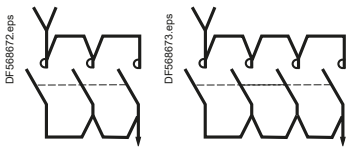

Selection according to required electrical durability, in category AC-1 (Ue ≤ 690 V)

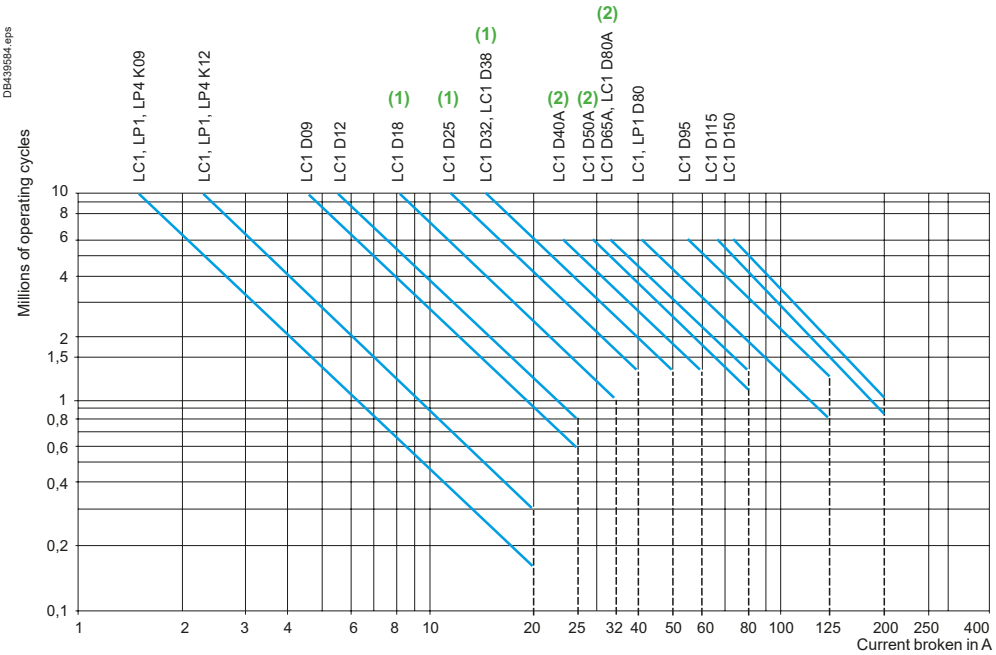

(1) For Deca Green, consult online datasheets for values.
(2) For Deca Green or DC coil, consult online datasheets for values.

Control of resistive circuits (cos ϕ ≥ 0.95).
The current broken (Ic) in category AC-1 is equal to the current (Ie) normally drawn by the load.

Example:

- Ue = 220 V - Ie = 50 A θ ≤ 40 °C - Ic = Ie = 50 A
- 2 million operating cycles required
- the above selection curves show the contactor rating needed: LC1D50A.

LC1 D95	LC1 D115	LC1 D150	LC1 G115	LC1 G150	LC1 G185	LC1 G225	LC1 G265	LC1 G330	LC1 G400	LC1 G500	LC1 G630	LC1 G800	LC1 F780	LC1 F1000	LC1S F1200	LC1 F1250	LC1 F1400	LC1 F1700	LC1 F2100	LC1 F2600
600	600	600	300	300	300	300	300	300	300	300	300	300	600	600	300	300	200	200	200	200
50	120	120	–	–	–	–	–	–	–	–	–	–	–	–	–	–	–	–	–	–
–	–	–	–	–	–	–	–	–	–	–	–	–	2 100x5	3 100x5	2 50x8	2 100x5	2 100x5	3 100x5	4 100x5	3 100x10
125	200	200	250	275	305	330	385	440	550	700	1050	1050	1600	1250	1200	1260	1400	1700	2100(2)	2600
125	200	200	225	250	275	300	350	400	500	600	800	800	1350	(1)	1110	1060	1190	1450	1750(2)	2600(3)
80	160	160	210	235	255	280	330	380	470	540	640	640	1100	(1)	1020	900	1080	1300	1500(2)	2150(3)
45	80	80	90	100	110	120	140	160	200	240	320	320	550	(1)	400	420	474	570	700	840
49	83	83	90	100	110	120	150	170	210	250	330	330	570	(1)	410	440	490	600	780	920
78	135	135	160	170	190	210	240	280	350	420	550	550	950	(1)	700	730	820	1000	1200	1450
85	140	140	160	180	200	220	250	290	360	430	580	580	1000	(1)	720	760	850	1050	1300	1580
90	150	150	170	190	210	230	270	300	380	460	610	610	1050	(1)	750	810	910	1100	1350	1680
102	170	170	190	220	240	260	300	350	430	520	690	690	1200	–	850	920	1000	1250	1550	1910
135	235	235	270	300	330	360	420	480	600	720	960	960	1650	–	1200	1260	1400	1700	2100	2520
120	345	345	390	430	480	520	610	690	870	1040	1390	1390	2400	–	–	–	2100	2500	3100(2)	3820

(1) Please consult your Regional Sales Office.
*(2) With set of right-angled connectors **LA9F2100.***
*(3) With set of right-angled connectors **LA9F2600**.*
*(4) **LC1F780** to **LC1F2600**, **LC1G115** to **LC1G800**: the maximum control voltage must not exceed rated Uc for a temperature θ, 60 °C ⩽ θ ⩽ 70 °C.*

Selection according to required electrical durability, in category AC-1 (Ue ⩽ 690 V, θ ⩽ 40 °C)

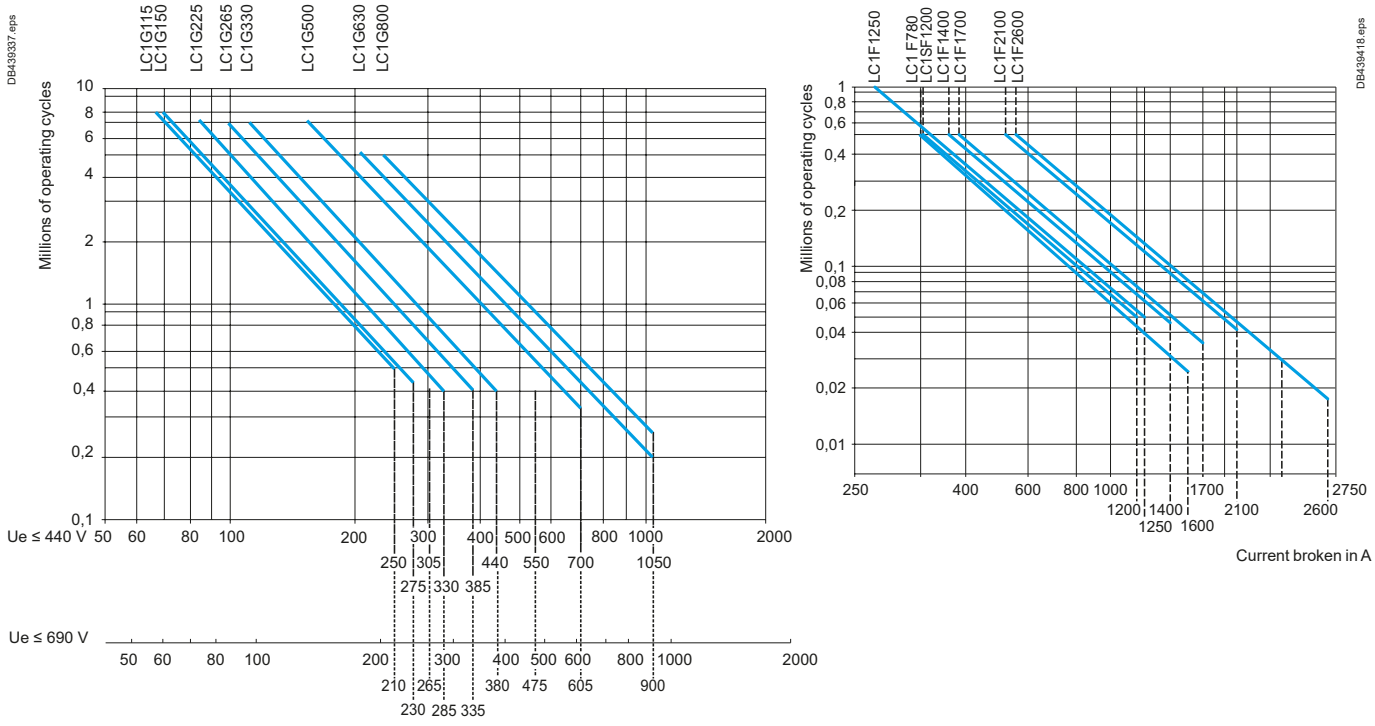

Example:

- Ue = 440 V - Ie = 500 A - θ ⩽ 40 °C - Ic = Ie = 500 A
- 0.8 million operating cycles required
- the above selection curves show the contactor rating needed: LC1G630.

Maximum breaking current

Category AC-2: slip ring motors - breaking the starting current.
Category AC-4: squirrel cage motors - breaking the starting current.

Contactor size			LC1/ LP1 K06	LC1/ LP1 K09	LC1/ LP1 K12	LC1 D09	LC1 D12	LC1 D18	LC1 D25	LC1 D32	LC1 D38	LC1 D40A
In category AC-4 (Ie max)	Ue ≤ 440 V Ie max broken = 6 x I motor	**A**	36	54	54	54	72	108	150	192	192	240
	440 V < Ue ≤ 690 V Ie max broken = 6 x I motor	**A**	26	40	40	40	50	70	90	105	105	150
Depending on the maximum operating rate (1) **and the on-load factor,** θ ≤ 60 °C (2)												
From 150 and 15 % to 300 and 10 %		**A**	20	30	30	30	40	45	75	80	80	110
From 150 and 20 % to 600 and 10 %		**A**	18	27	27	27	36	40	67	70	70	96
From 150 and 30 % to 1200 and 10 %		**A**	16	24	24	24	30	35	56	60	60	80
From 150 and 55 % to 2400 and 10 %		**A**	13	19	19	19	24	30	45	50	50	62
From 150 and 85 % to 3600 and 10 %		**A**	10	16	16	16	21	25	40	45	45	53

Contactor size			LC1 G115	LC1 G150	LC1 G185	LC1 G225	LC1 G265	LC1 G330	LC1 G400	LC1 G500	LC1 G630	LC1 G800
In category AC-4 (Ie max)	Ue ≤ 440 V Ie max broken = 6 x I motor	**A**	690	900	1110	1350	1590	1980	2400	3000	3780	4050
	440 V < Ue ≤ 690 V Ie max broken = 6 x I motor	**A**	530	640	780	1120	1400	1530	2160	2450	3400	3800
Depending on the maximum operating rate (1) **and the on-load factor,** θ ≤ 60 °C (2)												
Duty Cycle [Cycle/h]	**Load Factor [%]**											
150	15	**A**	319	400	478	562	641	758	869	1001	1124	1204
300	10	**A**	250	314	375	441	502	593	679	779	870	923
150	20	**A**	304	383	457	538	613	726	834	962	1083	1165
600	10	**A**	183	230	275	324	369	437	502	579	653	703
150	30	**A**	280	352	421	495	565	668	766	883	993	1065
1200 (3)	10	**A**	131	164	196	230	262	309	353	404	449	473
150	55	**A**	239	300	358	421	480	568	652	750	842	902
2400 (3)	10	**A**	120	151	181	212	242	287	329	379	426	457
150	85	**A**	208	261	312	368	420	498	572	661	748	809
3600 (3)	10	**A**	120	151	181	212	242	287	329	379	426	457

(1) Do not exceed the maximum number of operating cycles.
(2) For temperatures higher than 60 °C, use a maximum operating rate value equal to 80 % of the actual value when selecting from the tables.
(3) Control Module can operate with higher duty cycle during limited time followed by proposed cooling time.

Operating cycles/hour	Cool time
1200	**10 min**
2400	**30 min**
3600	**60 min**

Counter current braking (plugging)

The current varies from the maximum plug-braking current to the rated motor current.
The making current must be compatible with the rated making and breaking capacities of the contactor.

As breaking normally takes place at a current value at or near the locked rotor current, the contactor can be selected using the criteria for categories AC-2 and AC-4.

Permissible AC-4 power rating for 200 000 operating cycles

Operational voltage		LC●/ LP● K06	LC●/ LP● K09	LC● LP● K12	LC● D09	LC● D12	LC● D18	LC● D25	LC● D32	LC● D38	LC● D40A
220/230 V (4)	**kW**	0.75	1.1	1.1	1.5	1.5	2.2	3	4	4	4
380/400 V (5)	**kW**	1.5	2.2	2.2	2.2	3.7	4	5.5	7.5	7.5	9
415 V	**kW**	1.5	2.2	2.2	2.2	3	3.7	5.5	7.5	7.5	9
440 V	**kW**	1.5	2.2	2.2	2.2	3	3.7	5.5	7.5	7.5	11
500 V	**kW**	2.2	3	3	3	4	5.5	7.5	9	9	11
660/690 V (6)	**kW**	3	4	4	4	5.5	7.5	10	11	11	15

(4) 230 V for LC1G115 to LC1G800 contactors.
(5) 400 V for LC1G115 to LC1G800 contactors.
(6) 690 V for LC1G115 to LC1G800 contactors.

	LC1 D50A	LC1 D65A	LC1 D80A	LC1 D80	LC1 D95	LC1 D115	LC1 D150	LC1 F780
	300	390	390	480	570	630	830	4260
	170	210	210	250	250	540	640	2910
	140	160	160	200	200	280	310	1600
	120	148	148	170	170	250	280	1400
	100	132	132	145	145	215	240	1100
	80	110	110	120	120	150	170	820
	70	90	90	100	100	125	145	710

	LC● D50A	LC● D65A	LC1 D80A	LC● D80	LC● D95	LC1 D115	LC1 D150	LC1 G115	LC1 G150	LC1 G185	LC1 G225	LC1 G265	LC1 G330	LC1 G400	LC1 G500	LC1 G630	LC1 G800	LC1 F780
	5.5	7.5	7.5	7.5	9	9	11	11	11	15	18.5	22	22	30	37	37	37	63
	11	11	11	15	15	18.5	22	22	22	30	30	37	45	55	55	55	75	110
	11	11	11	15	15	18.5	22	22	22	30	30	37	45	55	55	55	75	110
	11	15	15	15	15	18.5	22	22	22	30	37	45	55	55	55	75	75	132
	15	15	15	22	22	30	37	11	11	18.5	22	22	30	45	45	55	55	150
	15	18.5	18.5	25	25	30	45	18.5	22	22	30	37	45	55	55	75	90	185

Selection according to required electrical durability, in categories AC-2 or AC-4 (Ue ⩽ 440 V)

Control of 3-phase asynchronous squirrel cage motors (AC-4) or slip ring motors (AC-2) with breaking whilst motor stalled.
The current broken (Ic) in AC-2 is equal to 2.5 x Ie.
The current broken (Ic) in AC-4 is equal to 6 x Ie (Ie = rated operational current of the motor).

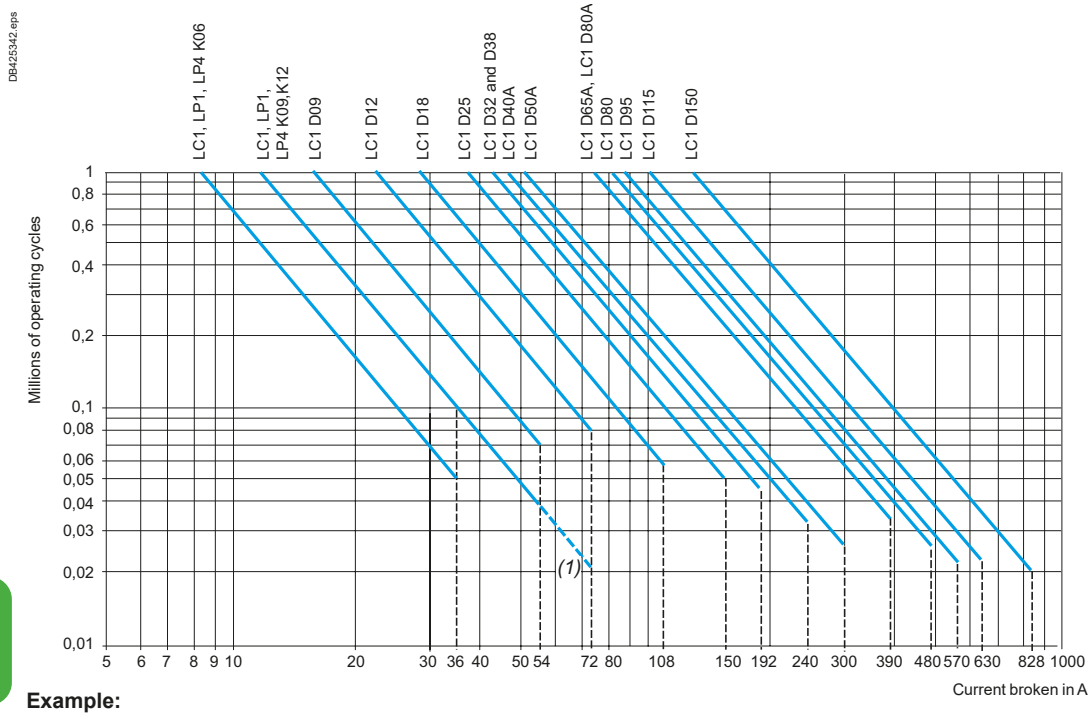

Example:

- asynchronous motor with P = 5.5 kW - Ue = 400 V - Ie = 11 A. Ic = 6 x Ie = 66 A
- or asynchronous motor with P = 5.5 kW - Ue = 415 V - Ie = 11 A. Ic = 6 x Ie = 66 A
- 200 000 operating cycles required
- the above selection curves show the contactor rating needed: LC1D25.

(1) The dotted lines are only applicable to LC1, LP1K12 contactors.

Selection according to required electrical durability, use in category AC-4 (440 V < Ue ⩽ 690 V)

Control of 3-phase asynchronous squirrel cage motors with breaking whilst motor stalled.
The current broken (Ic) in AC-2 is equal to 2.5 x Ie.
The current broken (Ic) in AC-4 is equal to 6 x Ie (Ie = rated operational current of the motor).

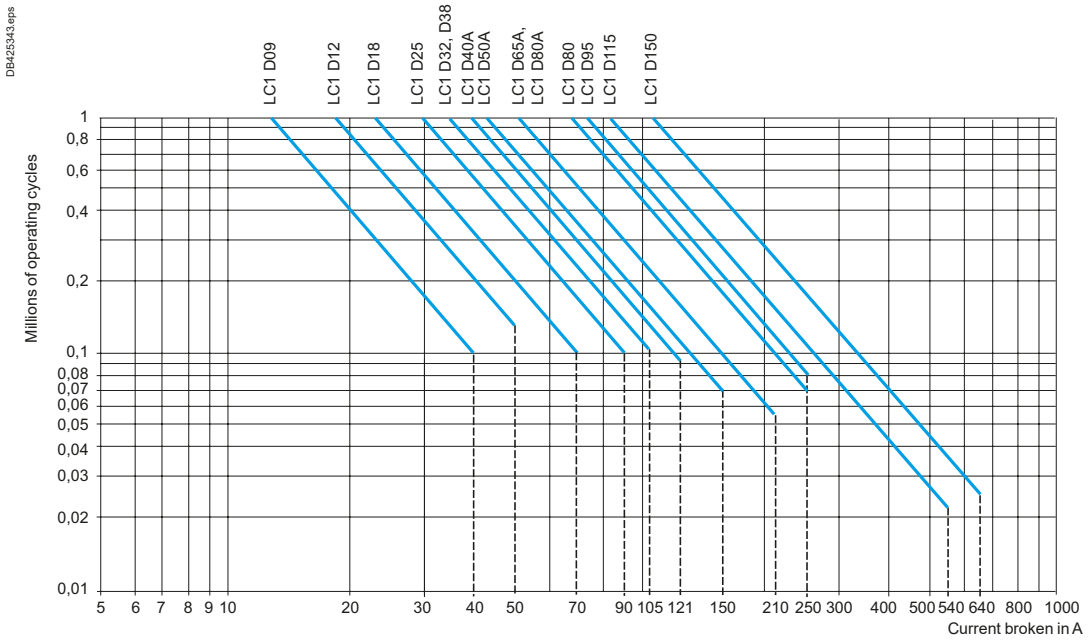

Selection according to required electrical durability, in categories AC-2 or AC-4 (Ue ≤ 440 V)

Control of 3-phase asynchronous squirrel cage motors (AC-4) or slip ring motors (AC-2) with breaking whilst motor stalled.
The current broken (Ic) in AC-4 is equal to 6 x Ie.
(Ie = rated operational current of the motor).

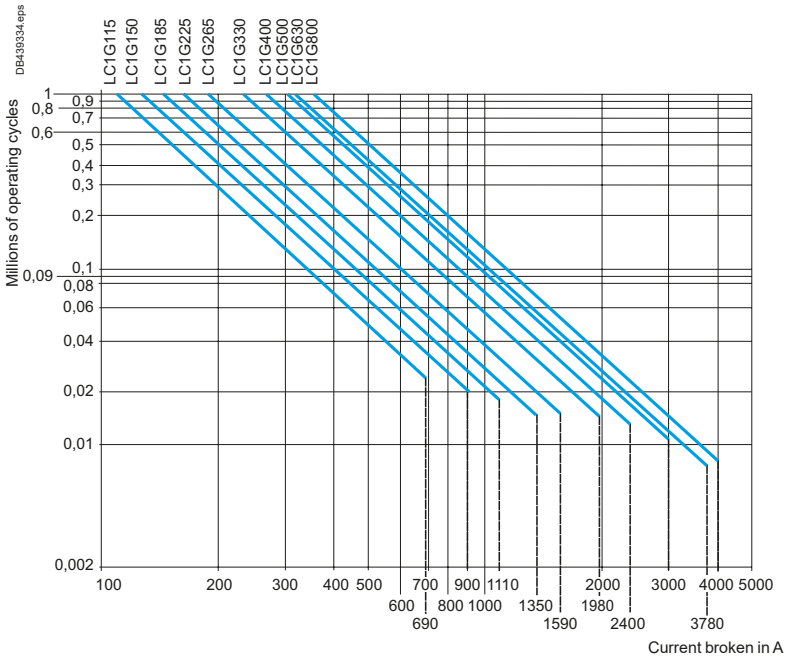

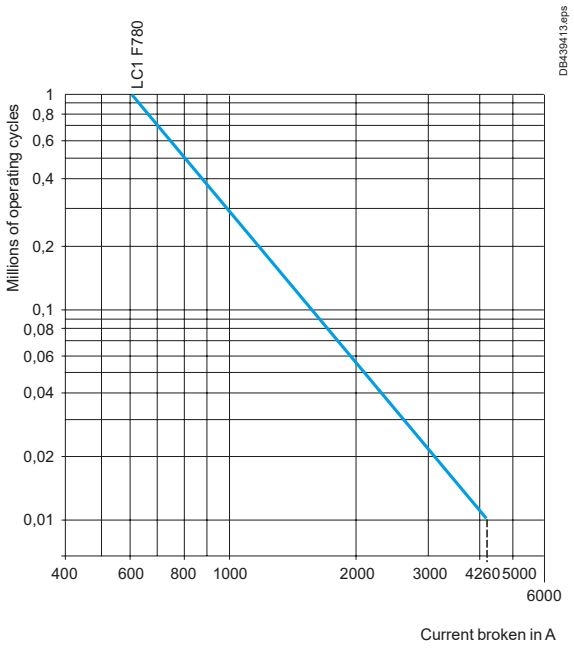

Example:

- asynchronous motor with P = 132 kW - Ue = 400 V - Ie = 230 A. Ic = 6 x Ie = 1380 A.
30 000 operating cycles required.
- the above selection curves show the contactor rating needed: LC1G330.

Selection according to required electrical durability, use in category AC-4 (440 V < Ue ≤ 690 V)

Control of 3-phase asynchronous squirrel cage motors with breaking whilst motor stalled.
The current broken (Ic) in AC-4 is equal to 6 x Ie (Ie = rated operational current of the motor).

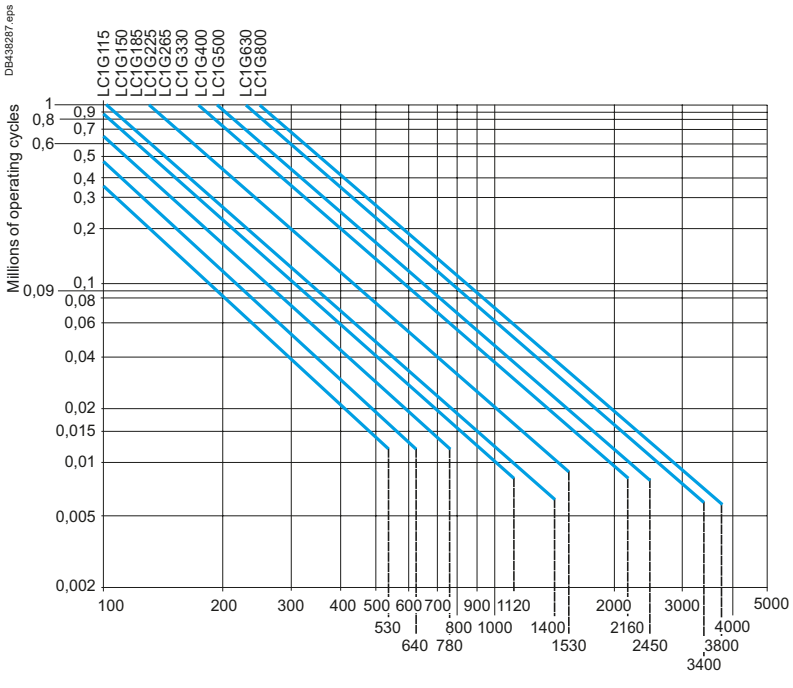

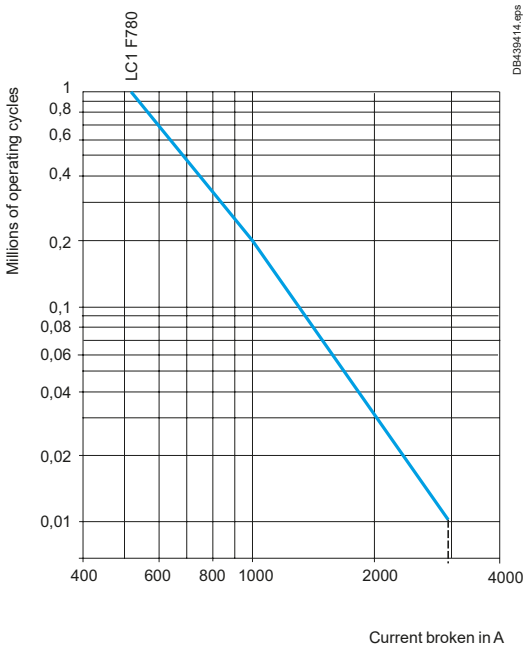

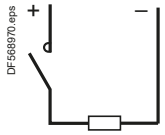

1 pole

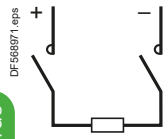

2 poles

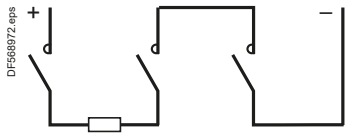

3 poles

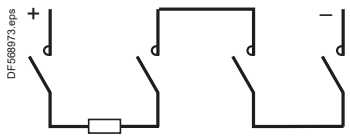

4 poles

Coordination and standards

Rated operational current (Ie) in Amperes, in utilisation category DC-1, resistive loads: time constant $\frac{L}{R}$ ≤ 1 ms, ambient temperature ≤ 60 °C

Rated operational voltage Ue	No. of poles connected in series	Contactor rating								
		LC1 D09	LC1 DT20	LC1 D12 DT25	LC1 D18 DT32	LC1 D25 DT40	LC1 D32	LC1 D38	LC1 D40A	LC1 DT60A
V										
24	1	20	20	20	25	32	40	40	50	50
	2	20	20	20	25	32	40	40	50	50
	3	20	20	20	25	32	40	40	50	50
	4	–	20	20	25	32	–	–	–	50
48/75	1	20	20	20	25	32	40	40	50	50
	2	20	20	20	25	32	40	40	50	50
	3	20	20	20	25	32	40	40	50	50
	4	–	20	20	25	32	–	–	–	50
125	1	4	4	4	4	7	7	7	7	7
	2	20	20	20	25	32	40	40	50	50
	3	20	20	20	25	32	40	40	50	50
	4	–	20	20	25	32	–	–	–	50
250	1	1	1	1	1	1	1	1	1	1
	2	4	4	4	4	7	7	7	7	7
	3	20	20	20	25	32	40	40	50	50
	4	–	20	20	25	32	–	–	–	50
300	1	–	–	–	–	–	–	–	–	–
	2	–	–	–	–	–	–	–	–	–
	3	4	4	4	4	7	7	7	7	–
	4	–	20	20	25	32	–	–	–	50
460	1	–	–	–	–	–	–	–	–	–
	2	–	–	–	–	–	–	–	–	–
	3	–	–	–	–	–	–	–	–	–
	4	–	–	–	–	–	–	–	–	–

Rated operational current (Ie) in Amperes, in utilisation category DC-2 to DC-5, inductive loads: time constant $\frac{L}{R}$ ≤ 15 ms, ambient temperature ≤ 60 °C

Rated operational voltage Ue	No. of poles connected in series	Contactor rating								
		LC1 D09	LC1 DT20	LC1 D12 DT25	LC1 D18 DT32	LC1 D25 DT40	LC1 D32	LC1 D38	LC1 D40A	LC1 DT60A
V										
24	1	20	20	20	25	32	40	40	50	50
	2	20	20	20	25	32	40	40	50	50
	3	20	20	20	25	32	40	40	50	50
	4	–	20	20	25	32	–	–	–	50
48/75	1	20	20	20	25	32	40	40	50	50
	2	20	20	20	25	32	40	40	50	50
	3	20	20	20	25	32	40	40	50	50
	4	–	20	20	25	32	–	–	–	50
125	1	2	2	2	2	3	3	3	4	4
	2	20	20	20	25	32	40	40	50	50
	3	20	20	20	25	32	40	40	50	50
	4	–	20	20	25	32	–	–	–	50
250	1	0.5	0.5	0.5	0.5	0.5	0.5	0.5	1	1
	2	2	2	2	2	3	3	3	4	4
	3	8	8	8	8	32	40	40	50	50
	4	–	20	20	25	32	–	–	–	50
300	1									
	2									
	3	2	2	2	2	3	3	3	3	3
	4	–	8	8	8	32	–	–	–	50
460	1	–	–	–	–	–	–	–	–	–
	2									
	3									
	4	–	–	–	–	–	–	–	–	–

Contactor rating																	
LC1 D50A	**LC1 D65A D80A**	**LC1 DT80A**	**LC1 D80**	**LC1 D95**	**LC1 D115**	**LC1 D150**	**LC1 G115**	**LC1 G150**	**LC1 G185**	**LC1 G225**	**LC1 G265**	**LC1 G330**	**LC1 G400**	**LC1 G500**	**LC1 G630**	**LC1 G800**	**LC1 F780**
65	65	65	100	100	200	200	225	250	275	300	350	400	500	600	950	950	1300
65	65	65	100	100	200	200	225	250	275	300	350	400	500	600	950	950	1300
65	65	65	100	100	200	200	225	250	275	300	350	400	500	600	950	950	1300
–	–	65	100	–	200	–	225	250	275	300	350	400	500	600	950	950	1300
65	65	65	100	100	200	200	225	250	275	300	350	400	500	600	950	950	1300
65	65	65	100	100	200	200	225	250	275	300	350	400	500	600	950	950	1300
65	65	65	100	100	200	200	225	250	275	300	350	400	500	600	950	950	1300
–	–	65	100	–	200	–	225	250	275	300	350	400	500	600	950	950	1300
7	7	7	12	12	12	12	205	225	250	270	315	360	450	540	855	855	1180
65	65	65	100	100	200	200	205	225	250	270	315	360	450	540	855	855	1180
65	65	65	100	100	200	200	225	250	275	300	355	405	505	605	960	960	1300
–	–	65	100	–	200	–	225	250	275	300	355	405	505	605	960	960	1300
1	1.5	1.5	2	2	10	10	–	–	–	–	–	–	–	–	–	–	–
7	7	7	12	12	200	200	180	205	225	245	285	325	405	485	770	770	1000
65	65	65	100	100	200	200	225	250	275	300	350	400	500	600	950	950	1300
–	–	65	100	–	200	–	225	250	275	300	350	400	500	600	945	945	1300
–	–	–	–	–	–	–	–	–	–	–	–	–	–	–	–	–	
–	–	–	–	–	–	–	–	–	–	–	–	–	–	–	–	–	
7	7	7	12	12	200	200	185	205	225	250	290	330	415	495	785	785	1000
–	–	65	100	–	200	–	225	250	275	300	350	400	500	600	950	950	1000
–	–	–	–	–	–	–	–	–	–	–	–	–	–	–	–	–	–
–	–	–	–	–	–	–	–	–	–	–	–	–	–	–	–	–	–
–	–	–	–	–	–	–	–	–	–	–	–	–	–	–	–	–	–
–	–	–	–	–	200	–	185	205	225	245	285	325	410	490	775	775	1000

Contactor rating																	
LC1 D50A	**LC1 D65A D80A**	**LC1 DT80A**	**LC1 D80**	**LC1 D95**	**LC1 D115**	**LC1 D150**	**LC1 G115**	**LC1 G150**	**LC1 G185**	**LC1 G225**	**LC1 G265**	**LC1 G330**	**LC1 G400**	**LC1 G500**	**LC1 G630**	**LC1 G800**	**LC1 F780**
65	65	65	100	100	200	200	225	250	275	300	350	400	500	600	950	950	1300
65	65	65	100	100	200	200	225	250	275	300	350	400	500	600	950	950	1300
65	65	65	100	100	200	200	225	250	275	300	350	400	500	600	950	950	1300
–	–	65	100	–	200	–	225	250	275	300	350	400	500	600	950	950	1300
65	65	65	100	100	200	200	225	250	275	300	350	400	500	600	950	950	1300
65	65	65	100	100	200	200	225	250	275	300	350	400	500	600	950	950	1300
65	65	65	100	100	200	200	225	250	275	300	350	400	500	600	950	950	1300
–	–	65	100	–	200	–	225	250	275	300	350	400	500	600	950	950	1300
4	4	4	5	5	10	10	-	-	-	-	-	-	-	-	-	-	–
65	65	65	100	100	200	200	190	210	230	250	290	335	420	500	795	795	1000
65	65	65	100	100	200	200	205	230	255	275	325	370	460	555	875	875	1000
–	–	65	100	–	200	–	205	230	255	275	325	370	460	555	875	875	1000
1	1.5	1.5	1	1	3	3	–	–	–	–	–	–	–	–	–	–	–
4	4	4	5	5	200	200	175	190	210	230	270	305	385	460	730	730	900
65	65	65	100	100	200	200	185	210	230	250	290	335	415	500	790	790	1000
–	–	65	100	–	200	–	225	250	275	300	355	405	505	605	960	960	1000
–	–	–	–	–	–	–	–	–	–	–	–	–	–	–	–	–	–
–	–	–	–	–	–	–	–	–	–	–	–	–	–	–	–	–	–
3	3	3	5	5	200	200	175	195	210	230	270	310	385	465	730	730	900
–	–	65	100	–	200	–	225	250	275	300	350	400	500	600	950	950	1000
–	–	–	–	–	–	–	–	–	–	–	–	–	–	–	–	–	–
–	–	–	–	–	–	–	–	–	–	–	–	–	–	–	–	–	–
–	–	–	–	–	–	–	–	–	–	–	–	–	–	–	–	–	–
–	–	–	–	–	200	–	175	190	210	230	270	310	385	460	730	730	800

Selection according to required electrical durability, use in categories DC-1 to DC-5

The criteria for contactor selection are:
- the rated operational current Ie
- the rated operational voltage Ue
- the utilisation category and the time constant L/R
- the required electrical durability.

Maximum operating rate (operating cycles)

The following limits must not be exceeded: 120 operating cycles/hour at rated operational current Ie.

Electrical durability

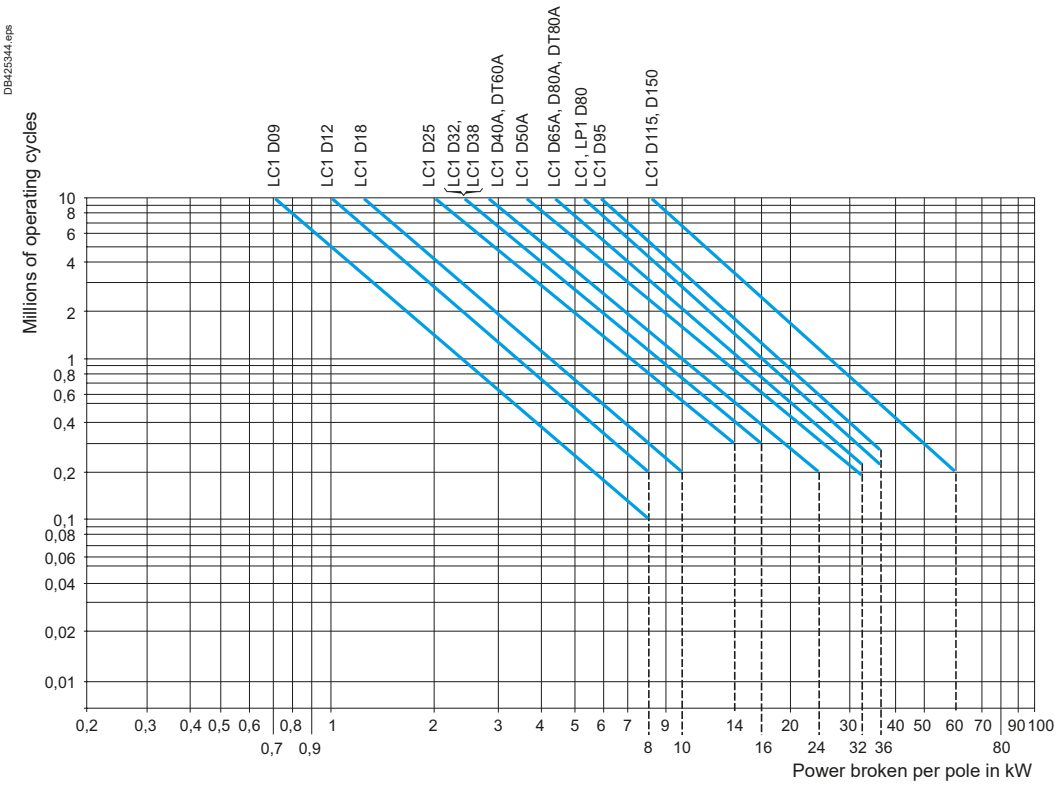

Example
Series wound motor - P = 1.5 kW - Ue = 200 V - Ie = 7.5 A.
Utilisation: reversing, inching.
- Utilisation category = DC-5.
- Select contactor LC1D09 with 3 poles in series.
- The power broken is: Pc total = 2.5 x 200 x 7.5 = 3.75 kW.
- The power broken per pole is: 1.25 kW.
- The electrical durability read from the curve is ⩾ 3 millions of operating cycles.

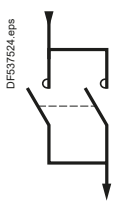

Use of poles in parallel

Electrical durability can be increased by using poles connected in parallel.

With N poles connected in parallel, the electrical durability becomes: electrical durability read from the curves x N x 0.7.

Note:
When the poles are connected in parallel, the maximum operational currents indicated on pages A5/64 and A5/65 must not be exceeded.

Note:
Ensure that the connections are made in such a way as to equalise the currents in each pole.

Selection according to required electrical durability, use in categories DC-1 to DC-5

Determining the electrical durability

The electrical durability can be read directly from the curves below, having previously calculated the power broken as follows:
P broken = U broken x I broken.
The tables below give the values of Uc and Ic for the various utilisation categories.

Power broken			
Utilisation categories	**U broken**	**I broken**	**P broken**
DC-1 Non inductive or slightly inductive loads	Ue	Ie	Ue x Ie
DC-2 Shunt wound motors, breaking whilst motor running	0.1 Ue	Ie	0.1 Ue x Ie
DC-3 Shunt wound motors, reversing, inching	Ue	2.5 Ie	Ue x 2.5 Ie
DC-4 Series wound motors, breaking whilst motor running	0.3 Ue	Ie	0.3 Ue x Ie
DC-5 Series wound motors, reversing, inching	Ue	2.5 Ie	Ue x 2.5 Ie

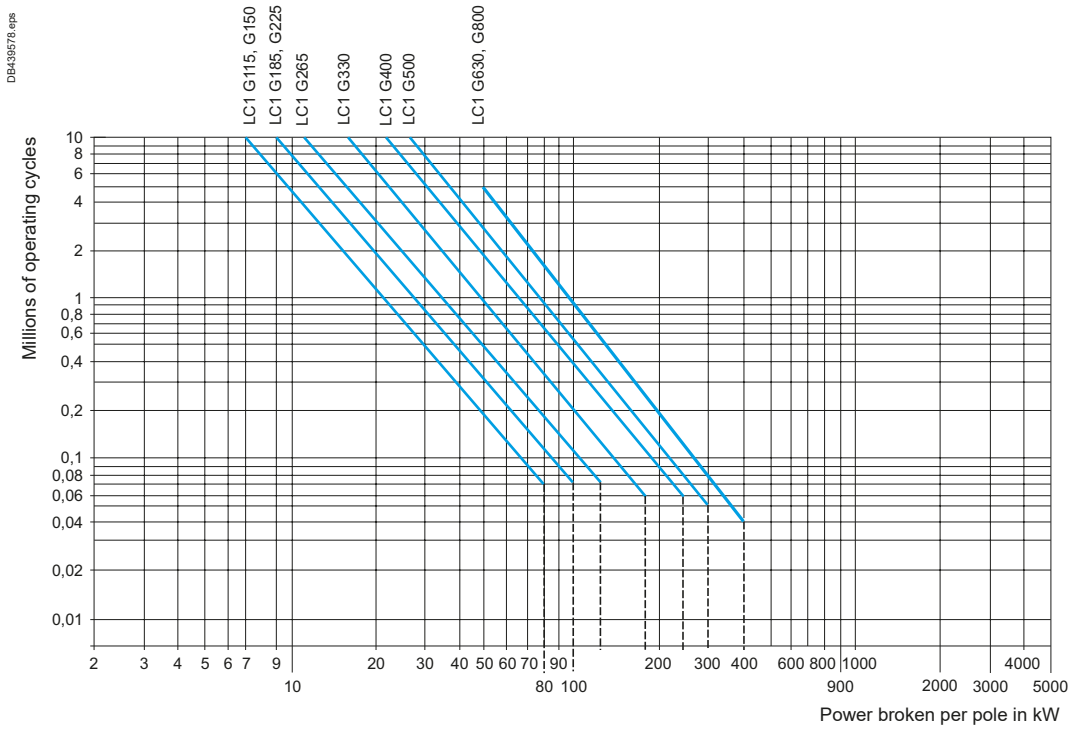

Example
Series wound motor: P = 40 kW - Ue = 200 V - Ie = 200 A.
Utilisation: reversing, inching.

- Utilisation category = DC-5.
- Select contactor LC1G150 with 2 poles in series.
- The power broken is: Pc total = 2.5 x 200 x 200 = 100 kW.
- The power broken per pole is 50 kW.
- The electrical durability read from the curve is 500000 operating cycles.



General

The operating conditions of lighting circuits have the following characteristics:
- continuous duty: the switching device can remain closed for several days or even months
- a dispersion factor of 1: all luminaires in the same group are switched on or off simultaneously
- a relatively high temperature around the device due to the enclosure, the presence of fuses, or an unventilated control panel location.

This is why the operational current for lighting is lower than the value given for AC-1 duty.

Protection

The continuous duty current drawn by a lighting circuit is constant. In fact:
- it is unlikely that the number of luminaires of an existing circuit will be modified
- this type of circuit cannot create an overload of long duration.

It is therefore only necessary to provide short-circuit protection.
This can be provided by:
- gG type fuses, or
- modular circuit breakers.

Nevertheless, it is always possible and sometimes more economical (smaller cable size) to protect the circuit by a thermal overload relay and associated aM type uses.

Distribution system

Single-phase circuit, 220/240 V

The tables on pages A5/69 to A5/73 are based on a single-phase 220/240 V circuit and can therefore be applied directly in this case.

3-phase circuit, 380/415 V (with neutral)

The total number of lamps (N) to be switched simultaneously is divided into three equal groups, each connected between one phase and neutral. The contactor can then be selected from the 220/240 V single-phase tables for a number of lamps equal to $\frac{N}{3}$ lamps.

3-phase circuit, 220/240 V

The total number of lamps (N) to be switched simultaneously is divided into three equal groups, each connected between 2 phases (L1-L2), (L2-L3), (L3-L1).
The contactor can then be selected from the 220/240 V single-phase table for a number of lamps equal to $\frac{N}{\sqrt{3}}$ lamps.

Contactor selection tables

For the different types of lamps, the tables on pages A5/69 to A5/73 give the maximum number of lamps of unit power P (in Watts), which can be switched simultaneously for each size of contactor.
They are based on:
- a 220/240 V single-phase circuit
- an ambient temperature of 55 °C (2), taking into account the operating conditions (see General paragraph)
- an electrical life of more than 10 years (200 days' operation per year).

They take into account:
- the total current drawn (including ballast)
- transient phenomena which occur at switch-on
- the starting currents and their duration
- the circulation of any harmonics which may be present.

Lamps with compensating capacitor C (µF) connected in parallel

Parallel connected compensating capacitors **C** cause a current peak at the moment of switch-on. To ensure that the value of this current peak remains compatible with the making characteristics of the contactors, the unit value of the capacitance must not exceed the following:

Switching contactor rating (1)	**LC1 K09**	**LP1 K09**	**LC1 D09**	**LC1 D12**	**LC1 D18**	**LC1 D25**	**LC1 D32**	**LC1 D38**	**LC1 D40A**	**LC1 D50A**	**LC1 D65A**	**LC1 D80A**	**LC1 D80**
Maximum unit value C (µF) of parallel connected compensating capacitor	7	3	18	18	25	60	96	96	120	120	240	240	240
Switching contactor rating (1)	**LC1 D80**	**LC1 D95**	**LC1 D115**	**LC1 D150**	**LC1 G185**	**LC1 G225**	**LC1 G265**	**LC1 G330**	**LC1 G400**	**LC1 G500**	**LC1 G630**	**LC1 G800**	
Maximum unit value C (µF) of parallel connected compensating capacitor	240	240	300	360	800	1200	1700	2500	4000	6000	9000	10800	

This value is independent of the number of lamps switched by the contactor.
(1) Validation tests have not been carried out with Deca Green contactors.
(2) For an ambient temperature of 40 °C, multiply the number by 1.2.



Usual values

The tables show the following values:
- IB: value of current drawn by each lamp at its rated voltage,
- C: unit capacitance for each lamp,

corresponding to the values normally quoted by lamp manufacturers.

These values are given for an ambient temperature of 55 °C (for 40 °C, multiply the number by 1.2).

Incandescent and halogen lamps

P (W)	60	75	100	150	200	300	500	750	1000	
IB (A)	**0.27**	**0.34**	**0.45**	**0.68**	**0.91**	**1.40**	**2.30**	**3.40**	**4.60**	**LC1 (1)**
Max. no. of lamps according to P (W)	35	28	21	14	10	6	4	2	2	**K09**
	59	47	35	23	17	11	7	4	3	**D09, D12**
	77	61	46	30	23	15	9	6	4	**D18**
	92	73	55	36	27	18	11	7	5	**D25**
	129	103	77	51	38	25	15	10	7	**D32, D38**
	163	129	97	64	48	31	19	13	9	**D40A**
	207	164	124	82	62	40	24	16	12	**D50A, D65A, D80A**
	296	235	177	117	88	57	34	23	17	**D80, D95**
	430	340	256	170	126	82	50	34	24	**D115**
	466	370	280	184	138	90	54	36	26	**D150**
	710	564	426	282	210	136	82	56	40	**G185**
	770	610	462	304	228	148	90	60	44	**G225**
	888	704	532	352	262	170	104	70	52	**G265**
	1006	800	604	400	298	194	118	80	58	**G330**
	1274	1010	764	504	378	244	148	100	74	**G400**
	1718	1364	1030	682	508	330	200	136	100	**G500**
	2328	1850	1396	924	690	448	272	184	136	**G630**
	2776	2204	1666	1102	824	534	326	220	162	**G800**

Mixed lighting lamps

P (W)	100	160	250	500	1000	
IB (A)	**0.45**	**0.72**	**1.10**	**2.30**	**4.50**	**LC1 (1)**
Max. no. of lamps according to P (W)	21	13	8	4	2	**K09**
	35	22	14	7	3	**D09, D12**
	46	29	18	9	4	**D18**
	55	36	23	11	5	**D25**
	77	48	30	15	7	**D32, D38**
	97	61	38	19	9	**D40A**
	124	77	49	24	12	**D50A, D65A, D80A**
	177	111	70	34	17	**D80, D95**
	256	160	104	50	26	**D115**
	280	174	114	54	28	**D150**
	426	266	174	82	42	**G185**
	462	288	188	90	46	**G225**
	532	332	218	104	52	**G265**
	604	378	246	118	60	**G330**
	764	478	312	150	76	**G400**
	1030	644	422	202	102	**G500**
	1398	874	572	272	140	**G630**
	1666	1040	680	326	166	**G800**

(1) Validation tests have not been carried out with Deca Green contactors.



Usual values

The tables show the following values:
- IB: value of current drawn by each lamp at its rated voltage
- C: unit capacitance for each lamp

corresponding to the values normally quoted by lamp manufacturers.

These values are given for an ambient temperature of 55 °C (for 40 °C, multiply the number by 1.2).

Fluorescent lamps with starter. Single fitting

	Non corrected				With parallel correction						
P (W)	**20**	**40**	**65**	**80**	**110**	**20**	**40**	**65**	**80**	**110**	
IB (A)	**0.39**	**0.45**	**0.70**	**0.80**	**1.2**	**0.17**	**0.26**	**0.42**	**0.52**	**0.72**	
C (µF)	**–**	**–**	**–**	**–**	**–**	**5**	**5**	**7**	**7**	**16**	**LC1 (1)**
Max. no. of lamps according to P (W)	24	21	13	12	8	56	36	22	18	–	**K09**
	41	35	22	20	13	94	61	38	30	22	**D09, D12**
	53	46	30	26	17	123	80	50	40	29	**D18**
	66	57	37	32	21	152	100	61	50	36	**D25**
	89	77	50	43	29	205	134	83	67	48	**D32, D38**
	112	97	62	55	36	258	169	104	84	61	**D40A**
	143	124	80	70	46	329	215	133	107	77	**D50A, D65A, D80A**
	205	177	114	100	66	470	367	190	153	111	**D80, D95**
	410	354	228	200	132	940	614	380	306	222	**D115, D150**
	492	426	274	240	160	1128	738	456	368	266	**G185**
	532	462	296	260	172	1224	800	490	400	288	**G225**
	614	532	342	300	200	1412	922	570	462	332	**G265**
	696	604	388	340	226	1600	1046	648	522	378	**G330**
	882	764	490	430	286	2024	1322	818	662	478	**G400**
	1190	1030	662	580	386	2728	1724	1104	892	644	**G500**
	1612	1398	698	786	524	3700	2418	1498	1210	874	**G630, G800**

Fluorescent lamps with starter. Twin fitting

	Non corrected					With series correction					
P (W)	**2x20**	**2x40**	**2x65**	**2x80**	**2x110**	**2x20**	**2x40**	**2x65**	**2x80**	**2x110**	
IB (A)	**2x0.22**	**2x0.41**	**2x0.67**	**2x0.82**	**2x1.1**	**2x0.13**	**2x0.24**	**2x0.39**	**2x0.48**	**2x0.65**	**LC1 (1)**
Max. no. of lamps according to P (W)	2x21	2x11	2x7	2x5	2x4	2x36	2x20	2x12	2x10	2x7	**K09**
	2x36	2x18	2x10	2x8	2x6	2x60	2x32	2x20	2x16	2x12	**D09, D12**
	2x46	2x24	2x14	2x12	2x8	2x80	2x42	2x26	2x20	2x16	**D18**
	2x58	2x30	2x18	2x14	2x10	2x100	2x54	2x32	2x26	2x20	**D25**
	2x78	2x42	2x26	2x20	2x14	2x134	2x72	2x44	2x36	2x26	**D32, D38**
	2x100	2x52	2x32	2x26	2x18	2x168	2x90	2x56	2x44	2x32	**D40A**
	2x126	2x68	2x40	2x34	2x24	2x214	2x116	2x70	2x58	2x42	**D50A, D65A, D80A**
	2x180	2x96	2x58	2x48	2x36	2x306	2x166	2x102	2x82	2x60	**D80, D95**
	2x360	2x194	2x118	2x96	2x72	2x614	2x332	2x204	2x166	2x122	**D115, D150**
	2x436	2x234	2x142	2x116	2x86	2x738	2x400	2x246	2x200	2x148	**G185**
	2x472	2x254	2x154	2x126	2x94	2x800	2x432	2x266	2x216	2x160	**G225**
	2x544	2x292	2x178	2x146	2x108	2x922	2x500	2x308	2x250	2x184	**G265**
	2x618	2x332	2x202	2x166	2x124	2x1046	2x566	2x348	2x282	2x208	**G330**
	2x782	2x420	2x256	2x210	2x156	2x1322	2x716	2x440	2x358	2x264	**G400**
	2x1054	2x566	2x346	2x282	2x210	2x1784	2x966	2x594	2x482	2x356	**G500**
	2x1430	2x766	2x468	2x384	2x286	2x2418	2x1310	2x806	2x654	2x484	**G630, G800**

(1) Validation tests have not been carried out with Deca Green contactors.



Usual values

The tables show the following values:
- IB: value of current drawn by each lamp at its rated voltage
- C: unit capacitance for each lamp

corresponding to the values normally quoted by lamp manufacturers.

These values are given for an ambient temperature of 55 °C (for 40 °C, multiply the number by 1.2).

Fluorescent lamps without starter. Single fitting

	Non corrected					With parallel correction					
P (W)	**20**	**40**	**65**	**80**	**110**	**20**	**40**	**65**	**80**	**110**	
IB (A)	**0.43**	**0.55**	**0.80**	**0.95**	**1.4**	**0.19**	**0.29**	**0.46**	**0.57**	**0.79**	
C (µF)	**–**	**–**	**–**	**–**	**–**	**5**	**5**	**7**	**7**	**16**	**LC1 (1)**
Max. no. of lamps according to P (W)	22	17	12	10	6	50	33	20	16	–	**K09**
	37	29	20	16	11	84	55	34	28	20	**D09, D12**
	48	38	26	22	15	110	72	45	36	26	**D18**
	60	47	32	27	18	136	89	56	45	32	**D25**
	97	63	43	36	25	184	101	76	61	44	**D32, D38**
	102	80	55	46	31	231	151	95	77	55	**D40A**
	130	101	70	58	40	294	193	121	98	70	**D50A, D65A, D80A**
	186	145	100	84	57	421	275	173	140	101	**D80, D95**
	372	290	200	168	114	842	550	346	280	202	**D115, D150**
	446	348	240	202	136	1010	662	416	336	242	**G185**
	484	378	260	218	148	1094	716	452	364	262	**G225**
	558	436	300	252	170	1262	828	522	420	304	**G265**
	632	494	340	286	194	1432	938	590	476	344	**G330**
	800	624	430	362	246	1810	1186	748	604	434	**G400**
	1078	844	580	488	330	2442	1600	1008	814	586	**G500**
	1462	1144	786	662	448	3310	2168	1366	1104	796	**G630, G800**

Fluorescent lamps without starter. Twin fitting

	Non corrected					With series correction					
P (W)	**2x20**	**2x40**	**2x65**	**2x80**	**2x110**	**2x20**	**2x40**	**2x65**	**2x80**	**2x110**	
IB (A)	**2x0.25**	**2x0.47**	**2x0.76**	**2x0.93**	**2x1.3**	**2x0.14**	**2x0.26**	**2x0.43**	**2x0.53**	**2x0.72**	**LC1 (1)**
Max. no. of lamps according to P (W)	2x19	2x10	2x6	2x5	2x3	2x34	2x18	2x11	2x9	2x6	**K09**
	2x32	2x16	2x10	2x8	2x6	2x56	2x30	2x18	2x14	2x10	**D09, D12**
	2x42	2x22	2x12	2x10	2x8	2x74	2x40	2x24	2x18	2x14	**D18**
	2x52	2x26	2x16	2x12	2x10	2x92	2x50	2x30	2x24	2x18	**D25**
	2x70	2x36	2x22	2x18	2x12	2x124	2x66	2x40	2x32	2x24	**D32, D38**
	2x88	2x46	2x28	2x22	2x16	2x156	2x84	2x50	2x40	2x30	**D40A**
	2x112	2x58	2x36	2x30	2x20	2x200	2x106	2x64	2x52	2x38	**D50A, D65A, D80A**
	2x160	2x84	2x52	2x42	2x30	2x234	2x152	2x92	2x74	2x54	**D80, D95**
	2x320	2x170	2x104	2x86	2x60	2x570	2x306	2x186	2x150	2x110	**D115, D150**
	2x384	2x204	2x126	2x102	2x74	2x686	2x368	2x222	2x180	2x132	**G185**
	2x416	2x220	2x136	2x112	2x80	2x742	2x400	2x242	2x196	2x144	**G225**
	2x480	2x254	2x158	2x128	2x92	2x856	2x462	2x278	2x226	2x166	**G265**
	2x544	2x288	2x178	2x146	2x104	2x970	2x522	2x316	2x256	2x188	**G330**
	2x688	2x366	2x226	2x184	2x132	2x1228	2x662	2x400	2x324	2x238	**G400**
	2x928	2x494	2x304	2x248	2x178	2x1656	2x892	2x540	2x438	2x322	**G500**
	2x1258	2x668	2x414	2x338	2x242	2x2246	2x1210	2x730	2x592	2x436	**G630, G800**

(1) Validation tests have not been carried out with Deca Green contactors.



Usual values

The tables show the following values:
- IB: value of current drawn by each lamp at its rated voltage
- C: unit capacitance for each lamp

corresponding to the values normally quoted by lamp manufacturers.

These values are given for an ambient temperature of 55 °C (for 40 °C, multiply the number by 1.2).

Low pressure sodium vapour lamps

	Non corrected							With parallel correction							
P (W)	**35**	**55**	**90**	**135**	**150**	**180**	**200**	**35**	**55**	**90**	**135**	**150**	**180**	**200**	
IB (A)	**1.2**	**1.6**	**2.4**	**3.1**	**3.2**	**3.3**	**3.4**	**0.3**	**0.4**	**0.6**	**0.9**	**1**	**1.2**	**1.3**	
C (µF)	**–**	**–**	**–**	**–**	**–**	**–**	**–**	**17**	**17**	**25**	**36**	**36**	**36**	**36**	**LC1 (1)**
Max. no. of lamps according to P (W)	6	5	3	2	2	2	2	–	–	–	–	–	–	–	**K09**
	10	7	5	3	3	3	3	40	30	–	–	–	–	–	**D09, D12**
	12	9	6	4	4	4	4	50	37	25	–	–	–	–	**D18**
	15	11	7	6	5	5	5	63	47	31	21	19	15	14	**D25**
	21	16	10	8	8	7	7	86	65	43	28	26	21	20	**D32, D38**
	27	20	13	10	10	10	9	110	82	55	36	33	27	25	**D40A**
	35	26	17	13	13	12	12	140	105	70	46	42	35	32	**D50A, D65A, D80A**
	50	37	25	19	18	18	17	200	150	100	66	60	50	46	**D80, D95**
	100	75	50	38	36	36	34	400	300	200	132	120	100	92	**D115, D150**
	140	104	70	54	52	50	48	560	420	280	186	168	140	128	**G185**
	152	114	76	58	56	54	54	606	454	302	202	182	152	140	**G225**
	174	130	88	68	66	64	62	700	524	350	232	210	174	162	**G265**
	198	148	98	76	74	72	70	792	594	396	264	238	198	182	**G330**
	250	188	124	96	94	90	88	1002	752	502	334	300	250	252	**G400**
	338	254	168	130	126	122	118	1352	1014	676	450	406	338	312	**G500**
	496	372	248	192	186	180	174	1982	1488	992	660	594	496	458	**G630, G800**

High pressure sodium vapour lamps

	Non corrected					With parallel correction					
P (W)	**150**	**250**	**400**	**700**	**1000**	**150**	**250**	**400**	**700**	**1000**	
IB (A)	**1.9**	**3.2**	**5**	**8.8**	**12.4**	**0.84**	**1.4**	**2.2**	**3.9**	**5.5**	
C (µF)	**–**	**–**	**–**	**–**	**–**	**20**	**32**	**48**	**96**	**120**	**LC1 (1)**
Max. no. of lamps according to P (W)	4	2	1	–	–	–	–	–	–	–	**K09**
	6	3	2	1	–	–	–	–	–	–	**D09, D12**
	7	4	3	1	1	17	–	–	–	–	**D18**
	10	5	3	2	1	22	13	8	–	–	**D25**
	13	8	5	2	2	30	18	11	6	–	**D32, D38**
	17	10	6	3	2	39	23	15	8	6	**D40A**
	22	13	8	4	3	50	30	19	10	7	**D50A, D65A, D80A**
	31	18	12	6	4	71	42	27	15	10	**D80, D95**
	62	36	24	12	8	142	84	54	30	20	**D115, D150**
	88	52	34	18	14	200	120	76	42	30	**G185**
	96	56	36	20	16	216	130	82	46	32	**G225**
	110	66	42	24	18	250	150	94	54	38	**G265**
	124	74	48	26	20	282	170	108	60	42	**G330**
	158	94	60	34	24	358	214	136	76	54	**G400**
	214	126	80	46	32	482	290	184	104	74	**G500**
	312	186	118	68	48	708	424	270	152	108	**G630, G800**

(1) Validation tests have not been carried out with Deca Green contactors.



Usual values

The tables show the following values:
- IB: value of current drawn by each lamp at its rated voltage
- C: unit capacitance for each lamp

corresponding to the values normally quoted by lamp manufacturers.

These values are given for an ambient temperature of 55 °C (for 40 °C, multiply the number by 1.2).

High pressure mercury vapour lamps

	Non corrected							With parallel correction							
P (W)	**50**	**80**	**125**	**250**	**400**	**700**	**1000**	**50**	**80**	**125**	**250**	**400**	**700**	**1000**	
IB (A)	**0.54**	**0.81**	**1.20**	**2.30**	**4.10**	**6.80**	**9.90**	**0.3**	**0.45**	**0.67**	**1.3**	**2.3**	**3.8**	**5.5**	
C (µF)	**–**	**–**	**–**	**–**	**–**	**–**	**–**	**10**	**10**	**10**	**18**	**25**	**40**	**60**	**LC1 (1)**
Max. no. of lamps according to P (W)	14	9	6	3	1	–	–	–	–	–	–	–	–	–	**K09**
	22	14	9	5	2	1	1	40	26	17	9	–	–	–	**D09, D12**
	27	18	12	6	3	2	1	50	33	22	11	6	–	–	**D18**
	35	23	15	8	4	2	1	63	42	28	14	8	5	3	**D25**
	48	32	21	11	6	3	2	86	57	38	20	11	6	4	**D32, D38**
	61	40	27	14	8	4	3	110	73	49	25	14	8	6	**D40A**
	77	51	34	17	10	6	4	140	93	62	32	18	11	7	**D50A, D65A, D80A**
	111	74	49	26	14	8	6	200	133	89	46	26	15	10	**D80, D95**
	222	148	100	52	28	16	12	400	266	178	92	52	30	20	**D115, D150**
	310	206	140	72	40	24	17	560	372	250	128	72	44	30	**G185**
	336	224	152	78	44	26	18	606	404	272	140	78	48	32	**G225**
	388	258	174	90	50	30	20	700	466	312	162	90	54	38	**G265**
	440	294	198	102	58	34	24	792	528	354	182	102	62	42	**G330**
	556	372	250	130	72	44	30	1002	668	448	232	130	78	54	**G400**
	752	500	338	176	98	60	40	1352	902	606	312	176	106	74	**G500**
	1102	734	496	258	144	88	60	1982	1322	888	458	258	156	108	**G630, G800**

Metal iodine vapour lamps

	Non corrected				With parallel correction				
P (W)	**250**	**400**	**1000**	**2000**	**250**	**400**	**1000**	**2000**	
IB (A)	**2.5**	**3.6**	**9.5**	**20**	**1.4**	**2**	**5.3**	**11.2**	
C (µF)	**–**	**–**	**–**	**–**	**32**	**32**	**64**	**140**	**LC1 (1)**
Max. no. of lamps according to P (W)	3	2	–	–	–	–	–	–	**K09**
	4	3	1	–	–	–	–	–	**D09, D12**
	6	4	1	–	–	–	–	–	**D18**
	7	5	2	–	13	9	–	–	**D25**
	10	7	2	1	18	13	4	–	**D32, D38**
	13	9	3	1	23	16	6	–	**D40A**
	16	11	4	2	30	21	7	–	**D50A, D65A, D80A**
	24	16	6	3	42	30	11	5	**D80, D95**
	48	32	12	6	84	60	22	10	**D115, D150**
	66	46	18	8	120	84	32	14	**G185**
	72	50	20	10	130	90	34	16	**G225**
	84	58	22	12	150	104	40	18	**G265**
	94	66	24	14	170	118	44	20	**G330**
	120	84	32	16	214	150	56	26	**G400**
	162	112	42	20	290	202	76	36	**G500**
	238	164	62	30	424	298	112	52	**G630, G800**

(1) Validation tests have not been carried out with Deca Green contactors.

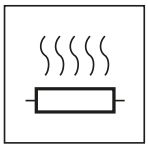

Selection

General

A heating circuit is a power switching circuit supplying one or more resistive heating elements switched by a contactor. The same general rules apply as for motor circuits, except that heating circuits are not normally subjected to overload currents. It is therefore only necessary to provide short-circuit protection.

Characteristics of heating elements

The examples below are based on resistive heating elements used for industrial furnaces or for the heating of buildings (infra-red or resistive radiant type, convector heaters, closed loop heating circuits, etc.). The variation in resistance values between hot and cold states causes a current peak at switch-on which never exceeds 2 to 3 times the rated operational current (In). This initial peak does not recur during normal operation where subsequent switching is thermostatically controlled. The rated power and current of a heater are given for the normal operating temperature.

Protection

The steady state current drawn by a heating circuit is constant when the voltage is stable. In fact:

- it is unlikely that the number of loads in an existing circuit will be modified
- this type of circuit cannot create overloads. It is therefore only necessary to provide short-circuit protection.

This can be provided by:

- gG type fuses, or
- modular circuit breakers.

Nevertheless, it is always possible and sometimes more economical (smaller cable size) to protect the circuit by a thermal overload relay and associated aM type fuses.

Switching, control, protection

A heating element or group of heating elements of a given power may be either single-phase or 3-phase and may be supplied from a 220/127 V or a 400/230 V distribution system. Excluding a single-phase 127 V system (which is no longer commonly used), the following 3 types of circuit arrangement are possible:

- single-phase, 2-pole switching
- single-phase, 4-pole switching
- 3-phase switching

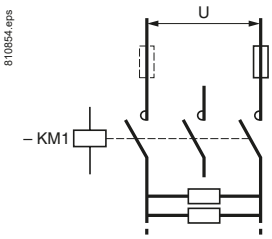

Circuit controlled by 2 poles of the contactor.

Component selection according to the power switched

The combinations suggested below are based on an ambient temperature of 55 °C (60 °C for Giga contactors LC1G) and for powers at the nominal voltage, but they also ensure switching in the event of prolonged overloads up to 1.05 Ue.

Single-phase, 2-pole switching

Maximum power (kW)				Contactor rating
220/240 V	380/415 V	660/690 V	1000 V	
3.5	6.5	11	–	**LC1K09, LP1K09**
4.5	8	14	–	**LC1D12**
6	10.5	18.5	–	**LC1D18**
7	13	22.5	–	**LC1D25**
10	18	30.5	–	**LC1D32, LC1D38**
13	22.5	39.5	–	**LC1D40A**
16.5	28.5	43.5	–	**LC1D65A, LC1D80A**
24	42	73	82.5	**LC1D80, LP1D80**
44	76	118	157	**LC1D115, LC1D150**
270	460	715	945	**LC1F780**

Maximum power (kW)				Contactor rating
230 V	400 V	690 V	1000 V	
40	75	125	185	**LC1G115**
45	80	140	205	**LC1G150**
50	90	155	225	**LC1G185**
55	100	170	250	**LC1G225**
65	115	200	290	**LC1G265**
75	130	230	330	**LC1G330**
95	165	285	415	**LC1G400**
115	200	345	500	**LC1G500**
150	265	460	665	**LC1G630**
150	265	460	665	**LC1G800**

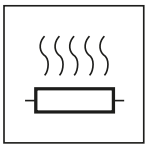

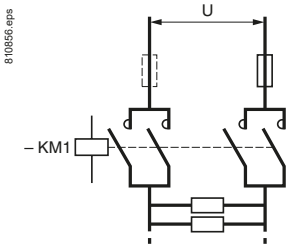

Circuit controlled by a 4-pole contactor with the poles parallel connected in pairs using appropriate connecting links.
This solution enables the control of power values approximately equivalent to those controlled by the same contactor on 3-phase.

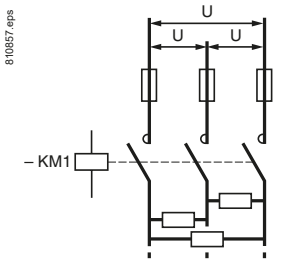

Circuit controlled by 3 poles of the contactor.

Component selection according to the power switched

Single-phase, 4-pole switching

Maximum power (kW)				Contactor rating
220/240 V	380/415 V	660/690 V	1000 V	
4.5	8	13.5	–	**LC1K09004, LP1K09004**
7	13	22.5	–	**LC1DT25**
12	21	36.5	–	**LC1DT40**
26	45.5	79.5	–	**LC1DT80A**
38	66	117.5	132	**LC1D80004, LP1D80004**
425	735	1140	1520	**LC1F7804**

Maximum power (kW)				Contactor rating
230 V	400 V	690 V	1000 V	
65	120	205	300	**LC1G1154**
75	130	230	330	**LC1G1504**
80	145	250	365	**LC1G1854**
90	160	275	400	**LC1G2254**
105	185	320	465	**LC1G2654**
120	210	365	530	**LC1G3304**
150	265	460	665	**LC1G4004**
180	320	550	800	**LC1G5004**
245	425	735	1065	**LC1G6304**
245	425	735	1065	**LC1G8004**

3-phase switching

Maximum power (kW)				Contactor rating
220/240 V	380/415 V	660/690 V	1000 V	
4.5	8	13.5	–	**LC1K09, LP1K09**
7	13	22.5	–	**LC1D12**
10	18	30.5	–	**LC1D18**
13	22.5	39.5	–	**LC1D25**
18	31	52.5	–	**LC1D32, LC1D38**
22.5	38	68	–	**LC1D40A**
28.5	49	86	–	**LC1D65A, LC1D80A**
40.5	70.5	126	135.5	**LC1D80, LP1D80**
83	140	235	345	**LC1D115, LC1D150**
570	1000	1650	2400	**LC1F780**

Maximum power (kW)				Contactor rating
230 V	400 V	690 V	1000 V	
70	125	220	320	**LC1G115**
80	140	245	360	**LC1G150**
90	155	270	395	**LC1G185**
95	170	295	430	**LC1G225**
115	200	345	505	**LC1G265**
130	230	395	575	**LC1G330**
165	285	495	720	**LC1G400**
195	345	595	865	**LC1G500**
265	460	795	1150	**LC1G630**
265	460	795	1150	**LC1G800**

Application example

For a 220 V, 50 Hz, single-phase circuit supplying a total heating load of 12.5 kW.
Select a 3-pole contactor **LC1D65A**.

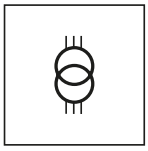

Operating conditions

Maximum ambient temperature: 55 °C.

When a transformer is switched on, there is generally an initial current surge which reaches its peak value almost instantaneously and then decreases in a largely exponential manner to quickly reach its steady state value.

The value of this current depends on:
- the characteristics of the magnetic circuit and of the windings (cross sectional area of the core, rated inductance, number of turns, layout and size of the windings, ...)
- the performance of the magnetic laminations used
- the magnetic state of the circuit and the instantaneous value of the a.c. mains voltage at the moment of switch-on.

The inrush current at the moment of switch-on can reach 20 to 40 times the rated current for the various kVA power ratings in the tables below. This value is independent of the “no-load” or “on-load” state of the transformer.

Contactor selection

The peak magnetising current of the transformer must be lower than the values given in the tables below.
Maximum operating rate: 120 operating cycles/hour.

Contactor rating (1)			**LC1/ LP1 K06**	**LC1/ LP1 K09**	**LC1 D09**	**LC1 D12**	**LC1 D18**	**LC1 D25**	**LC1 D32**	**LC1 D38**	**LC1 D40A**	**LC1 D50A**	**LC1 D65A D80A**	**LC1 D80**	**LC1 D95**	**LC1 D115**	**LC1 D150**	**LC1 F780**
Maximum permissible current peak at switch-on		**A**	160	225	350	350	420	630	770	770	1100	1250	1400	1550	1650	1800	2000	12 000
Maximum operational power (2)	220 V 240 V	**kVA**	2	2.5	4	4	5	7	8.5	8.5	14	16	18	19.5	19.5	25	25	175
	380 V 400 V	**kVA**	3.5	5	7	7	8	12.5	15	15	24	27	31	34	34	50	50	280
	415 V 440 V	**kVA**	4	5.5	8	8	9	14	17	17	28	32	36	39	39	55	55	310
	500 V	**kVA**	5	7	9	9	11	16.5	20	20	32	36	40	45	45	65	65	350
	660 V 690 V	**kVA**	6	8.5	12	12	14	21.5	26.5	26.5	42	48	53	59	59	80	80	400
	1000 V	**kVA**	–	–	–	–	–	–	–	–	–	–	–	85	95	100	100	650

(1) Deca Green contactors have not been validated for switching the primaries of 3-phase LV/LV transformers.
(2) Maximum operational power corresponding to a current peak at switch-on of 30 In.



Standard contactors

Capacitors, together with the circuits to which they are connected, form oscillatory circuits which can, at the moment of switch-on, give rise to high transient currents (> 180 In) at high frequencies (1 to 15 kHz).
As a general rule, the peak current on energisation is lower when:

- the mains inductances are high
- the line transformer ratings are low
- the transformer short-circuit voltage is high
- the ratio between the sum of the ratings of the capacitors already switched into the circuit and that of the capacitor to be switched in is small (for multiple step capacitor banks).

In accordance with standards IEC 60070, NF C 54-100, VDE 0560, the switching contactor must be able to withstand a continuous current of 1.43 times the rated current of the capacitor bank step being switched. The rated operational powers given in the tables below take this overload into account. Short-circuit protection is normally provided by gI type HPC fuses rated at 1.7 to 2 In.

Contactor applications

Operating conditions

Capacitors are directly switched. **The values of peak current at switch-on must not exceed the values indicated opposite.**
An inductor may be inserted in each of the three phases supplying the capacitors to reduce the peak current, if necessary. Inductance values are determined according to the selected operating temperature.

Power factor correction by a single-step capacitor bank

The use of a choke inductor is unnecessary: the inductance of the mains supply is adequate to limit the peak to a value compatible with the contactor characteristics.

Power factor correction by a multiple-step capacitor bank

Select a special contactor as defined on page B8/34.
If a standard contactor is used, it is essential to insert a choke inductor in each of the three phases of each step.

Maximum operational power of contactors

Standard contactors

Maximum operating rate: 120 operating cycles/hour.
Electrical durability at maxiumum load: 100 000 operating cycles.
With choke inductors connected, where necessary.

Operational power at 50/60 Hz						Max. peak current	Contactor rating (1)
θ ≤ 40 °C (2)			θ ≤ 55 °C (2)				
220/240 V	400/440 V	600/690 V	220/240 V	400/440 V	600/690 V		
kvAR	kvAR	kvAR	kvAR	kvAR	kvAR	A	
6	11	15	6	11	15	560	**LC1D09, D12**
9	15	20	9	15	20	850	**LC1D18**
11	20	25	11	20	25	1600	**LC1D25**
14	25	30	14	25	30	1900	**LC1D32, D38**
17	30	37	17	30	37	2160	**LC1D40**
22	40	50	22	40	50	2160	**LC1D50**
22	40	50	22	40	50	3040	**LC1D65**
35	60	75	35	60	75	3040	**LC1D80, D95**
50	90	125	38	75	80	3100	**LC1D115**
60	110	135	40	85	90	3300	**LC1D150**

(1) Deca Green contactors have not been validated for switching the primaries of 3-phase LV/LV transformers.
(2) Upper limit of temperature category conforming to IEC 60070.

Operational power at 50/60 Hz						Max. peak current	Contactor rating
θ ≤ 40 °C (3)			θ ≤ 60 °C (3)				
220/240 V	400/440 V	600/690 V	220/240 V	400/440 V	600/690 V		
kvAR	kvAR	kvAR	kvAR	kvAR	kvAR	A	
50	90	150	45	80	135	1900	**LC1G115**
55	100	165	50	90	150	2480	**LC1G150**
60	110	185	55	100	165	3050	**LC1G185**
65	120	200	60	110	180	3710	**LC1G225**
75	140	235	70	125	210	4370	**LC1G265**
85	160	265	80	145	240	5450	**LC1G330**
110	200	335	100	185	305	6600	**LC1G400**
140	255	425	120	220	365	8250	**LC1G500**
210	385	640	160	295	485	10400	**LC1G630**
210	385	640	160	295	485	13200	**LC1G800**

(3) Upper limit of temperature category conforming to IEC 60831-1.

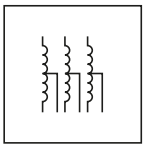

Applications

Auto-transformer starting is suitable for starting all types of squirrel cage motors: with 3, 6 or even 9 terminals according to North American technology.
Starting is performed at reduced voltage and produces maximum torque at minimum line current.
It allows the starting torque ($C = f(U)^2$) to be adapted to the resistive torque of the driven machine by means of the 2 or 3 intermediate voltage take-off connections on the auto-transformer (0.65 and 0.8 Un or 0.5, 0.65 and 0.8 Un). In general, only one take-off connection is used.
This type of starting is used for high power and/or high inertia machines.
The motor is never disconnected from its power supply during starting (closed transition) and transient phenomena are eliminated.

Recommended wiring scheme

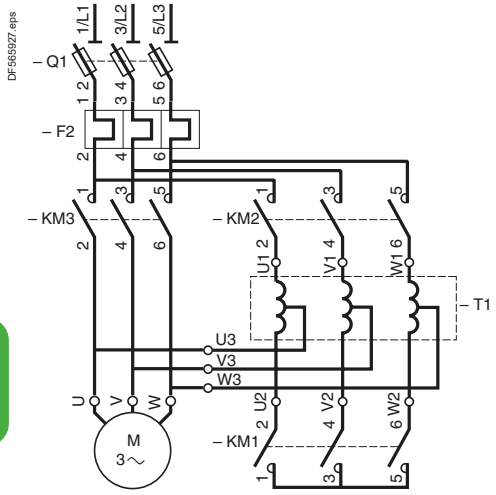

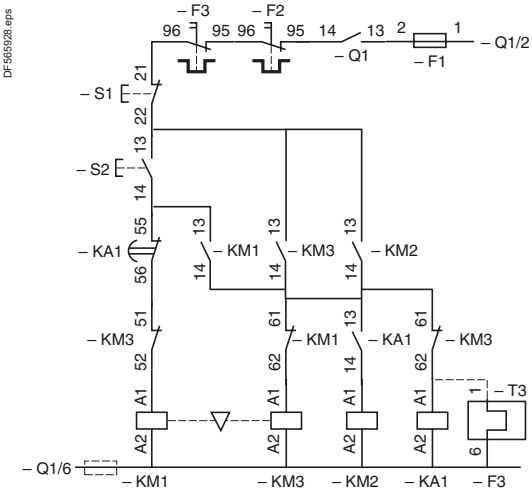

Operation

Starting is performed in 3 stages:
- star connection of the auto-transformer is made by KM1, then contactor KM2 closes and the motor starts under reduced voltage
- the neutral point is opened by KM1; part of the auto-transformer winding is switched into each phase for a short moment, constituting a stator starting inductance
- KM3 switches the motor to full mains voltage and causes the auto-transformer to be shunted out of circuit by KM2.

The auto-transformer used generally has an air gap (adjusted or not) in order to obtain, during the second phase of starting, a series inductance whose value is compatible with correct starting.

Operating curves

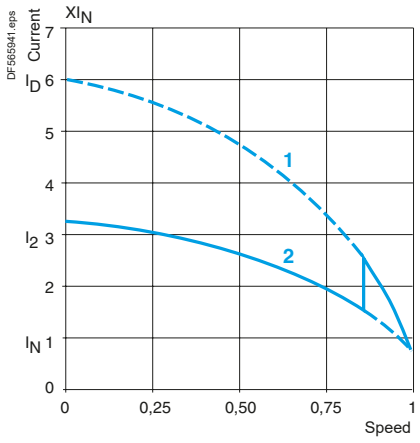

1 Direct switching current
2 Current with auto-transformer

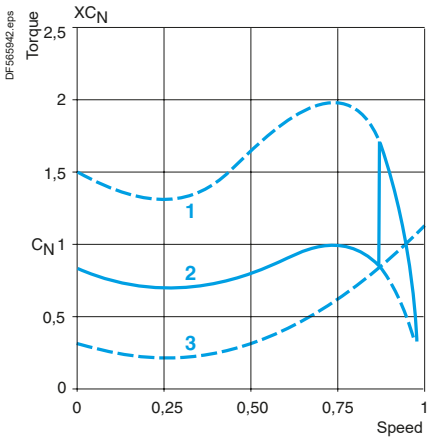

1 Direct motor torque
2 Torque with auto-transformer
3 Resistive torque of the machine

(1) Deca Green contactors have not been validated for auto-transformer starting.

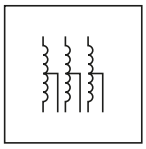

Auto-transformer starters from 59 to 900 kW up to 440 V (type 1 coordination)

The components recommended in the table below have been determined according to the following characteristics:
- auto-transformer: on 0.65 Un connection with non adjusted air gap
- 3 starts per hour, of which 2 consecutive
- motor starting current: Id/In = 6
- Iq = 70 kA
- transient current on closing of KM3 ⩽ 7 $\sqrt{2}$ In
- maximum starting time: 30 seconds
- ambient temperature θ ⩽ 40 °C.

Switch-disconnector-fuses: operators and accessories, please consult your Regional Sales Office.
Contactors: 3-pole.
LC1D: see pages B8/22 and B8/27.

Auxiliary contact blocks:
- for contactors LC1D: one LADN11 (1 N/O + 1 N/C) on KM1.

Thermal overload relays:
- LR: see pages B11/4 to B11/9
- LR9D: see pages B11/5 to B11/9.

Standard power ratings of 3-phase motors 50/60 Hz in category AC-3					Switch-disconnector-fuse Reference	aM fuses		Contactors (1)			Overload relays	
						Size	Rating	KM3 LC1	KM2 LC1	KM1 LC1	Reference (2)	Setting range
220/ 230 V	380/ 400 V	415 V	440 V	In max								
kW	kW	kW	kW	A			A					A
30	55	59	59	105	**GS●K**	22 x 58	125	**D115**	**D115**	**D3210**	**LR9D5369**	90…150
											LRD4367	95…120
40	75	80	80	138	**GS●L**	T0	160	**D150**	**D115**	**D5011**	**LR9D5369**	90…150
											LRD4369	110…140

(1) Deca Green contactors have not been validated for auto-transformer starting.
(2) For power ratings greater than or equal to 400 kW at 415 V, use one LRD-05 on the current transformer.
(3) Check with the motor manufacturer whether the fuses should be fitted in parallel.

Voltage drop caused by the inrush current

When the operating coil of a contactor is energised, the inrush current produces a voltage drop in the control circuit cable caused by the resistance of the conductors, which can adversely affect closing of the contactor.
An excessive voltage drop in the control supply cables (both a.c. and d.c.) can lead to non closure of the contactor poles or even destruction of the coil due to overheating.
This phenomenon is aggravated by:

- a long line
- a low control circuit voltage
- a cable with a small c.s.a.
- a high inrush power drawn by the coil.

The maximum length of cable, depending on the control voltage, the inrush power and the conductor c.s.a., is indicated in the graphs below.

Remedial action

To reduce the voltage drop at switch-on:

- increase the conductor c.s.a.
- use a higher control circuit voltage
- use an intermediate control relay.

Selection of conductor c.s.a.

These graphs are for a maximum line voltage drop of 5 %. They give a direct indication of the copper conductor c.s.a. to be used for the control cable, depending on its length, the inrush power drawn by the contactor coil and the control circuit voltage (see example page A5/81).

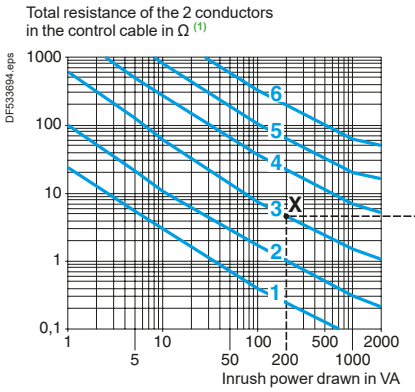

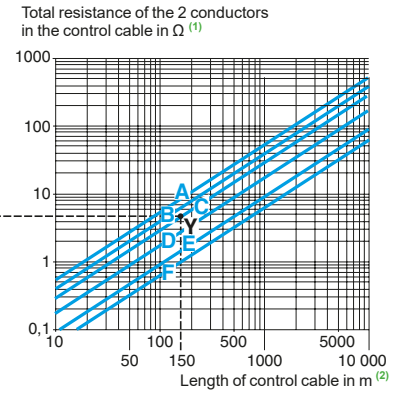

1 ∼ 24 V	3 ∼ 115 V	5 ∼ 400 V

C.s.a. of copper cables		
A 0.75 mm²	C 1.5 mm²	E 4 mm²

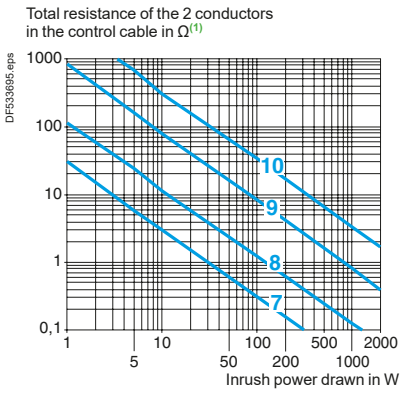

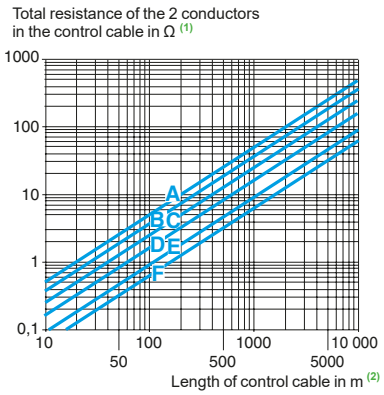

2 ∼ 48 V	4 ∼ 230 V	6 ∼ 690 V

B 1 mm²	D 2.5 mm²	F 6 mm²

7 ⎓ 24 V	9 ⎓ 125 V
8 ⎓ 48 V	10 ⎓ 250 V

C.s.a. of copper cables		
A 0.75 mm²	C 1.5 mm²	E 4 mm²
B 1 mm²	D 2.5 mm²	F 6 mm²

(1) For 3-wire control, the current only flows in 2 of the conductors.
(2) This is the length of the cable comprising 2 or 3 conductors. (Distance between the contactor and the control device).

Life Is On Schneider Electric

Voltage drop caused by the inrush current

What cable c.s.a. is required for the control circuit of an LC1 D40A, 115 V contactor, operated from a distance of 150 metres?

■ Contactor LC1D40A, voltage 115 V, 50 Hz: inrush power: 200 VA.

On the left-hand graph on the page opposite, point X is at the intersection of the vertical line corresponding to 200 VA and the ∿ 115 V voltage curve.

On the right-hand graph on the page opposite, point Y is at the intersection of the vertical line corresponding to 150 m and the horizontal line passing through point X.

Use the conductor c.s.a. indicated by the curve which passes through point Y, i.e.: 1.5 mm^2.

If point Y lies between two c.s.a. curves, choose the larger of the c.s.a. values.

Calculating the maximum cable length

The maximum permissible length for acceptable line voltage drop is calculated by the formula:

$$L = \frac{U^2}{SA} .s.K$$

where:

L : distance between the contactor and the control device in m (length of the cable)
U : supply voltage in V
SA : apparent inrush power drawn by the coil in VA
s : conductor c.s.a. in mm^2
K : factor given in the table below.

a.c. supply	**SA in VA**	**20**	**40**	**100**	**150**	**200**
	K	1.38	1.5	1.8	2	2.15

d.c. supply	Irrespective of the apparent inrush power SA, expressed in W
	K = 1.38

Residual current in the coil due to cable capacitance

When the control contact of a contactor is opened, the control cable capacitance is effectively in series with the coil of the electromagnet. This capacitance can cause a residual current to be maintained in the coil, with the risk that the contactor will remain closed.

This only applies to contactors operating on an a.c. supply.

This phenomenon is aggravated by:
- a long line length between the coil control contact and the contactor, or between the coil control contact and the power supply,
- a high control circuit voltage,
- a low coil consumption, sealed,
- a low value of contactor drop-out voltage.

The maximum control cable length, according to the contactor coil supply voltage, is indicated in the graph on the page opposite.

Remedial action

Various solutions can be adopted to avoid the risk of the contactor remaining closed due to cable capacitance:
- use a d.c. control voltage, or
- add a rectifier, connected as shown in the scheme below, but retaining an a.c. operating coil: in this way, rectified a.c. current flows in the control cable.

When calculating the maximum cable length, take the resistance of the conductors into account.

.

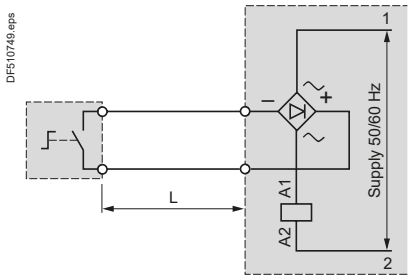

- Connect a resistor in parallel with the contactor coil (1).

Value of the resistance:

$$R\ \Omega = \frac{1}{10^{-3}\ C\ (\mu F)}\ \text{(C capacitance of the control cable)}$$

Power to be dissipated:

$$PW = \frac{U^2}{R}$$

(1) To avoid increasing the voltage drop due to inrush current, this resistor must be brought into operation after the contactor has closed by using an N/O contact.

Life Is On Schneider Electric

Residual current in the coil due to cable capacitance

These graphs are for a capacitance, between 2 conductors, of 0.2 µF/km. They make it possible to determine whether there is a risk of the contactor remaining closed due to the power drawn by the coil when sealed, as well as the control circuit voltage, according to the length of the control cable.

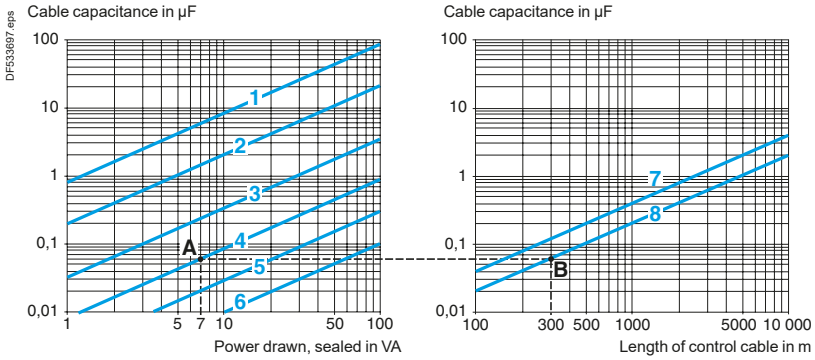

1	∼ 24 V	3	∼ 115 V	5	∼ 400 V	7	3-wire control
2	∼ 48 V	4	∼ 230 V	6	∼ 690 V	8	2-wire control

In the zones below the straight lines for 3-wire and 2-wire control respectively, there is a risk of the contactor remaining closed.

Examples

What is the maximum length for the control cable of an LC1D12 contactor, operating on 230 V, with 2-wire control?

■ Contactor LC1D12, voltage 230 V, 50 Hz: power sealed 7 VA.

On the left-hand graph, point A is at the intersection of the vertical line for 7 VA with the ∼ 230 V voltage curve.

On the right-hand graph, point B is at the intersection of the horizontal line with the 2-wire control curve.

The maximum cable length is therefore 300 m.

In the same example, with a 600 m cable, the point lies in the risk zone. A resistor must therefore be connected in parallel with the contactor coil.

$$R = \frac{1}{10^{-3} \cdot C} = \frac{1}{10^{-3} \cdot 0.12} = 8.3\ \Omega$$

Value of this resistance:

$$P = \frac{U^2}{R} = \frac{(220)^2}{8300} = 6\ W$$

Power to be dissipated:

Alternative solution: use a d.c. control supply.

Calculating the cable length

The maximum permitted length of control cable to avoid the effects of capacitance is calculated using the formula:

$$L = 455 \cdot \frac{S}{U^2.Co}$$

L : distance between the contactor and the control device in km (length of the cable),
S : apparent power, sealed, in VA,
U : control voltage in V,
Co : line capacitance of the cable in µF/km.

3-phase 4-pole motors

Current values for power in kW

Rated operational power (1)	Indicative rated operational current values at:			
	230 V	400 V	500 V	690 V
kW	A			
0.06	0.35	0.2	0.16	0.12
0.09	0.52	0.3	0.24	0.17
0.12	0.7	0.44	0.32	0.23
0.18	1	0.6	0.48	0.35
0.25	1.5	0.85	0.68	0.49
0.37	1.9	1.1	0.88	0.64
0.55	2.6	1.5	1.2	0.87
0.75	3.3	1.9	1.5	1.1
1.1	4.7	2.7	2.2	1.6
1.5	6.3	3.6	2.9	2.1
2.2	8.5	4.9	3.9	2.8
3	11.3	6.5	5.2	3.8
4	15	8.5	6.8	4.9
5.5	20	11.5	9.2	6.7
7.5	27	15.5	12.4	8.9
11	38	22	17.6	12.8
15	51	29	23	17
18.5	61	35	28	21
22	72	41	33	24
30	96	55	44	32
37	115	66	53	39
45	140	80	64	47
55	169	97	78	57
75	230	132	106	77
90	278	160	128	93
110	340	195	156	113
132	400	230	184	134
160	487	280	224	162
200	609	350	280	203
250	748	430	344	250
315	940	540	432	313
355	1061	610	488	354
400	1200	690	552	400
500	1478	850	680	493
560	1652	950	760	551
630	1844	1060	848	615
710	2070	1190	952	690
800	2340	1346	1076	780
900	2640	1518	1214	880
1000	2910	1673	1339	970

Current values for power in hp

Rated operational power (2)	Indicative rated operational current values at:						
	110 - 120 V	200 V	208 V	220 - 240 V	380 - 415 V	440 - 480 V	550 - 600 V
hp	A						
1/2	4.4	2.5	2.4	2.2	1.3	1.1	0.9
3/4	6.4	3.7	3.5	3.2	1.8	1.6	1.3
1	8.4	4.8	4.6	4.2	2.3	2.1	1.7
1 1/2	12	6.9	6.6	6	3.3	3	2.4
2	13.6	7.8	7.5	6.8	4.3	3.4	2.7
3	19.2	11	10.6	9.6	6.1	4.8	3.9
5	30.4	17.5	16.7	15.2	9.7	7.6	6.1
7 1/2	44	25.3	24.2	22	14	11	9
10	56	32.2	30.8	28	18	14	11
15	84	48.3	46.2	42	27	21	17
20	108	62.1	59.4	54	34	27	22
25	136	78.2	74.8	68	44	34	27
30	160	92	88	80	51	40	32
40	208	120	114	104	66	52	41
50	260	150	143	130	83	65	52
60	-	177	169	154	103	77	62
75	-	221	211	192	128	96	77
100	-	285	273	248	165	124	99
125	-	359	343	312	208	156	125
150	-	414	396	360	240	180	144
200	-	552	528	480	320	240	192
250	-	-	-	604	403	302	242
300	-	-	-	722	482	361	289
350	-	-	-	828	560	414	336
400	-	-	-	954	636	477	382
450	-	-	-	1030	–	515	412
500	-	-	-	1180	786	590	472

(1) Values conforming to standard IEC 60072-1 (at 50 Hz).
(2) Values conforming to standard UL 508 (at 60 Hz).

***Note:** These values are given as a guide. They may vary depending on the type of motor, its polarity and the manufacturer.*

Standardisation

Conformity to standards

Schneider Electric products satisfy, in the majority of cases, national (for example: BS in Great Britain, NF in France, DIN in Germany), European (for example: CENELEC) or international (IEC) standards. These product standards precisely define the performance of the designated products (such as IEC 60947 series for low voltage equipment).
When used correctly, as designated by the manufacturer and in accordance with regulations and correct practices, these products will allow users to build equipment, machine systems or installations that conform to their appropriate standards (for example: IEC 60204-1, relating to electrical equipment used on industrial machines).
Schneider Electric is able to provide proof of conformity of its production to the standards it has chosen to comply with, through its quality assurance system.
On request, and depending on the situation, Schneider Electric can provide the following:
- a declaration of conformity,
- a certificate of conformity (CB certificate, Asefa/Lovag),
- a homologation certificate or approval, in the countries where this procedure is required or for particular specifications, such as those existing in the merchant navy.

Standard	Certification authority		Country
	Name	Regulation authority	
ANSI	American National Standards Institute	ANSI	USA
BS	British Standards Institution	BSI	Great Britain
CEI	Comitato Elettrotecnico Italiano	CEI	Italy
DIN/VDE	Verband Deutscher Electrotechniker	VDE	Germany
EN	Comité Européen de Normalisation Electrotechnique	CENELEC	Europe
TR Regulation	Eurasian Customs Union	EAC	Russia, Belarus, Kazakhstan
IEC	International Electrotechnical Commission	IEC	Worldwide
JIS	Japanese Industrial Standards Committee	JISC	Japan
NBN	Institut Belge de Normalisation	IBN	Belgium
NEN	Nederlands Normalisatie Institut	NNI	Netherlands
NF	Union Technique de l'Electricité	UTE	France
SAA	Standards Association of Australia	SAA	Australia
UNE	Asociacion Española de Normalizacion y Certificacion	AENOR	Spain

European EN standards

These are technical specifications established in conjunction with, and with approval of, the relative bodies within the various CENELEC member countries (European Union, European Free Trade Association and many central and eastern European countries having «member» or «affiliated» status). Prepared in accordance with the principle of consensus, the European standards are the result of a weighted majority vote. Such adopted standards are then integrated into the national collection of standards, and contradictory national standards are withdrawn.
European standards incorporated within the French collection of standards carry the prefix NF EN. At the 'Union Technique de l'Electricité' *(Technical Union of Electricity)* (UTE), the French version of a corresponding European standard carries a dual number: European reference (NF EN …) and classification index (C …).
Therefore, the standard NF EN 60947-4-1 relating to motor contactors and starters, effectively constitutes the French version of the European standard EN 60947-4-1 and carries the UTE classification C 63-110.
This standard is identical to the British standard BS EN 60947-4-1 or the German standard DIN EN 60947-4-1.
Whenever reasonably practical, European standards reflect the international standards (IEC).
With regard to automation system components and distribution equipment, in addition to complying with the requirements of French NF standards, Schneider Electric brand components conform to the standards of all other major industrial countries.

Regulations

European Directives

Opening up of European markets assumes harmonisation of the regulations pertaining to each of the member countries of the European Union.
The purpose of the European Directive is to eliminate obstacles hindering the free circulation of goods within the European Union, and it must be applied in all member countries. Member countries are obliged to transcribe each Directive into their national legislation and to simultaneously withdraw any contradictory regulations. The Directives, in particular those of a technical nature which concern us, only establish the objectives to be achieved, referred to as "essential requirements".
The manufacturer must take all the necessary measures to ensure that his products conform to the requirements of each Directive applicable to his production.
As a general rule, the manufacturer certifies conformity to the essential requirements of the Directive(s) for his product by affixing the CE marking.
The CE marking is affixed to Schneider Electric brand products concerned, in order to confirm compliance with French and European regulations.

Significance of the CE marking
- The CE marking affixed to a product signifies that the manufacturer declares that the product conforms to the relevant European Directive(s) which concern it; this condition must be met to allow free distribution and circulation within the countries of the European Union of any product subject to one or more of the E.U. Directives.
- The CE marking is intended solely for national market control authorities.
- The CE marking must not be confused with a conformity mark.

European Directives

For electrical equipment, only conformity to standards signifies that the product is suitable for its designated function, and only the guarantee of an established manufacturer can provide a high level of quality assurance.
For Schneider Electric brand products, one or several Directives are likely to be applicable, depending on the product, and in particular:

- the Low Voltage Directive 2014/35/EU: the CE marking relating to this Directive has been compulsory since April 2016.
- the Electromagnetic Compatibility Directive 2014/30/EU: the CE marking on products covered by this Directive has been compulsory since April 2016.

CB certificate, Asefa/Lovag certificate

- CB certification is issued according to IEC standards in respect to a multilateral agreement between almost industrial countries called CB scheme. It allows international certification of electrical and electronic products so that a single certification facilitates a worldwide market access.
- The function of ASEFA (Association des Stations d'Essais Française d'Appareils électriques - *Association of French Testing Stations for Low Voltage Industrial Electrical Equipment)* is to carry out tests of conformity to standards and to issue certificates of conformity and test reports. ASEFA laboratories are authorised by the French authorisation committee (COFRAC). ASEFA is now a member of the European agreement group LOVAG (Low Voltage Agreement Group). This means that any certificates issued by LOVAG/ASEFA are recognised by all the authorities which are members of the group and carry the same validity as those issued by any of the member authorities.

Quality labels

When components can be used in domestic and similar applications, it is sometimes recommended that a "Quality label" be obtained, which is a form of certification of conformity.

Code	Quality label	Country
CEBEC	Comité Electrotechnique Belge	Belgium
KEMA-KEUR	Keuring van Electrotechnische Materialen	Netherlands
NF	Union Technique de l'Electricité	France
ÖVE	Österreichischer Verband für Electrotechnik	Austria
SEMKO	Svenska Electriska Materiel Kontrollanatalten	Sweden

Product certifications

In some countries, the certification of certain electrical components is a legal requirement. In this case, a certificate of conformity to the standard is issued by the official test authority.
Each certified device must bear the relevant certification symbols when these are mandatory:

Code	Certification authority	Country
CSA	Canadian Standards Association	Canada
UL	Underwriters Laboratories	USA
CCC	China Compulsory Certification	China

Note on certifications issued by the Underwriters Laboratories (UL). There are two levels of approval:

"Recognized" (UL) The component is fully approved for inclusion in equipment built in a workshop, where the operating limits are known by the equipment manufacturer and where its use within such limits is acceptable by the Underwriters Laboratories.
The component is not approved as a "Product for general use" because its manufacturing characteristics are incomplete or its application possibilities are limited.
A "Recognized" component does not necessarily carry the certification symbol.

"Listed" (UL) The component conforms to all the requirements of the classification applicable to it and may therefore be used both as a "Product for general use" and as a component in assembled equipment. A "Listed" component must carry the certification.

Marine classification societies

Prior recognition by certain marine classification societies is generally required for electrical equipment which is intended for use on board merchant vessels.
Europe community has emitted regulation No. 391/2009 for common rules for Type approval of Marine equipment.
MR TA Mutual Recognition Type Approval is a certificate that is mutually recognized by all 12 classification societies from the **EU RO MR group** (European Recognized Organizations).
Renewal of marine certifications, or new products certification is now covered by EU-MR (Mutual Recognition) process and therefore removes the need for multiple marine certifications.
Current EU RO members include all major societies like DNV-GL, BV, ABS, LR as well as non-European societies like CCS, KR, NK, RMRS, etc.

Rules	Classification authority	Country
ABS	American Bureau of Shipping	Unites States of America
KRoS	Korean register of Shipping	South Korea
BV	Bureau Veritas	France
DNV-GL	Det Norske Veritas - Germanischer Lloyd	Norway - Germany
LRoS	Lloyd's Register of Shipping	Great Britain
NKK	Nippon Kaiji Kyokaï	Japan
RINA	Registro Italiano Navale	Italy
RMRoS	Russian Maritime Register of Shipping	Russia
CCS	China Classification Society	Republic of China

Note: *for further details on a specific product, please refer to the "Characteristics" pages in this catalogue or consult your Regional Sales Office.*

Degrees of protection against the penetration of solid bodies, water and personnel access to live parts

The European standard EN 60529 dated October 1991, IEC publication 529 (2nd edition - November 1989), defines a coding system (IP code) for indicating the degree of protection provided by electrical equipment enclosures against accidental direct contact with live parts and against the ingress of solid foreign objects or water. This standard does not apply to protection against the risk of explosion or conditions such as humidity, corrosive gasses, fungi or vermin.
Certain equipment is designed to be mounted on an enclosure which will contribute towards achieving the required degree of protection (example : control devices mounted on an enclosure).
Different parts of an equipment can have different degrees of protection (example : enclosure with an opening in the base).
Standard NF C 15-100 (May 1991 edition), section 512, table 51 A, provides a cross-reference between the various degrees of protection and the environmental conditions classification, relating to the selection of equipment according to external factors.
Practical guide UTE C 15-103 shows, in the form of tables, the characteristics required for electrical equipment (including minimum degrees of protection), according to the locations in which they are installed.

IP ●●● code

The IP code comprises **2 characteristic numerals** (e.g. **IP 55**) and may include **an additional letter** when the actual protection of personnel against direct contact with live parts is better than that indicated by the first numeral (e.g. IP 20C).
Any characteristic numeral which is unspecified is replaced by an X (e.g. IP XXB).

1st characteristic numeral

corresponds to protection of the equipment against penetration of solid objects and protection of personnel against direct contact with live parts.

	Protection of the equipment		Protection of personnel
0	Non-protected		Non-protected
1	Ø 50 mm 	Protected against the penetration of solid objects having a diameter greater than or equal to 50 mm	Protected against direct contact with the back of the hand (accidental contacts).
2	Ø 12,5 mm 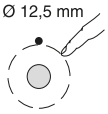	Protected against the penetration of solid objects having a diameter greater than or equal to 12.5 mm.	Protected against direct finger contact.
3	Ø 2,5 mm 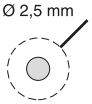	Protected against the penetration of solid objects having a diameter greater than or equal to 2.5 mm.	Protected against direct contact with a Ø2.5 mm tool.
4	Ø 1 mm 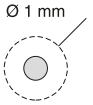	Protected against the penetration of solid objects having a diameter greater than or equal to 1 mm.	Protected against direct contact with a Ø1 mm wire.
5	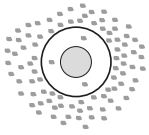	Dust protected (no harmful deposits).	Protected against direct contact with a Ø1 mm wire.
6	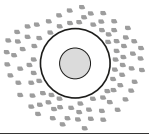	Dust tight.	Protected against direct contact with a Ø1 mm wire.

2nd characteristic numeral

corresponds to protection of the equipment against penetration of water with harmful effects.

0	Non-protected	
1		Protected against vertical dripping water, (condensation).
2	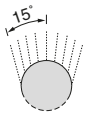	Protected against dripping water at an angle of up to 15°.
3	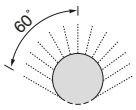	Protected against rain at an angle of up to 60°.
4	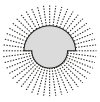	Protected against splashing water in all directions.
5	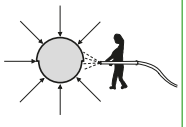	Protected against water jets in all directions.
6	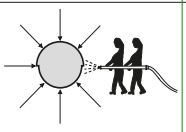	Protected against powerful jets of water and waves.
7	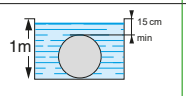	Protected against the effects of temporary immersion.
8	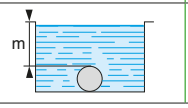	Protected against the effects of prolonged immersion under specified conditions.

Additional letter

corresponds to protection of personnel against direct contact with live parts.

A	With the back of the hand.
B	With the finger.
C	With a Ø2.5 mm tool.
D	With a Ø1 mm wire.

Degrees of protection against mechanical impact

The European standard EN 50102 dated March 1995 defines a coding system (IK code) for indicating the degree of protection provided by electrical equipment enclosures against external mechanical impact.
Standard NF C 15-100 (May 1991 edition), section 512, table 51 A, provides a cross-reference between the various degrees of protection and the environmental conditions classification, relating to the selection of equipment according to external factors.
Practical guide UTE C 15-103 shows, in the form of tables, the characteristics required for electrical equipment (including minimum degrees of protection), according to the locations in which they are installed.

IK ●● code

The IK code comprises **2 characteristic numerals** (e.g. **IK 05**).

2 characteristic numerals

corresponding to a value of impact energy.

		h (cm)	Energy (J)
00	Non-protected		
01	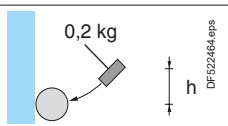	7.5	0.15
02		10	0.2
03		17.5	0.35
04		25	0.5
05		35	0.7
06	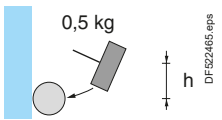	20	1
07		40	2
08	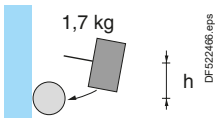	30	5
09	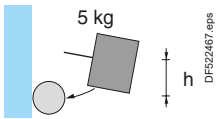	20	10
10		40	20

Life Is On Schneider Electric

Part B

COMPONENTS FOR CONVENTIONAL SOLUTIONS

Linergy BZ, HK
Busbar systems
Up to 630 A

B1/1

GV, LAD, U
Wiring systems for motor starters

B2/1

TeSys Control
Switch-disconnectors
Up to 175 A

B3/1

TeSys Power
Fuse carriers
Up to 125 A

B4/1

TeSys Power
Switch-disconnector fuses
Up to 1250 A

B5/1

TeSys Power
Deca, Giga and Modular
Motor circuit breakers
Up to 250 kW

B6/1

TeSys Control
SK, K, Deca Control relays
Up to 10 A

B7/1

TeSys Control
SK, K, SKGC, Deca, Modular and other Contactors
Up to 150 A (AC-3)

B8/1

TeSys Control
Giga High power contactors
Up to 800 A (AC-3)

B9/1

TeSys Control
F High power contactors
Up to 2600 A (AC-1)
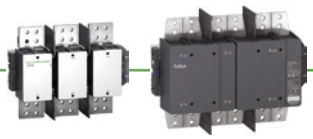
B10/1

TeSys Protect
LRK, Deca, Giga
Overload relays
Up to 630 A

B11/1

Linergy BZ, HK Busbar systems

Busbar systems for electrical distribution and motors starters

Type of product	Range		Pages
Introduction Linergy BZ			B1/2
Multistandard power busbar Linergy BZ	From 160 to 630 A	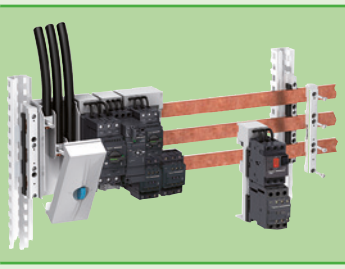	B1/4
Introduction Linergy HK			B1/10
Multistandard hot-plug distribution system Linergy HK	Up to 160 A	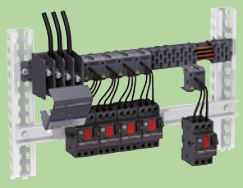	B1/12

Technical Data for Designers B1/17



All Schneider Electric **distribution and connection systems** are brought together into a single brand name: **Linergy**

Distribution blocks
Device feeders
Power busbars
Hot plug busbar system
Terminal blocks and bars.

Catalogue reference: **LVYED213001EN**

Introduction

In enclosures, when space saving and fast connection are a strong requirement

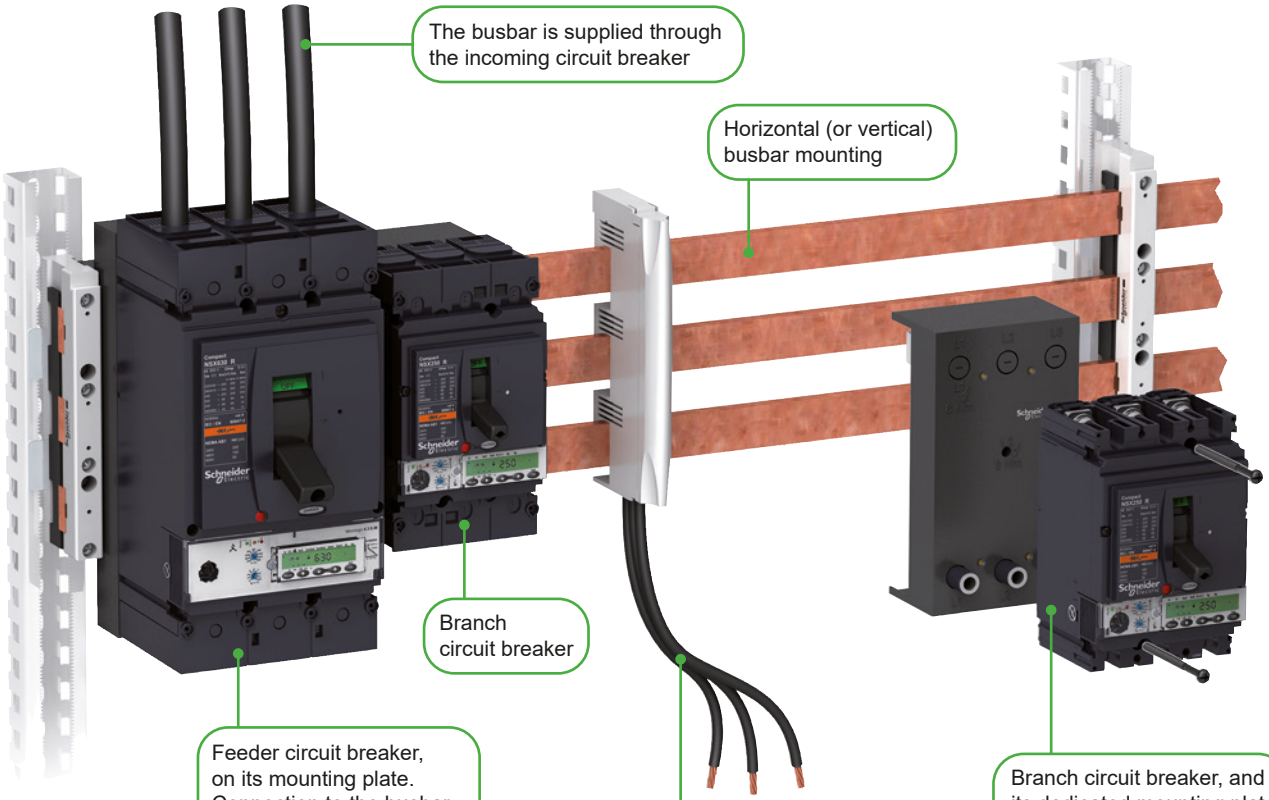

Ideal for industrial process application

Advantages

- Considerable space saving: components are directly mounted on the busbar
- Quick connection, deconnection: a metal hook combines mechanical fastening and electrical connection
- Multi standard: conform to IEC and UL standards

Detailed view: back face of a mounting plate

- Mounting plates, for Compact NSX, Powerpact and GV5 circuit breakers
- Compatible with bars:
  - Height 12, 15, 20, 25 or 30 mm,
  - Width 5 or 10 mm

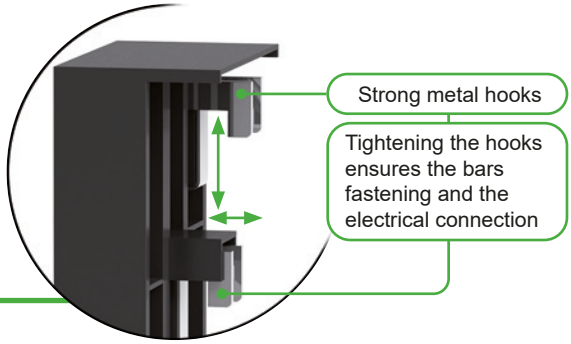

Introduction

In control switchboards, when space saving, quick mounting and replacement are required

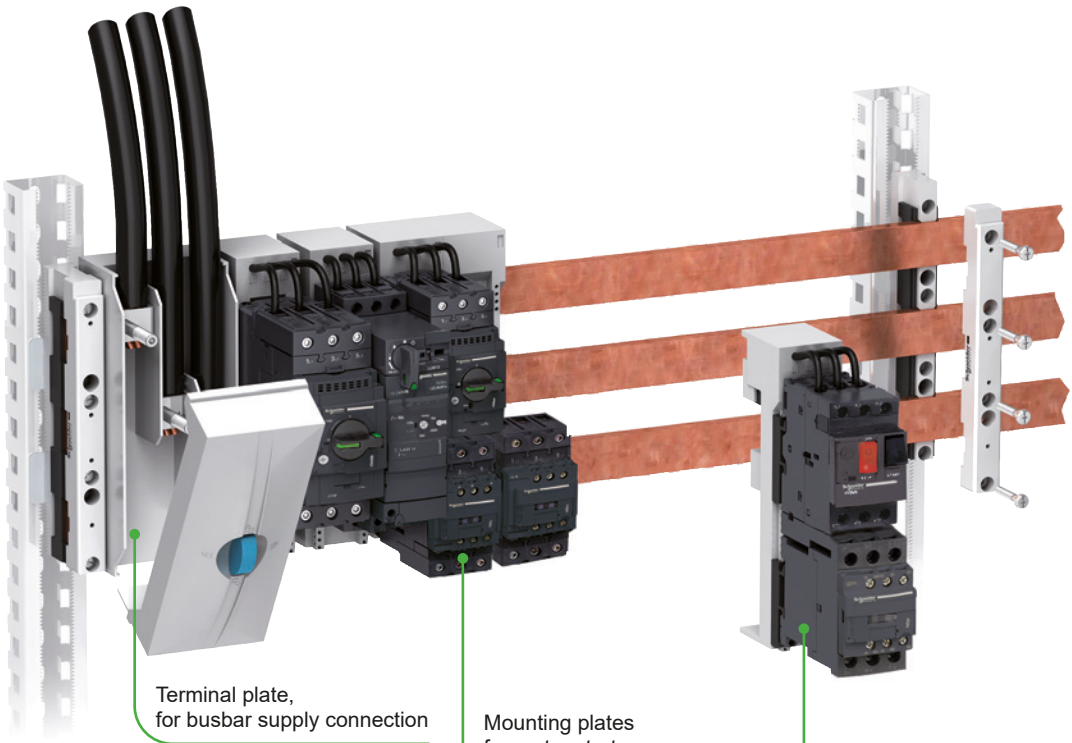

Advantages

- Considerable space saving: components are directly mounted on the busbar
- Large choice of mounting plates (for a Deca Frame 2 (GV2) , a Deca Frame 3 (GV3) motor circuit breakers and assemblies, a Deca Frame 5 (GV5) Ultra)
- Quick connection, deconnection (power off): clip-on mounting plates
- Vibration resistant busbar connections: no periodical re-tightening required
- Multi standard: conform to IEC and UL standards

Detailed view: back face of a motor starter mounting plate

- A reliable electrical contact is ensured by copper blades
- The blue part locks the mounting plate on the busbar, compatibility is provided with the standard profiles:
  - Height 12, 15, 20, 25 or 30 mm,
  - Width 5 or 10 mm

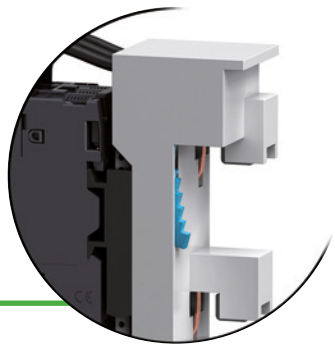

DB400244.eps

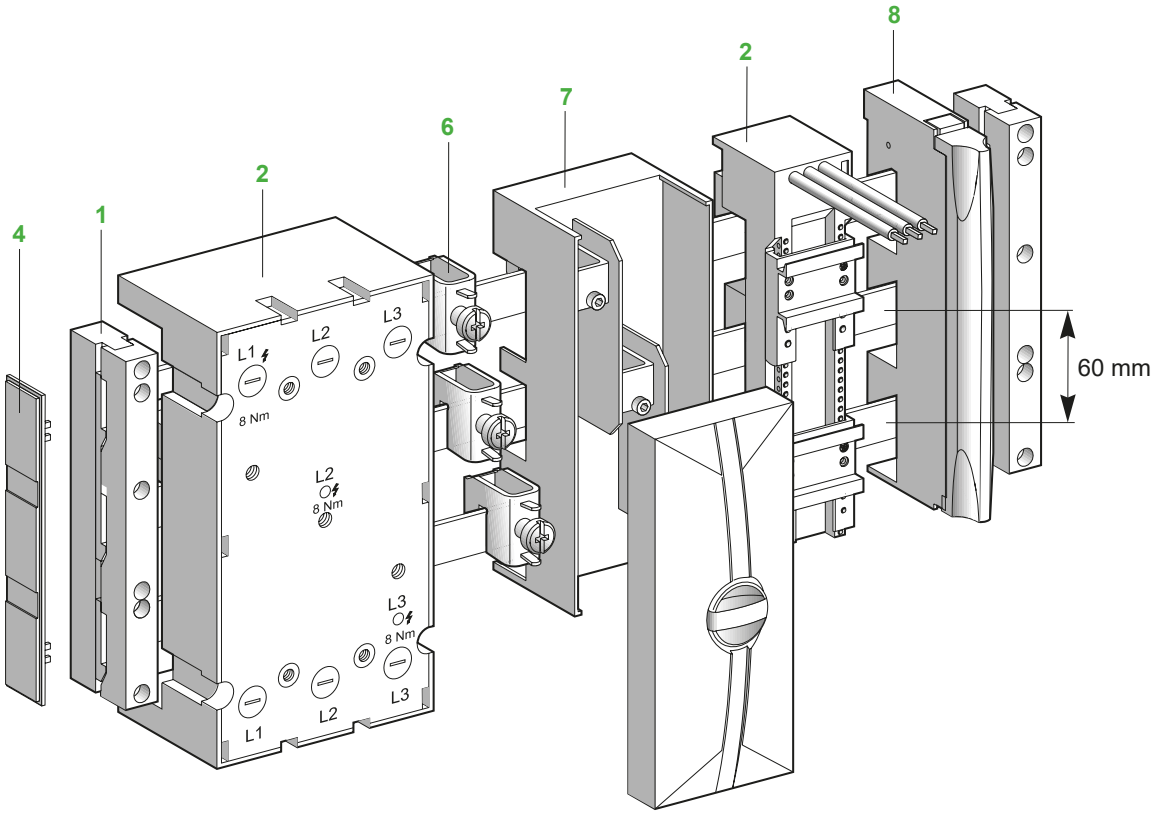

DB400245.eps

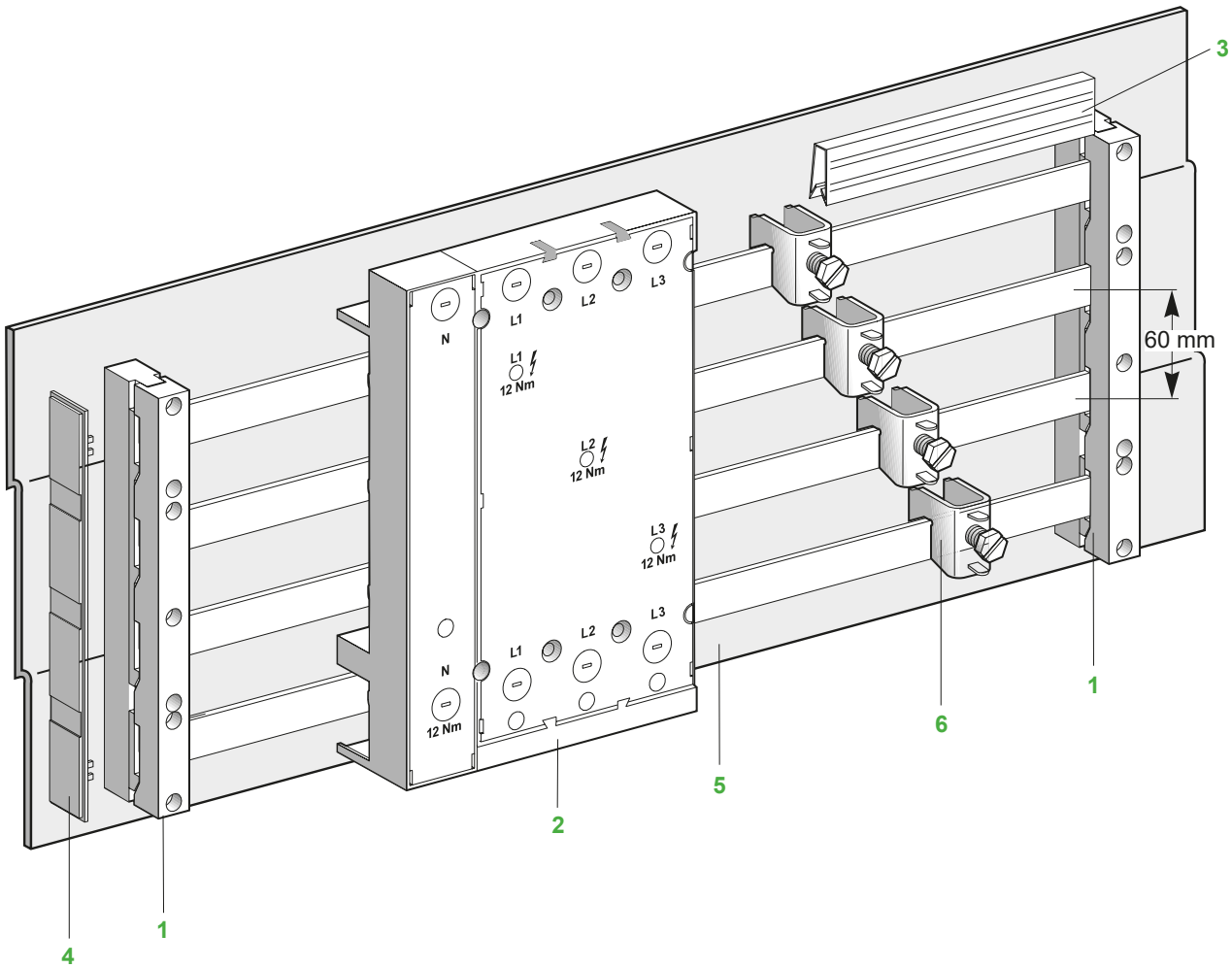

Life Is On Schneider Electric

Introduction

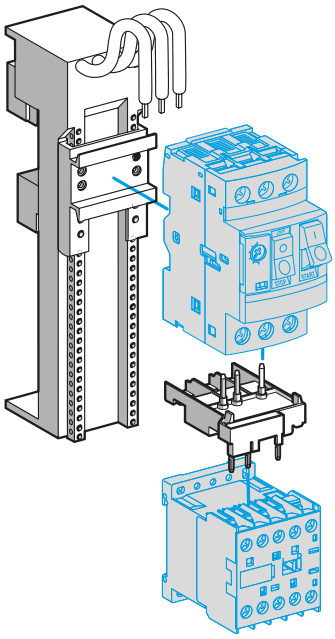

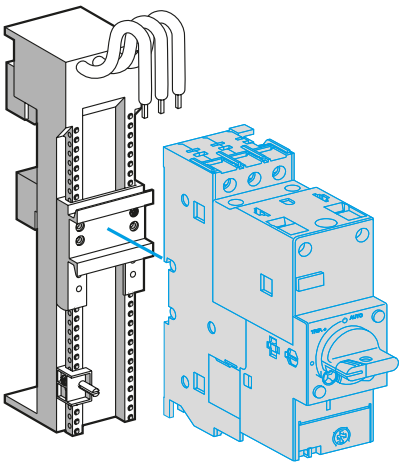

Installation examples.

Description

The mounting plate system for busbars simplifies the installation of motor feeder components used in your electrical installations.
Power distribution is performed by a busbar.

The mounting plates are fitted directly on this busbar, by snap-on mounting, thus implementing mechanical and electrical connection.

This system offers numerous benefits:
- space saving in cabinets
- fast, safe and reliable electrical and mechanical connection
- easy connection
- protection for users against electric shocks by direct contacts (IP20) by using busbars end covers
- equipment flexibility and modularity
- increased equipment availability: easier maintenance
- power supply without drilling (connectors) from 1.5 to 120 mm^2.

Busbars system
The busbar interaxis is 60 mm. Depending on the cross section of the bars, the busbar can withstand a maximum current of 630 A.

Note: *The bars forming the busbar are not part of the LA9Z offer. They are not supplied by us. Their selection depends on the maximum current needed for your installation (see next page).*

Support for 3P and 4P busbar (1)
These are available in 2 versions: three-pole and four-pole.
For applications having to comply with the UL standard, use the LA9ZX01508 support (3P only).

The mounting plates (2)
These allow mounting of the power feeder components consisting of:
- a Deca Frame 2 (GV2) motor circuit breaker, mounted alone or in conjunction with a TeSys K or Deca contactor
- a Deca Frame 3 (GV3) motor circuit breaker, mounted alone or in conjunction with a Deca contactor
- a Ultra motor starter
- a Deca Frame 5 (GV5) motor circuit breaker
- an Integral motor starter
- a NSX100-250 or NSX400-630 A circuit breaker
- H/J/L PowerPact circuit breaker frame.

Accessories
Accessories complete the offer:
- covers (3) for 5 and 10 mm bars
- end covers (4)
- a base plate (5)
- 1P connectors (6)
- 3P connectors on mounting plate (7)
- a spring terminal 3P connection module (8).

References:
pages B1/6 to B1/9
Characteristics:
page B1/18
Curves:
page B1/19

Product references

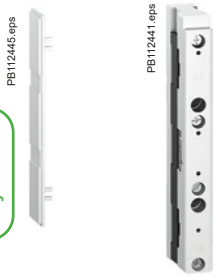

LA9ZX01573 *LA9ZX01495*

IEC busbar supports and accessories

		Min. order qty	Unit reference
3-pole	For 12, 15, 20, 25, 30 x 5/10 mm busbars	10	**LA9ZX01495**
	End covers for 3-pole busbar support	10	**LA9ZX01573**
4-pole	For 12, 15, 20, 25, 30 x 5/10 mm busbars	10	**LA9ZX01485**
	End covers for 4-pole busbar support (5 left, 5 right)	10	**LA9ZX01131**



LA9ZX01131 *LA9ZX01485*

UL busbar supports and accessories

		Min. order qty	Unit reference
3-pole	For 12, 20, 30 x 5/10 mm busbars	10	**LA9ZX01508**
	Base plate 240 x 700	2	**LA9ZX01515**
	End covers for busbar support	10	**LA9ZX01573**

Other accessories

		Min. order qty	Unit reference
Covers, length 1 m			
	For 12-30 x 5 mm busbars	10	**LA9ZX01244**
	For 12-30 x 10 mm busbars	10	**LA9ZX01245**



LA9ZX01573 *LA9ZX01508*



LA9ZX01244

Product references



LA9ZA32627

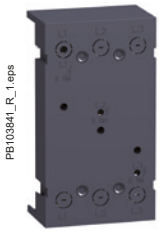

LV429372

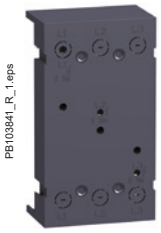

LA9ZA32600



LV432624

For Integral motor starter

Operating current AC-3 440 V	Protection by contactor-circuit breaker	Mounting plate l x h x d	Min. order qty	Unit reference
Mounting plate, 1-way				
63 A	LD1, LD4LD●	108 x 260 x 63	1	**LA9ZA32627**

For Deca Frame 5 (GV5), Frame 6 (GV6) motor circuit breakers

Ratings			Mounting plate l x h x d	Min. order qty	Unit reference
150-220 A	GV5	Mounting plate for 3P circuit breakers	104 x 190 x 63	1	**LV429372**
		Mounting plate for 4P circuit breakers	139 x 251 x 63	1	**LV429373**
320-500 A	GV6	Mounting plate for 3P circuit breakers	139 x 270 x 63	1	**LV432623**
		Mounting plate for 4P circuit breakers	184 x 284 x 63	1	**LV432624**

For PowerPact 3P circuit breakers

Ratings		Mounting plate l x h x d	Min. order qty	Unit reference
60-100-150 A	Mounting plate for H frame circuit breakers	104 x 190 x 63	1	**LA9ZA32600**
250 A	Mounting plate for J frame circuit breakers	104 x 190 x 63	1	**LV429372**
250-400-600 A	Mounting plate for L frame circuit breakers	139 x 270 x 63	1	**LV432623**

Characteristics of busbar mounting plates

Type of mounting plate		LA9ZA32621 LA9ZA32622	LA9ZA32427 LA9ZA32428 LA9ZA32434 LA9ZA32623 LA9ZA32442 LA9ZA32443	LA9ZA32624 LA9ZA32625 LA9ZA32626 LA9ZA32627	LV429372 LV429373	LV432623 LV432624	LA9ZA32600
Degree of protection as per IEC 60529	IP	20					
Rated insulation voltage	V	690					
Permissible current	A	25	32	63	80-100-250	400-630	60-100-150
Peak rated current	kA	50	50 (1)	50	50	50	50
SCCR (UL) with Compact NSX circuit breaker protection	mm²	The reinforced breaking capacity due to cascading in circuit breaker combination is maintained					
Conductor cross section (color: black)	mm²	4	6	10	NA		
	AWG	12	10	8	NA		
Type of conductor insulating material	PVC	105°			NA		

(1) 35 kA with LUB12 for LA9ZA32427 and LA9ZA32428.

Power busbar systems

Product references

PB112418_R_1.eps



LA9ZA32443, LA9ZA32621

PB112417_R_1.eps



LA9ZA32434, LA9ZA32442

PB112420_R_1.eps



LA9ZA32622

PB112421_R_1.eps



LA9ZA32623

PB112416_R_1.eps



LA9ZA32427

PB112419_R_1.eps



LA9ZA32428

PB112422_R_1.eps



LA9ZA32624

PB112423_R_1.eps



LA9ZA32625

PB112426_R_1.eps



LA9ZA32626

For Deca Frame 2 (GV2) motor circuit breakers

Operating current AC-3 440 V	Protection by motor circuit breaker	For contactor	Mounting plate l x h x d	Min. order qty	Unit reference
Mounting plate, 1-way					
25 A	GV2ME GV2P GV2LE	LC1D LC1K LP4K06-K12	45 x 200 x 63	4	**LA9ZA32621**
32 A	GV2LE		63 x 200 x 63	4	**LA9ZA32443**
Mounting plate, 2-way (3)					
25 A	GV2ME GV2P GV2LE	LC1D LC1K LP4K06-K12	90 x 200 x 63	2	**LA9ZA32622**
32 A	GV2ME GV2P GV2LE	LC1D	45 x 200 x 63	4	**LA9ZA32434**
			54 x 200 x 63	4	**LA9ZA32442**
			90 x 200 x 63	2	**LA9ZA32623**

Ultra motor starters

Operating current AC-3 440 V	Protection by power base		Mounting plate l x h x d	Min. order qty	Unit reference
Mounting plate, 1-way					
32 A	LUB12, LUB32		45 x 200 x 63	4	**LA9ZA32427**
Mounting plate, 2-way					
32 A	LUB12, LUB32		45 x 260 x 63	4	**LA9ZA32428**

For Deca Frame 3 (GV3) motor circuit breakers

Operating current AC-3 440 V	Protection by power base	For contactor	Mounting plate l x h x d	Min. order qty	Unit reference
Mounting plate, 1-way (1)					
63 A	GV3P	–	54 x 200 x 63	4	**LA9ZA32624**
	GV3P	LC1D40A…65 A	54 x 260 x 63	4	**LA9ZA32625**
Mounting plate, 2-way (1) (2)					
63 A	GV3P	LC2D40A…65 A	117 x 260 x 63	4	**LA9ZA32626**

(1) Contactor-circuit breaker combination without additional part.
(2) Use the LAD9R3 kit for the execution of changeover contactors.
(3) Use the LAD9R1 or LAD9R1V kit for the execution of changeover contactors.

***Note:** the mounting plate rails can be shifted vertically in 1.25 mm increments.*

Product references



LA9ZX01285



LA9ZX01287

Terminals

	I max		Set of	Unit reference
One-pole for flat bars, 5 mm	270 A	Capacity 4-35 mm²	50	**LA9ZX01285**
	400 A	Capacity 16-70 mm²	25	**LA9ZX01287**
3P cover, width 84 mm			10	**LA9ZX01413**



LA9ZX01413



LA9ZX01243

Terminals on mounting plate

	I max		Min. order qty	Unit reference
3P, on mounting plate + cover, for 12 x 5 to 30 x 10 busbars, width 81 mm	440 A	Capacity 35-120 mm²	1	**LA9ZX01243**
3P, on mounting plate + cover, for 20 x 5 to 30 x 10 busbars, width 135 mm	560 A	Capacity 120-300 mm²	1	**LA9ZX01754**



LA9ZX01563

Connection module

	I max		Min. order qty	Unit reference
3P, spring terminal connection + cover, for 12 x 5 to 30 x 10 busbars, width 20 mm	80 A	Capacity 1.5-16 mm²	8	**LA9ZX01563**

Connection by connectors

		LA9ZX01285		LA9ZX01287		LA9ZX01243		LA9ZX01563		LA9ZX01754	
		Min.	Max.	Min.	Max.	Min.	Max.	Min.	Max.	Min.	Max.
Flexible wire	mm²	4	35	16	70	35	120	1.5	16	120	300
Multi-strand wire	mm²	4	35	16	70	35	120	1.5	16	120	300
Rigid wire	mm²	4	35	–	–	–	–	1.5	16	-	-
Tightening torque	N.m	... x 5		... x 5		... x 5-10		... x 5-10		... x 5-10	
Cover		LA9ZX01413		LA9ZX01413		Supplied without cover		Supplied without cover		Supplied without cover	

Introduction: page B1/5
Characteristics: page B1/18
Curves: page B1/19

Hot-plug distribution: when continuity of service is required

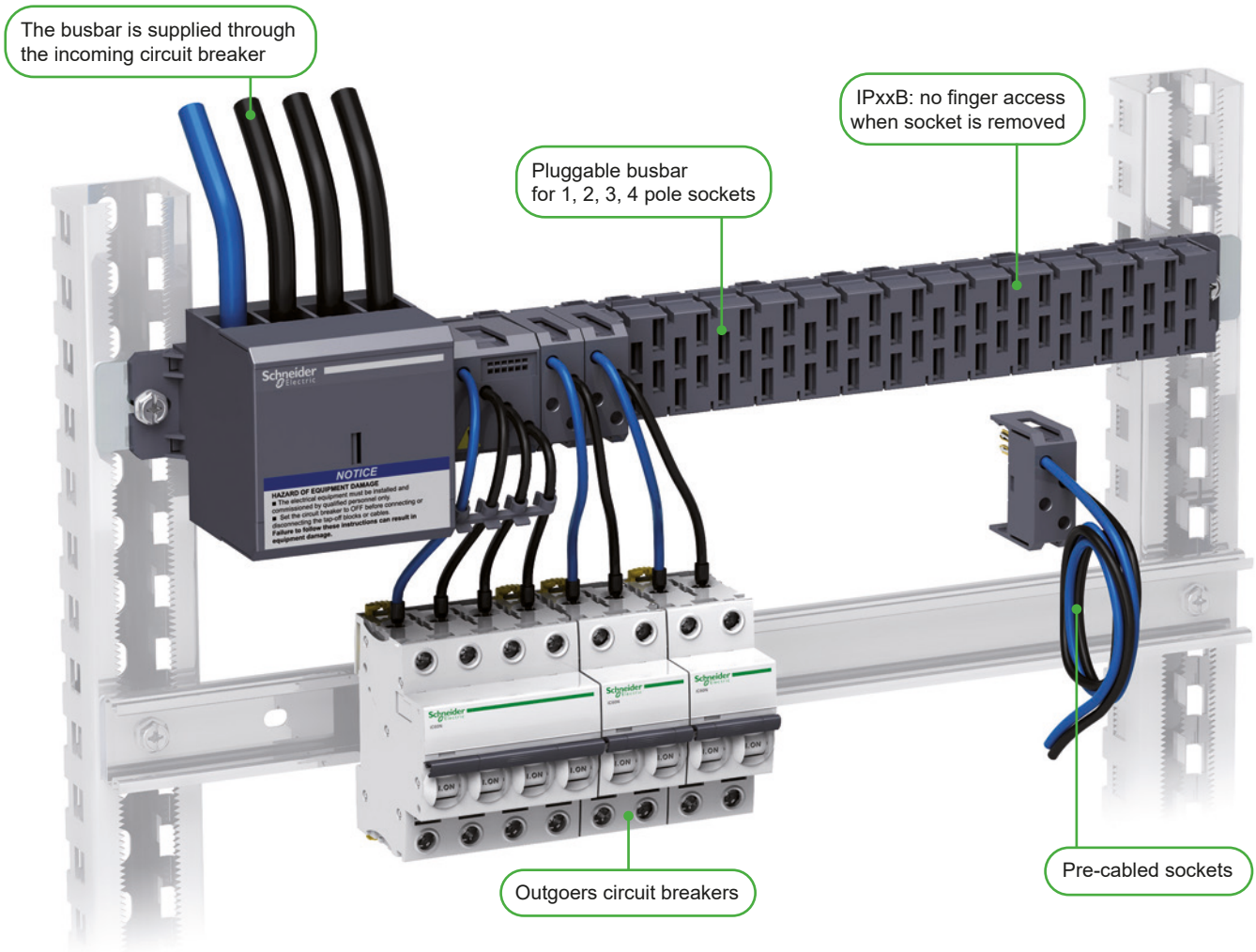

Advantages

- Considerable time saving: stand alone busbar, fixed to the chassis with 2 screws
- Preserved continuity of service during modification: live connection, disconnection (off load)
- Wide adaptability: 6 busbar lengths from 344 to 1100 mm, 12 models of sockets
- Multi standard: conform to IEC and UL standards

Detailed view: pre cabled socket

- The assembling process and the technological choices ensure a long-lasting reliability
- Each wire is welded on a spring clip providing robustness to the socket and vibration resistant contacts



Introduction

When compactness and continuity of service are required

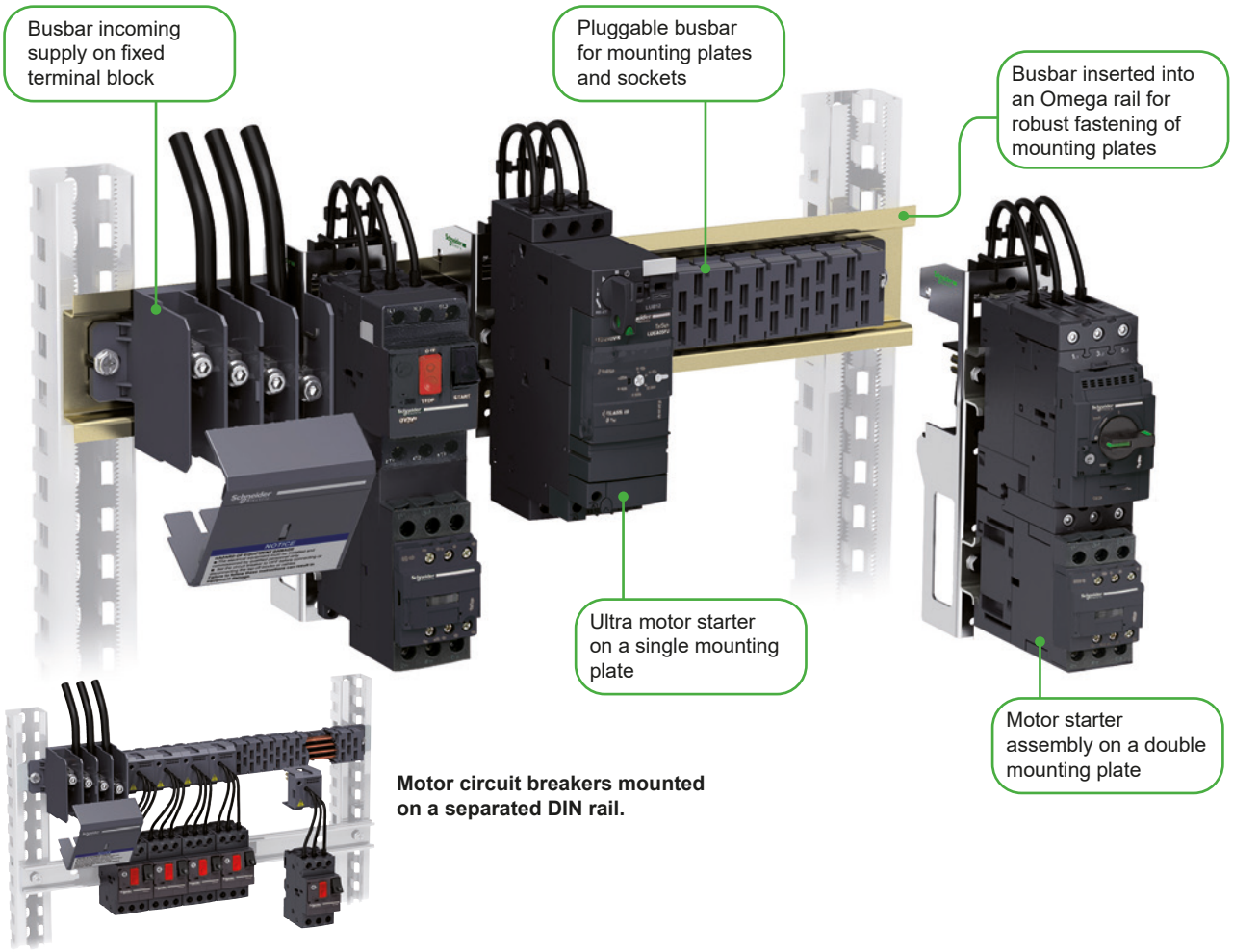

Motor circuit breakers mounted on a separated DIN rail.

Advantages

- Space saving in compact enclosures: the total volume is reduced to that of the motor starter assemblies
- Preserved continuity of service during modification and maintenance: live connection, disconnection (off load)
- Wide adaptability: 6 busbar lengths from 344 to 1100 mm, 12 models of sockets, 23 mounting plates for motor starters up to 25 or 50 A
- Multi standard: conform to IEC and UL standards

Detailed view: mounting plate back face

- Thanks to the plug and its pre-cabled wires the motor starter is safely assembled in the workshop, for immediate or later use.
- A piece of DIN profile rail is attached on the front face of the mounting plate for fastening the components.
- The metal mounting plate ensures a rigid and robust fastening on the omega rail.

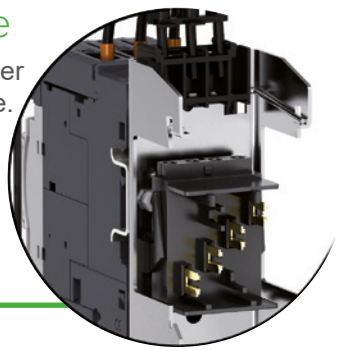

DB404140.eps

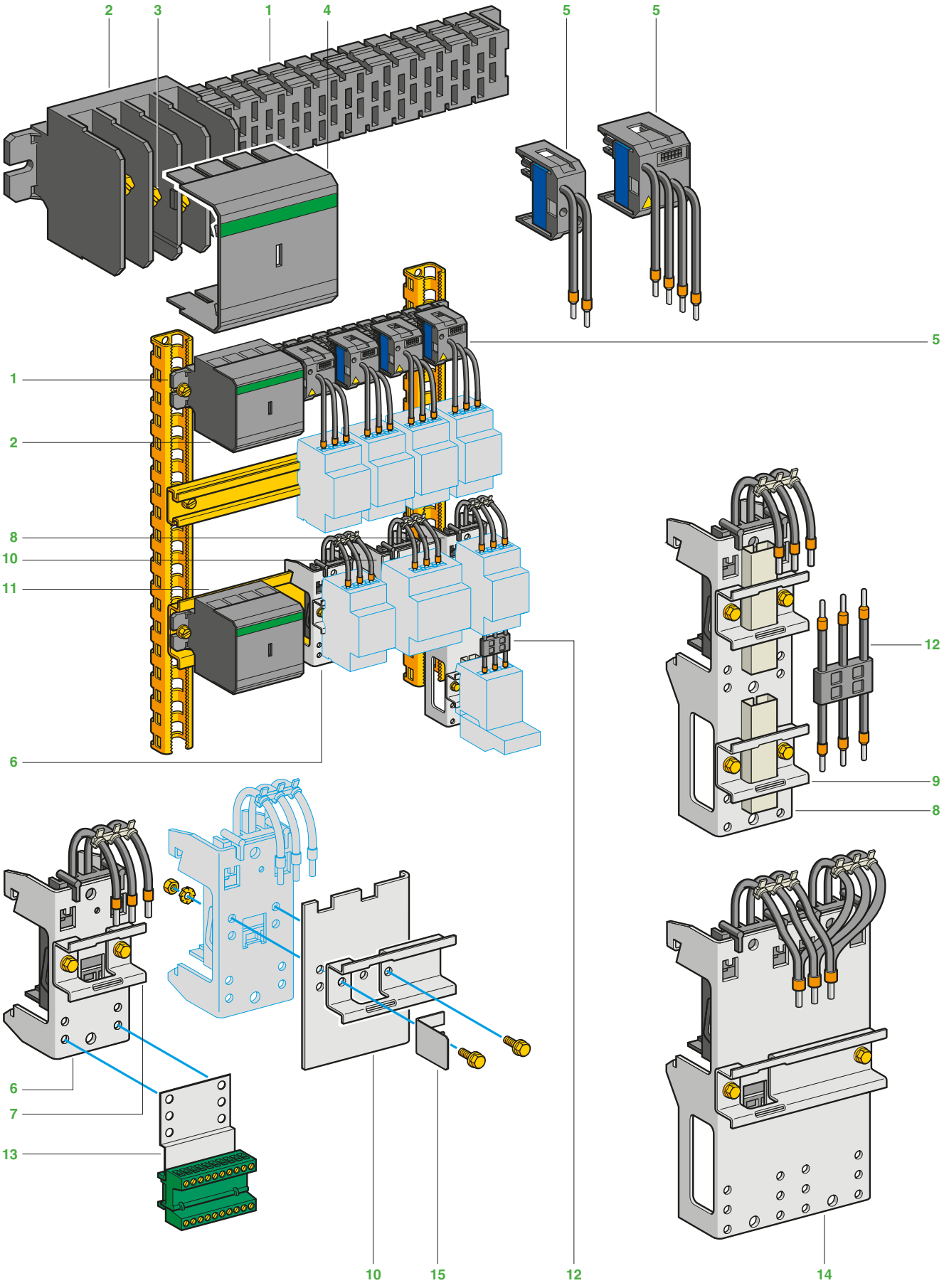

Life Is On Schneider Electric

Introduction

The assembly of automated control and distribution panels requires the use of products that are not only safe but also simple and quick to mount and cable.

The Linergy HK pre-assembled busbar system meets all these criteria by incorporating prefabricated components which cater for 3 principal functions:

Carrying of electric current

By the pre-assembled 4-pole busbar system **1**, 160 A at 35 °C.

4-pole busbars can be used for 3-phase + Neutral or 3-phase + Common.

The busbars are available in 6 lengths: 344, 452, 560, 668, 992, 1100 mm.

An incoming supply terminal block **2** is located at the extreme left of the busbar.

"Knock-out" partitions allow connection of the power supply from above or below to connectors **3** which are protected by a removable cover **4**.
Upstream protection of the busbar is shown on page B1/20.

Current distribution

Tap-off units **5** (factory assembled) are available in 4 versions:
- 2-pole,
- 3-pole,
- 4-pole (3-phase + Neutral),
- 4-pole (3-phase + Common).

The tap-offs clip onto the busbar with instantaneous mechanical and electrical connection to the busbars.
2 ratings are available: 16 and 32 A.
The tap-off units ensure not only rapid mounting, but also a neat appearance for the power distribution system and complete safety when accessing under live circuit conditions.

Component mounting

Component mounting plates with incorporated tap-off allow mounting of and supply of power to components.
They are available in 25 A or 50 A ratings.

These mounting plates clip onto the mounting rail **11**, which also supports the busbar, and at the same time make electrical connection via the incorporated tap-off.

2 types of mounting plate are available:
- single plates **6** (height 105 mm), with bolt-on 35 mm wide ⎓ rail **7**, which may be bolted on in one of two positions, allowing height adjustment of 10 mm.
- double plates **8** and **14** (height 190 mm), with two bolt-on, 35 mm wide ⎓ rails **9** mounted on 100 mm fixing centres; each rail may be bolted on in one of 4 positions, allowing height adjustment in 10 mm steps. These plates are supplied with connectors **12** to allow wiring between control and protection devices.

Single mounting plates enable the following types of distribution:
- 2-pole (Ph + N) and (Ph + Ph)
- 3-pole,
- 4-pole (3 Ph + N or 3 Ph + common).

Double mounting plates enable the following types of distribution: 2-pole (Ph + N, Ph + Ph), 3-pole or 4-pole (3Ph+N and 3Ph + common).

Extension plates **10** can be bolted onto single and double mounting plates to enable mounting of wider components. Using a side stop **15** in conjunction with these extension plates also supports the Linergy HK busbar when used vertically.

A control terminal block **13** comprising a support plate bolted onto the single or double mounting plates and a 10-pole plug-in block, enables connection of the control circuit wires (c.s.a. 1.5 mm^2 max).

References:
pages B1/14 to B1/16
Characteristics:
pages B1/20 and B1/21
Dimensions:
pages B1/22 and B1/23

Product references

PB112406_R.eps



AK5JB1●●

Busbars

The busbars can be screw-mounted onto any type of support. However. if it is to be used in conjunction with component mounting plates incorporating a tap-off, it is essential that it is mounted on the AM1DL201 rail.
When mounting tap-offs, the rated operational current of the busbar should be taken into account: 160 A at 35 °C.

Number of conductors	Number of tap-offs at 18 mm intervals	Length	Suitable for mounting in enclosure width	Reference	Weight
		mm	mm		kg
4 (1)	12	344	600	**AK5JB143**	0.700
	18	452	800	**AK5JB144**	0.900
	24	560	800	**AK5JB145**	1.100
	30	668	800	**AK5JB146**	1.300
	48	992	1200	**AK5JB149**	1.900
	54	1100	1200	**AK5JB1410**	2.100

PB112411_R.eps



AK5PC12

PB112412_R.eps



AK5PC14

Removable power sockets

Use	Number of points used on the busbar system		Thermal current	Cable lengths	Min. order qty	Unit reference
		Width	A	mm		
Single-phase + Neutral	1	9 mm	16	200	6 (2)	**AK5PC12**
			32	1000	6 (2)	**AK5PC32L**
2-phase	1		16	200	6 (3)	**AK5PC12PH**
			32	1000	6 (3)	**AK5PC32LPH**
3-phase	2	18 mm	16	200	6	**AK5PC13**
			32	250	6	**AK5PC33**
				1000	6	**AK5PC33L**
3-phase + Neutral	2		16	200	6	**AK5PC14**
			32	250	6	**AK5PC34**
				1000	6	**AK5PC34L**
3-phase + common	2		16 10 (common)	200	6	**AK5PC131**
			32 10 (common)	250	6	**AK5PC331**

PB112405.eps



AK5GF1

Accessories

Description	Maximum no. of connections	C.s.a. mm²	Sold in lots of	Unit reference
Cable guide	4	2.5 or 4	20	**AK5GF1**

(1) 4-pole: 3-phase + Neutral or 3-phase + Common.
(2) Total of 6 sockets supplied: 2 sockets (N + L1), 2 sockets (N + L2). 2 sockets (N + L3).
(3) Total of 6 sockets supplied: 2 sockets (L1 + L2), 2 sockets (L1 + L3). 2 sockets (L2 + L3).
(4) Cut and drill to suit use.

Product references

PB112407_R.eps



AK5PA241

PB112408_R.eps



AK5PA242

PB500804_R.eps



AM1DL201

Component mounting plates incorporating tap-off

Single plate (height 105 mm)

Use	No. of 18 mm points used on the busbar system	Phase	Thermal currentA	Number of ⊔ rails for com-ponent support	Min. order qty	Reference
Single-phase + neutral	3 (54 mm width)	Ph1+N	25	1	1	**AK5PA211N1**
		Ph2+N	25	1	1	**AK5PA211N2**
		Ph3+N	25	1	1	**AK5PA211N3**
2-phase	3	Ph1+Ph2	25	1	1	**AK5PA211PH12**
		Ph1+Ph3	25	1	1	**AK5PA211PH13**
		Ph2+Ph3	25	1	1	**AK5PA211PH23**
3-phase	3	–	25	1	1	**AK5PA231**
3-phase + common	3	–	25	1	1	**AK5PA2311**
3-phase + neutral	3	–	25	1	1	**AK5PA241**

Double plate (height 190 mm)

Prefabricated 25 A connectors are supplied for connecting the 2 protection and control devices.

Single-phase + neutral	3	Ph1+N	25	2	1	**AK5PA212N1**
		Ph2+N	25	2	1	**AK5PA212N2**
		Ph3+N	25	2	1	**AK5PA212N3**
2-phase	3	Ph1+Ph2	25	2	1	**AK5PA212PH12**
		Ph1+Ph3	25	2	1	**AK5PA212PH13**
		Ph2+Ph3	25	2	1	**AK5PA212PH23**
3-phase	3	–	25	2	1	**AK5PA232**
	6 (108 mm width)	–	25	2	1	**AK5PA232S**
			50	1	1	**AK5PA532**
3-phase + neutral	3	–	25	2	1	**AK5PA242**
3-phase + common	3	–	25 (10 common)	2	1	**AK5PA2312**
	6	–	25 (10 common)	2	1	**AK5PA2312S**
			50 (10 common)	1	1	**AK5PA5312**
3-phase + neutral	6	–	50	1	1	**AK5PA542**

Omega rail, width 75 mm

This rail is designed to accommodate the busbar system when it is used with Linergy HK mounting plates incorporating tap-offs. It supportsthe busbar system. The plates simply clip onto the rail.

Material and surface treatment	Depth	Length	Min. order qty	Reference	Weight
	mm	mm			kg
2 mm sheet steel	15	2000 (4)	6	**AM1DL201**	3.000

Power busbar systems

Product references



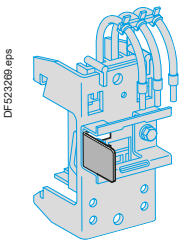

AK5BT01



AK5SB1



AB1R4

Extension plates

These plates bolt onto the equipment support plates, after having removed them from the rails, to be able to mount wider components.

Use		Number of tap-offs at 18 mm intervals	Reference
For mounting plates incorporating tap-off	Single	4	**AK5PE17**
	Double	4	**AK5PE27**

Side stop (AK5JB mounted vertically)

Use	Set of	Reference
For extension plate (for AK5PA●●●)	50	**AK5BT01**

Control terminal blocks

Description	Thermal current A	Set of	Reference
10-pole terminal blocks, for screwing onto plate AK5 PA●●●			
	10	10	**AK5SB1**

Accessories

Description	Marking	Set of	Reference
Strips of clip-in markers 10 identical numbers, signs or capital letters per strip	0…9	25	**AB1R●** (1)
	+	25	**AB1R12**
	–	25	**AB1R13**
	A…Z	25	**AB1G●** (1)

*(1) Replace the ● in the selected reference with the number or letter required. Example: **AB1R1** or **AB1GA.***

Note:
- *if the equipment is wider than the mounting plate, an extension plate can be used to increase the width of the support plate.*
- *for upstream protection, see page B1/20.*

Linergy BZ, HK

Technical Data for Designers

Contents

Linergy BZ:
> characteristics B1/18
> curves B1/19
Linergy HK:
> characteristics ..... B1/20 and B1/21
> dimensions ..... B1/22 and B1/23

Characteristics

PB112441.eps



LA9ZX01495

PB112440.eps



LA9ZX01485

PB112442.eps



LA9ZX01508

General characteristics

		LA9ZX01495 and LA9ZX01485 (IEC 6.439-1)							
Bar dimensions compatibility	mm	12 x 5	15 x 5	20 x 5	25 x 5	30 x 5	12 x 10	20 x 10	30 x 10
Max. rated operating current	A	200	250	320	400	450	360	520	630
Min. peak permissible rated current	kA	30	30	30	30	45	35	35	53
Distance max. between 2 busbars supports	mm	570	570	570	570	570	570	570	570
Degree of protection	IP	20 (with cover LA9ZX01244 or LA9ZX01245)							
Thermal resistance	°C	125							
Rated current frequency	Hz	50/60							
Rated insulation voltage	V	690							
Rated operating voltage	V	690							
		LA9ZX01508 (UL) 508 A							
Bar dimensions compatibility	mm	12 x 5	20 x 5	30 x 5	12 x 10	20 x 10	30 x 10		
Rated operating current	A	150	362	500	300	564	630		
I_{eff} (RMS) surge current	kA	18	18	22 - 25	18	18	22 - 25		
SCCR (protected by Compact NSX circuit breaker) 250 A 480 V AC	kA	65	-	-	65	-	-		
SCCR (protected by Compact NSX circuit breaker) 250 A 600 V AC	kA	25	-	-	25	-	-		
SCCR (protected by Compact NSX circuit breaker) 400 A 480 V AC	kA	-	65	65	-	65	65		
SCCR (protected by Compact NSX circuit breaker) 400 A 600 V AC	kA	-	35	35	-	35	35		
SCCR (protected by Compact NSX circuit breaker) 500 A 480 V AC	kA	-	-	65	-	-	65		
SCCR (protected by Compact NSX circuit breaker) 600 A 600 V AC	kA	-	-	35	-	-			
SCCR (protected by Compact NSX circuit breaker) 600 A 480 V AC	kA	-	-	50	-	-	50		
SCCR (protected by Compact NSX circuit breaker) 600 A 600 V AC	kA	-	-	25	-	-	25		
SCCR (protected by fuses Class J or T ...) 400 A 480 V AC	kA	100	100	100	100	100	100		
SCCR (protected by fuses Class J or T ...) 500 A 480 V AC	kA	-	-	100	-	-	100		
SCCR (protected by fuses Class J or T ...) 500 A 600 V AC	kA	-	-	100	-	-	100		
Distance max. between 2 busbars supports (busbar protected)	mm	400	800	800	400	800	800		
Degree of protection	IP	20 (with cover LA9ZX01244 or LA9ZX01245)							
Thermal resistance	°C	125							
Rated current frequency	Hz	50/60							
Rated operating voltage	V	600							

Curves

Determining the spacing between busbar supports (LA9ZX01495 and LA9ZX01485), according to IEC 61439-1 (1)

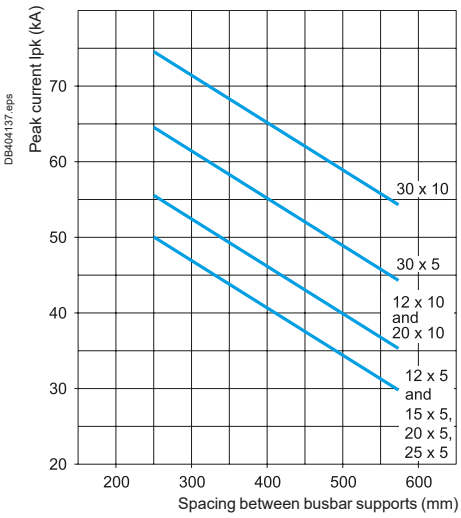

Short-circuit strength diagram according to UL845 (LA9ZX01508)

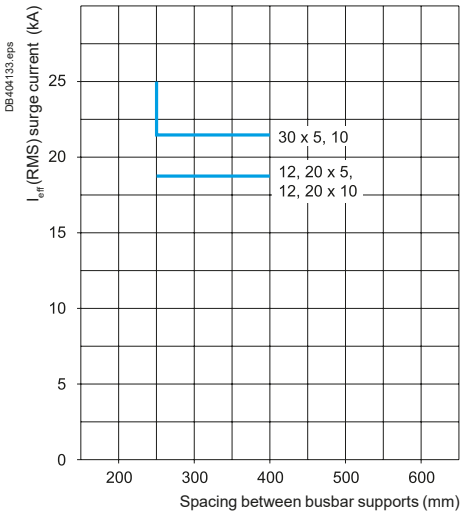

(1) Depending on the short-circuit current.

Load resistance of busbar assemblies in IEC applications

For an ambient temperature of 35 °C and a busbar temperature of 65 °C

Cross section	mm²	12 x 5	15 x 5	20 x 5	25 x 5	30 x 5	12 x 10	20 x 10	30 x 10
Permissible current	**A**	200	250	320	400	450	360	520	630

In the event of changes in climatic conditions, the following curve indicates the correction factor K_2 to be applied.

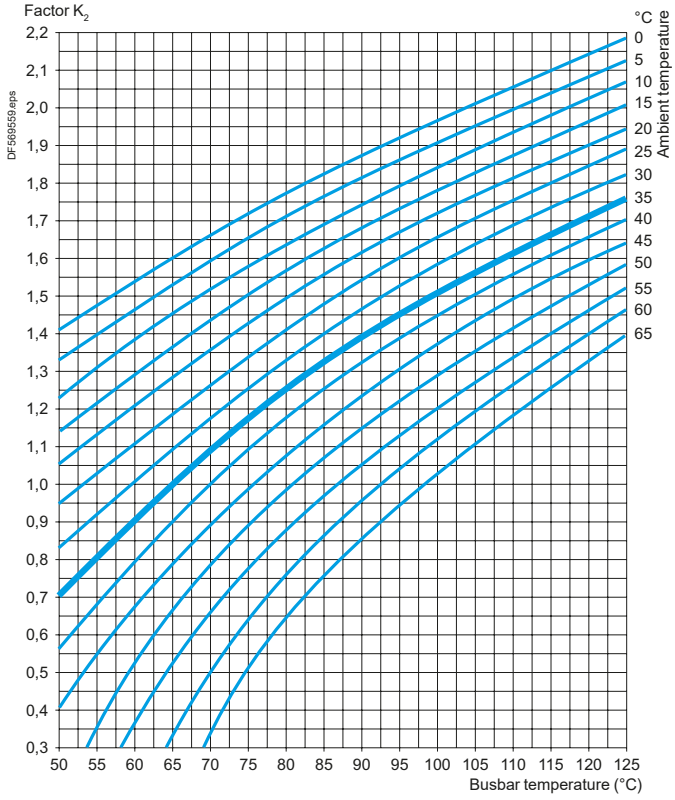

Example: In normal operating conditions, a tinned busbar of 30 x 10 can permanently withstand 630 A.

For a load of 800 A, the correction factor K_2 to be applied will be 1.3 ($\frac{800\ A}{630\ A}$). As a result, the temperature rise in the busbars will reach 82.5 °C.

Introduction: page B1/5
References: pages B1/6 to B1/9
Characteristics: page B1/18

Characteristics

Busbar system characteristics

Conforming to standards			IEC 60439					
Product certifications			UL, CSA, DNV, LROS					
Degree of protection	Against access to live parts		IP XXB conforming to IEC 60529					
Flame resistance	Conforming to IEC 60695	**°C**	850 (incandescent wire)					
	Conforming to standard UL 94		V0					
Number of conductors	AK5JB14●		4					
Supply current			~					
Rated operational frequency		**Hz**	50 or 60					
Rated operational current	Ambient temperature 35 °C	**A**	160					
	Coefficient K to be applied according to the ambient temperature	**°C**	35	40	45	50	55	60
		K	1	0.96	0.92	0.88	0.83	0.78
Rated insulation voltage	Conforming to IEC 60439-1	**V**	690					
	Conforming to UL and CSA	**V**	600					
Operational voltage			Off-load plugging-in and unplugging, with supply switched on					
	Conforming to IEC 60439-1	**V**	400					
	Conforming to UL, CSA	**V**	480					
			Plugging-in and unplugging, with supply switched off					
	Conforming to IEC 60439-1	**V**	690					
	Conforming to UL, CSA	**V**	600					
Maximum permissible peak current		**kA**	25					
Maximum let-through energy		**A^2s**	1 x 10^7					
Upstream short-circuit (1) and overload protection	Type of protection		Schneider Electric circuit-breaker			Fuses		
			NSX 160 N	NSX 160 H		aM	gF	
	Rating	**A**	160	160		160	160	
	Prospective short-circuit current	**kA**	36	70		100	100	
	Operational current	**A**	160	160		160	160	
Cabling			Maximum c.s.a.			Minimum c.s.a.		
	Flexible cable with cable end	**mm^2**	70			2.5		
	Solid cable	**mm^2**	70			2.5		
	Tightening torque	**Nm**	10					
Mounting position	Horizontal or vertical (2)		Fixing with screws provided					

(1) For conditions where conditional short-circuit current exceeds 25 kA.
(2) Using side stop **AK5BT01** *on mounting plates* **AK5PA**.

Introduction: page B1/13
References: pages B1/14 to B1/16
Dimensions: pages B1/22 and B1/23

Characteristics

Tap-off characteristics

Type		AK5 PC12	AK5 PC12PH	AK5 PC13	AK5 PC14	AK5 PC131	AK5 PC32L	AK5 PC32LPH	AK5 PC33 PC33L	AK5 PC34 PC34L	AK5 PC331
Conforming to standards		IEC 60439									
Product certifications		UL, LROS, CSA, DNV									
Degree of protection		Against access to live parts: IP XXB conforming to IEC 529									
Polarity		Phase + Neutral	Phase + Phase	3-phase	3-phase + Neutral	3-phase + Common	Phase + Neutral	Phase + Phase	3-phase	3-phase + Neutral	3-phase + Common
Conductor c.s.a. (UL cables)	**mm²**	2 x 2.5	2 x 2.5	3 x 2.5	4 x 2.5	3 x 2.5 1 x 1.5	2 x 4	2 x 4	3 x 4	4 x 4	3 x 4 1 x 1.5
Conductor colours		Black Blue (Neutral)	Black	Black	Black Blue (Neutral)	Black White	Black Blue (Neutral)	Black	Black	Black Blue (Neutral)	Black White (Common)
Permissible current	**A**	16	16	16	16	16 10 (Common)	32	32	32	32	32 10 (Common)
Rated insulation voltage	**V**	690 conforming to IEC 60439-1									
Rated peak current	**kA**	6									
Maximum let-through energy	**A²s**	100 000					200 000				
Type of conductor insulation		PVC 105 °C									

Tap-off characteristics

Type		AK5 PA211N1 PA211N2 PA211N3 PA212N1 PA212N2 PA212N3	AK5 PA211PH12 PA211PH13 PA211PH23 PA212PH12 PA212PH13 PA212PH23	AK5 PA231 PA232 PA232S	AK5 PA241 PA242	AK5 PA2311 PA2312 PA2312S	AK5 PA532	AK5 PA542	AK5 PA5312
Conforming to standards		IEC 60439							
Product certifications		UL, LROS, CSA, DNV							
Degree of protection		Against access to live parts: IP XXB conforming to IEC 60529							
Polarity		Phase + Neutral	Phase + Phase	3-phase	3-phase + Neutral	3-phase + Common	3-phase	3-phase + Neutral	3-phase + Common
Conductor c.s.a. (UL cables)	**mm²**	2 x 4	2 x 4	3 x 4	4 x 4	3 x 4 1 x 1.5	2 x (3 x 4)	2 x (4 x 4)	2 x (3 x 4) 1 x 1.5
Permissible current	**A**	25	25	25	25	25 10 (Common)	50	50	50 10 (Common)
Rated insulation voltage	**V**	690 conforming to IEC 60439-1							
Rated peak current	**kA**	6							
Maximum let-through energy	**A²s**	200 000							
Type of conductor insulation		PVC 105 °C							

Characteristics of mounting rails AM1DL201

Type		Omega ⌓ (width 75 mm, depth 15 mm)
Material		2 mm sheet steel
Surface treatment		Galvanized

Introduction: page B1/13
References: pages B1/14 to B1/16
Dimensions: pages B1/22 and B1/23

Dimensions

Busbars

AK5JB●●●

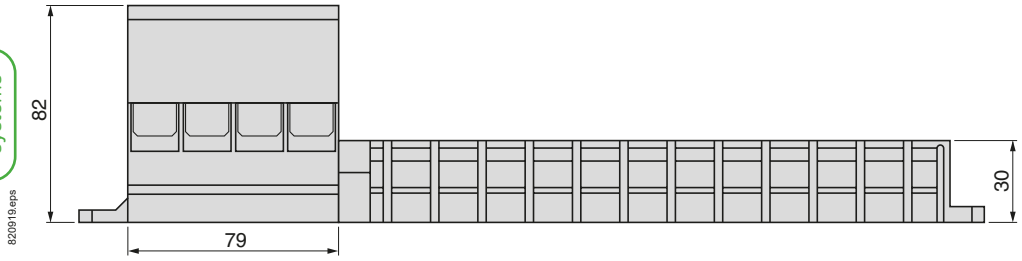

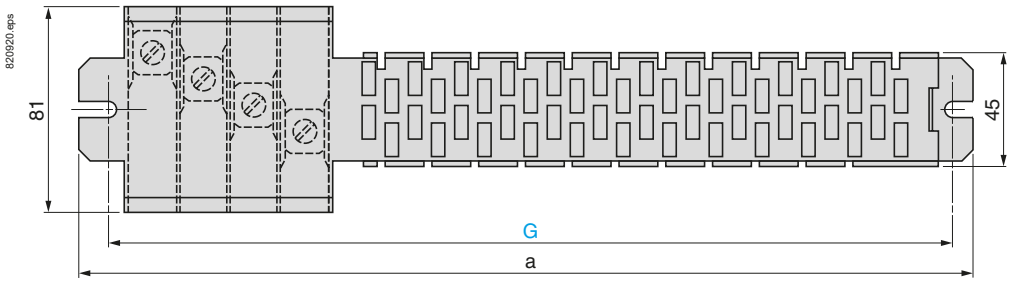

AK5	a	G	No. of 18 mm points
JB143	344	330	12
JB144	452	438	18
JB145	560	546	24
JB146	668	654	30
JB149	992	978	48
JB1410	1100	1086	54

Busbar feed units

AK5JB●●●

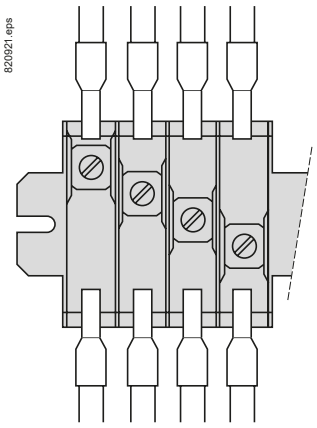

Installation of AK5JB●●● busbar systems

Connection			C.s.a. in mm² min	C.s.a. in mm² max
Flexible cable with or without cable end			1 x 2.5 2 x 2.5	1 x 70 (1) 2 x 35
Flexible bar			–	2 x (9 x 4)
Flexible bar + flexible cable with or without cable end			9 x 4 + 1 x 2.5	9 x 4 + 1 x 35

(1) Maximum c.s.a. or connection of conductor without cable end.

Removable power sockets 16 and 32 A

AK5PC12●. AK5PC32L●

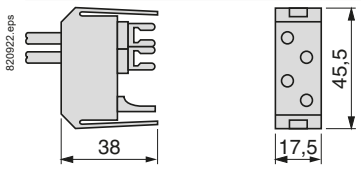

AK5PC●3. AK5PC33L
AK5PC●4. AK5PC34L
AK5PC●31

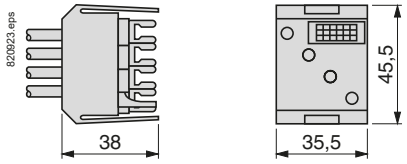

Mounting plates incorporating tap-offs, 25 A

AK5PA2●1. AK5PA2311. AK5PA211●●●●

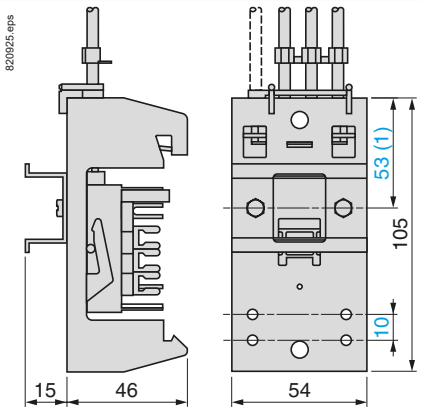

Single width extension plates

AK5PE17

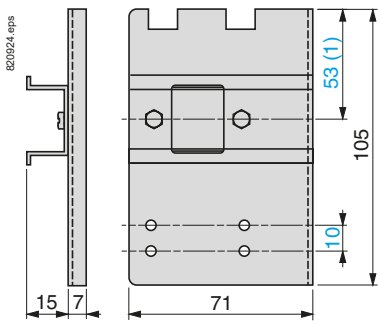

Note: *It is recommended that the power sockets or the removable plates are connected as close as possible to the busbar feed unit.*

(1) Can be fixed at 43 mm.

Introduction: page B1/13
References: pages B1/14 to B1/16
Characteristics: pages B1/20 and B1/21

Dimensions

Component mounting plates incorporating tap-off
AK5PA232. AK5PA2312. AK5PA242

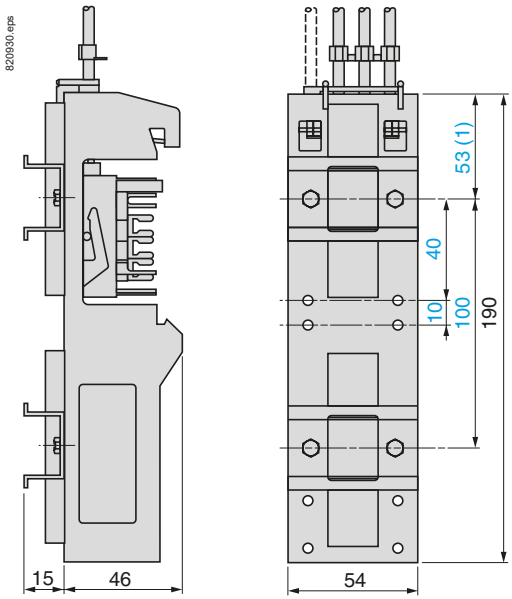

Double extension plate
AK5PE27

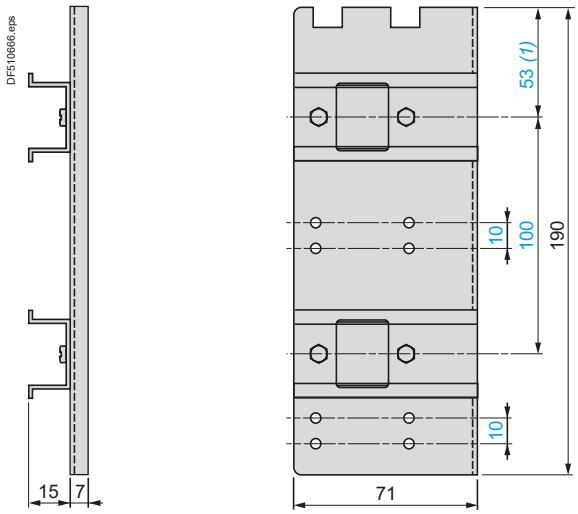

Component mounting plates incorporating tap-off
AK5PA232S. AK5PA2312S

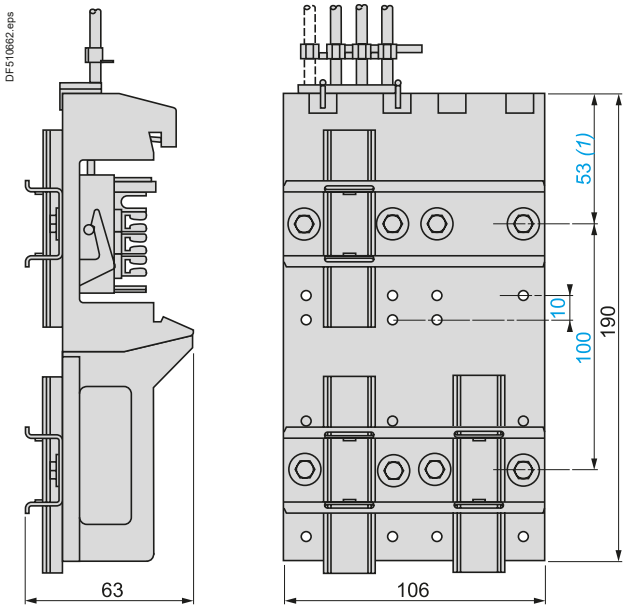

AK5PA532. AK5PA5312. AK5PA542

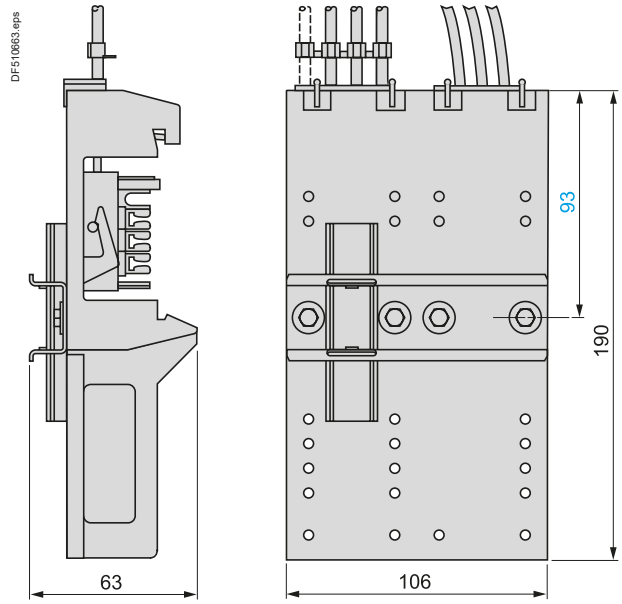

Side stop
AK5BT01

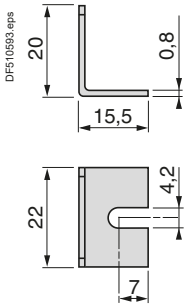

Control terminal block
AK5SB1

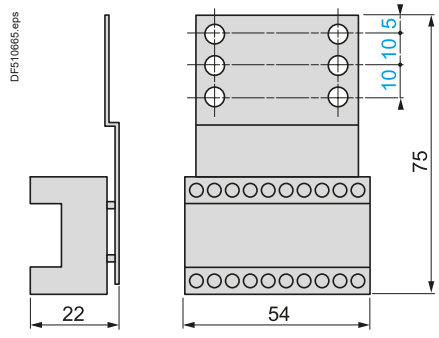

(1) Can be fixed at 43 mm.

Introduction: page B1/13
References: pages B1/14 to B1/16
Characteristics: pages B1/20 and B1/21

TeSys Control
Wiring systems for motor starters

Power wiring systems for motor starters

Type of product		Pages
Power wiring system for motor starter assemblies: screw clamp connection	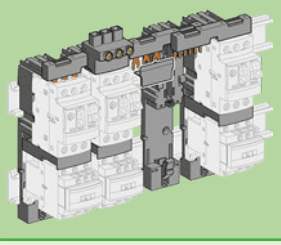	B2/2
Power wiring system for motor starter assemblies: spring terminals connection		B2/4

RJ45 Control wiring systems for motor starters

Motor starters-to-PLC Control wiring architectures Selection tables		B2/6
RJ45 connection module for Ultra motor starter Pluggable		B2/8

DB417847.eps

Group of fuse carriers directly mounted on DIN rail

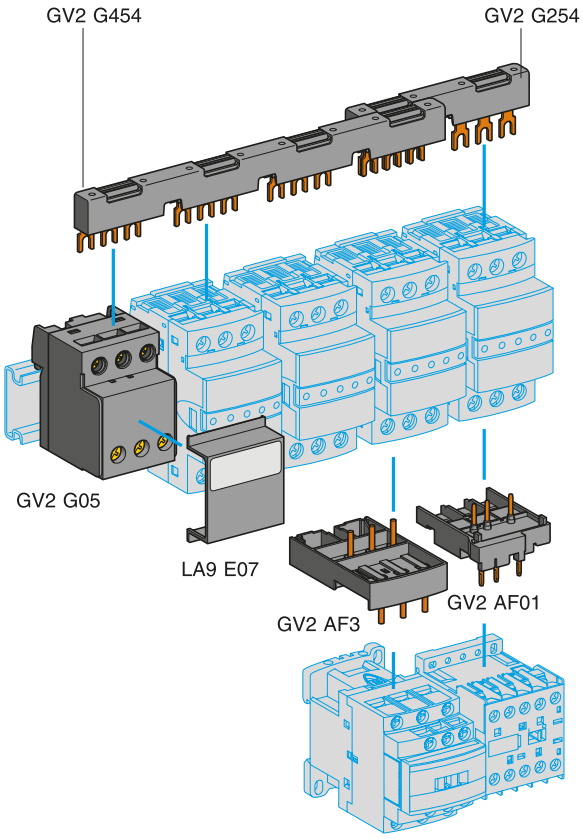

Group of fuse carriers + contactors mounted on adapter plates

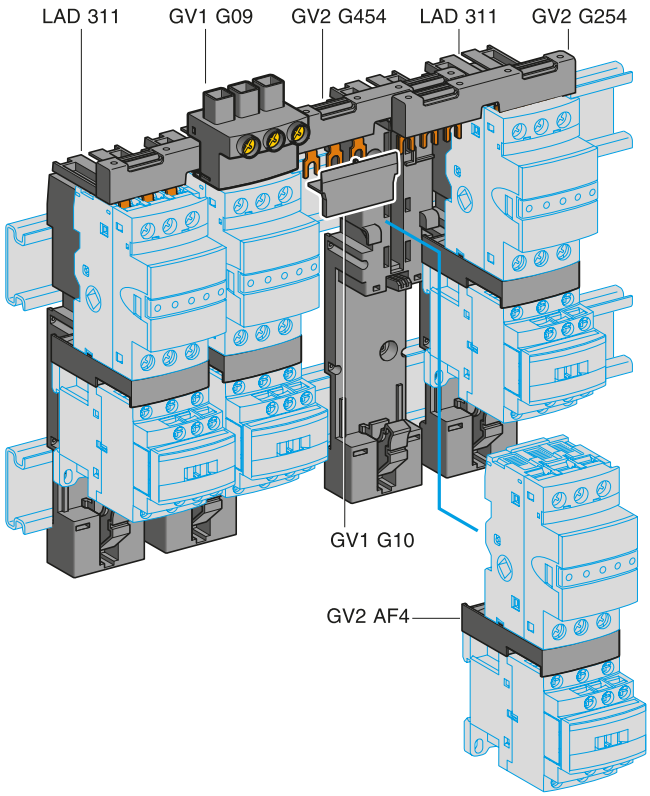

Group of circuit breakers directly mounted on DIN rail

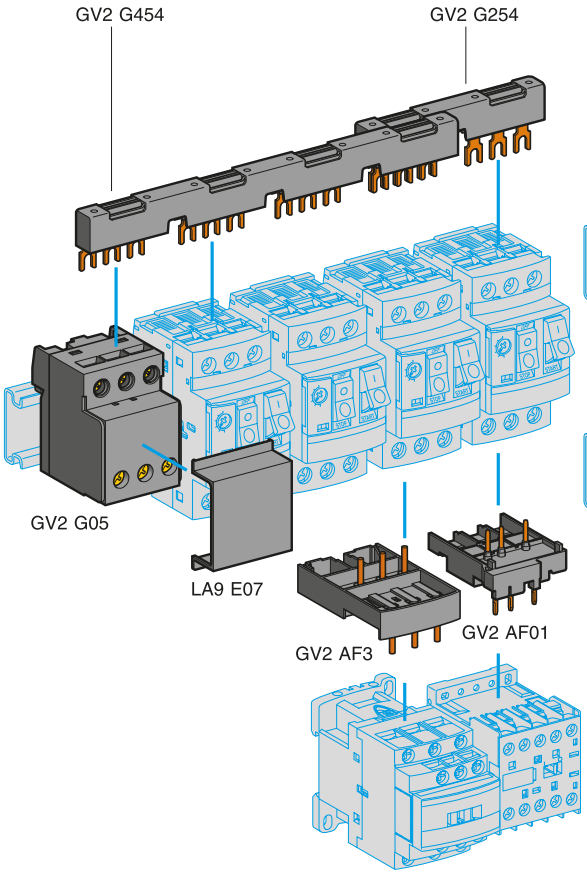

Group of circuit breakers + contactors mounted on adapter plates

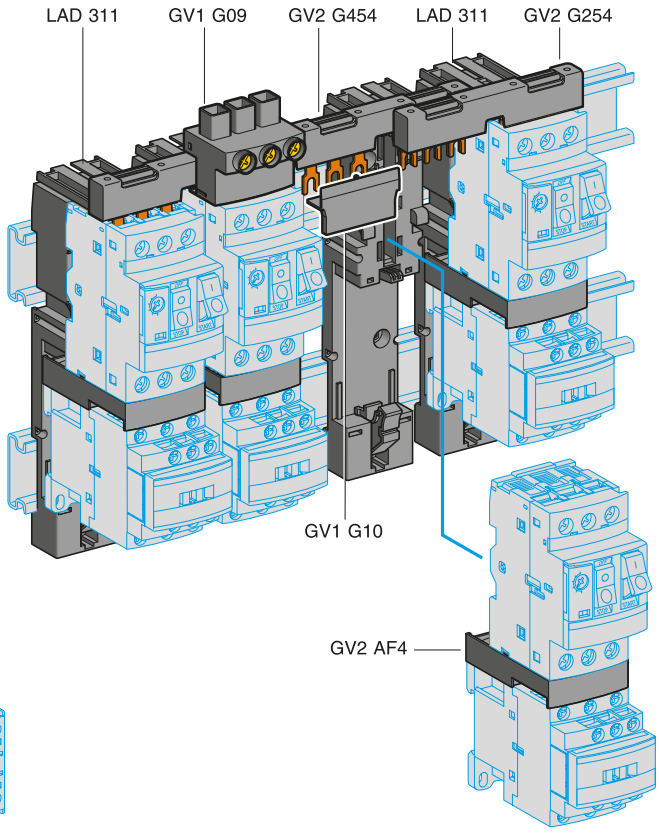

Life Is On Schneider Electric

Product references

This system is convenient when time and space savings are required.
The motor starter can be composed of:
- LS1D323 fuse carrier + Deca (LC1D) contactor
- Deca Frame 2 (GV2) circuit breaker + Deca (LC1D) contactor.

Upstream busbars and terminals

Description	Application	Pitch (mm)	Unit reference
Sets of 3-pole 63 A busbars	2 tap-offs	45	**GV2G245**
		54	**GV2G254**
		72	**GV2G272**
	3 tap-offs	45	**GV2G345**
		54	**GV2G354**
	4 tap-offs	45	**GV2G445**
		54	**GV2G454**
		72	**GV2G472**
	5 tap-offs	54	**GV2G554**
Description	**Application**	**Sold in lots of**	**Unit reference**
Terminal block for supply to one or more GV2G busbar sets	Connection from the top	1	**GV1G09**
	Can be fitted with current limiter GV1L3 (GV2ME and GV2P)	1	**GV2G05**
Cover for terminal block	For mounting in modular panels	10	**LA9E07**
Protective end cover	For unused busbar outlets	5	**GV1G10**

Assembling components

Description	Application	Sold in lots of	Unit reference
Combination blocks	Between GV2 and contactor LC1K or LP1K (1)	10	**GV2AF01**
	Between GV2 and contactor LC1D09…D38 (1)	10	**GV2AF3**
	Between GV2 mounted on LAD311 and contactor LC1D09…D38	10	**GV2AF4**
Adapter plates	For mounting a GV2ME and contactor LC1D09…D38 with front faces aligned	1	**LAD311**
Height compensation plate	7.5 mm	10	**GV1F03**

(1) Ensures both the connection and a rigid support to the contactor. No extra fixing mean required.

PB111872.eps



GV2AF02

Accessories

Description	Application	Sold in lots of	Unit reference
Adapter plates	For mounting a GV2 by screw fixing	10	**GV2AF02**
Motor starter adapter plate	For mounting a GV2 and a contactor LC1D09…D25. Item delivered with a GV1G02 flexible connection	1	**GK2AF01**
Flexible 3-pole connection for connecting a GV2 to a contactor LC1-D09…D25	Centre distance between mounting rails: 100…120 mm	10	**GV1G02**
Incoming line spacer for UL 508 Type E applications	For GV2P (except 32 A)	1	**GV2GH7**
Clip-in marker holders (supplied with each circuit breaker)	For GV2 P, GV2L, GV2LE and GV2RT (8 x 22 mm)	100	**LA9D92**

PB111907.eps



GK2AF01

PB111869.eps



GV1G02

Dimensions:
page B2/13

DB438737.eps

Group of fuse carriers + contactors mounted on adapter plates

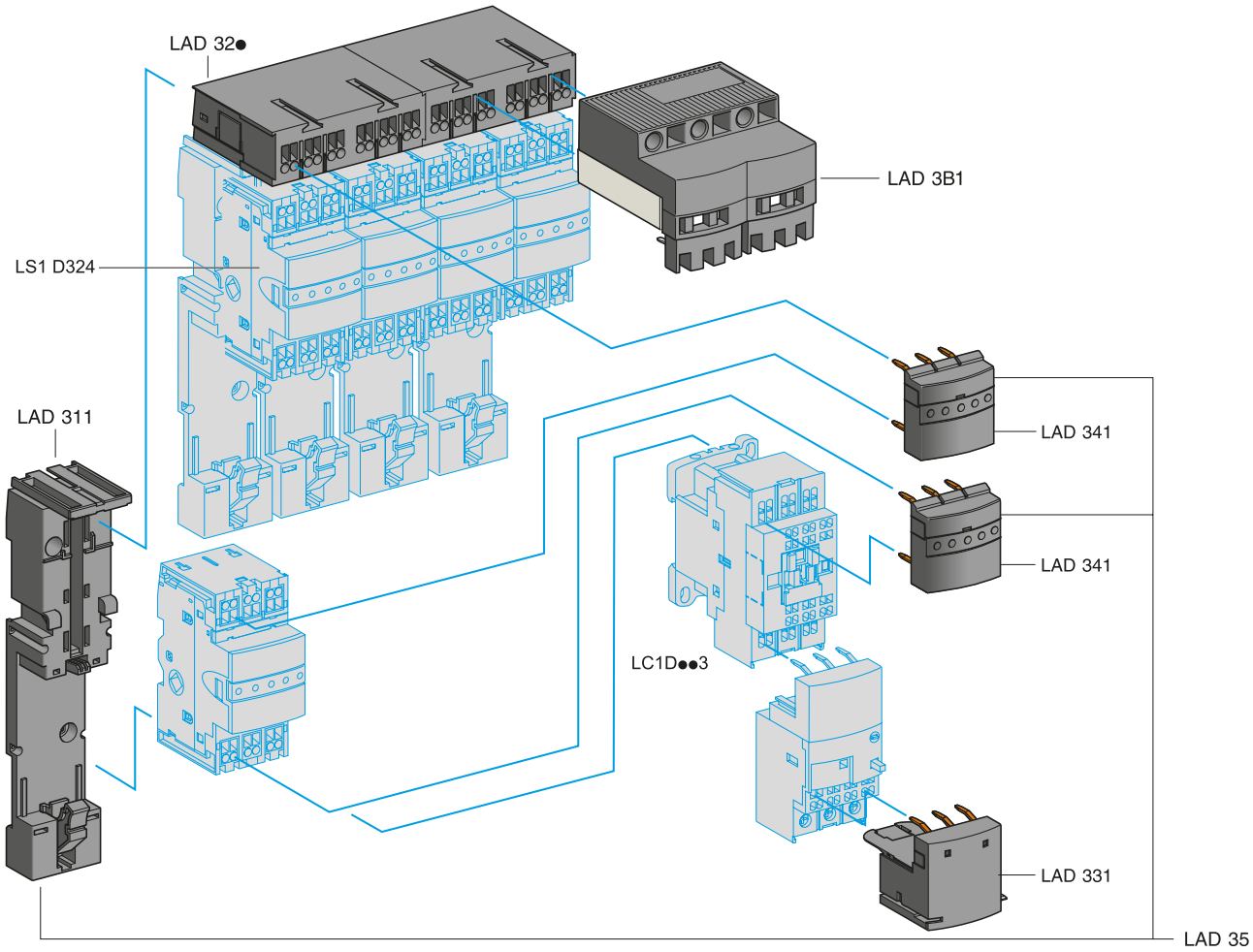

Power circuit pre-wiring components
Direct starter

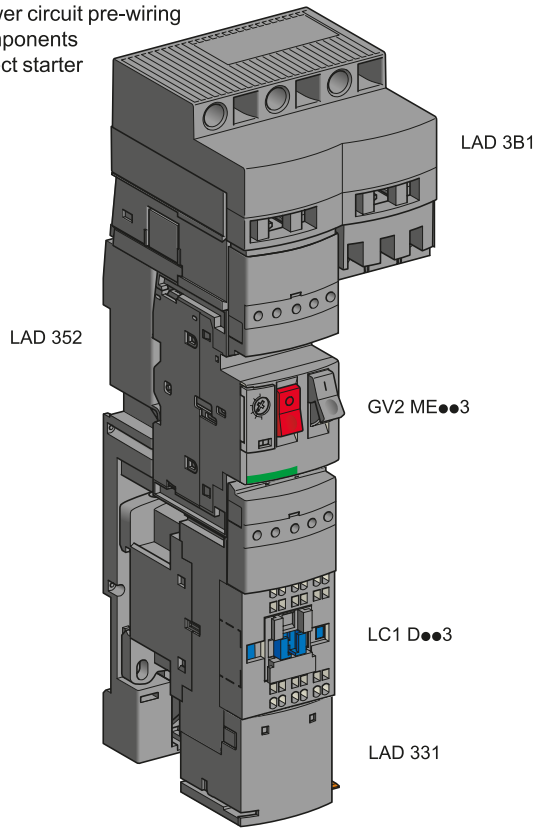

Power circuit pre-wiring components
Reversing starter

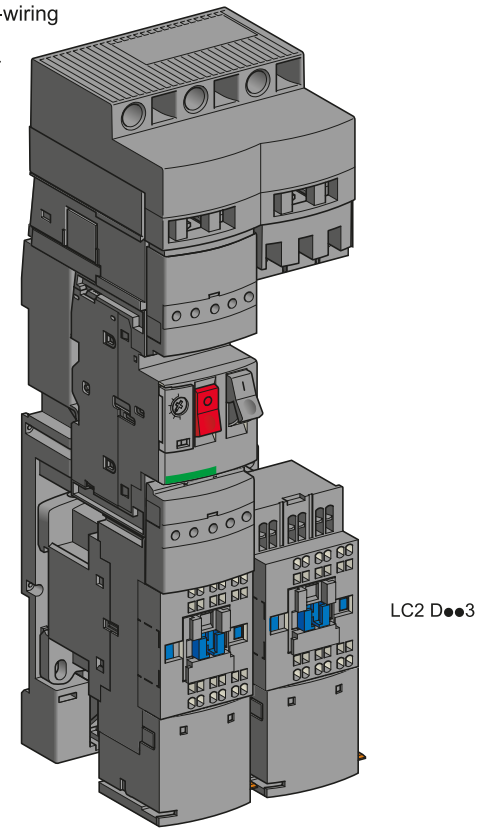

Life Is On Schneider Electric

Product references

This system is convenient when time and space savings are required.
The motor starter can be composed of:
- LS1D323 fuse carrier + Deca (LC1D) contactor.
- Deca Frame 2 (GV2) circuit breaker + Deca (LC1D) contactor

PB111855.eps



LAD3B1

PB111843.eps



LAD324

Upstream terminal and splitter blocks

Description	Maximum connection c.s.a.	Application	Sold in lots of	Reference
Upstream terminal block	16 mm² (1)	Power supply of 1 or 2 power splitter boxes	1	**LAD3B1**
Description	**Extension by**	**Number of starters**		**Reference**
Power splitter box, 60 A	LAD32●	2	1	**LAD322**
		4	1	**LAD324**

PB121279.eps



LAD311

PB114204.eps



LAD341

Assembling components

Description	Composition	Sold in lots of	Reference
Plate for mounting a GV2ME circuit breaker and a contactor	For 1 starter	10	**LAD311**
Power connection module	For 1 starter	10	**LAD341**
Power connection kit for direct starter (2)	1 plate LAD311 for GV2ME and 2 power connection modules LAD341		**LAD352**

PB121280.eps



LAD331

Downstream terminal and accessory

Description	Maximum connection c.s.a.	Application	Sold in lots of	Reference
Downstream terminal block	6 mm²	Connection of motor cables	10	**LAD331**
Cable end reducer	-	For connection of conductors from 1 to 1.5 mm²	20	**LAD99**

(1) Cables with one end pre-crimped are available to allow fast connection. References:
*1 set of 3 x 6 mm² cables (length 1 m: **LAD3B061**, length 2 m: **LAD3B062** and length 3 m: **LAD3B063**),*
*1 set of 3 x 10 mm² cables (length 1 m: **LAD3B101**, length 2 m: **LAD3B102** and length 3 m: **LAD3B103**),*
*1 set of 3 x 16 mm² cables (length 1 m: **LAD3B161**, length 2 m: **LAD3B162** and length 3 m: **LAD3B163**).*
*(2) To build a reversing starter, order 2 kits **LAD352**.*

Wiring systems

Dimensions:
page B2/12

Selection table

Product type	Connection interfaces for a group of motor starters		
IO system name	**Modicon TM3**	**Modicon Telefast**	**Modicon STB**
Architecture	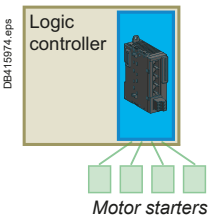	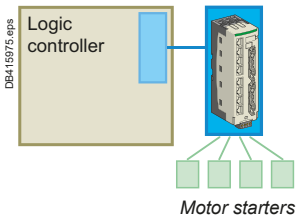	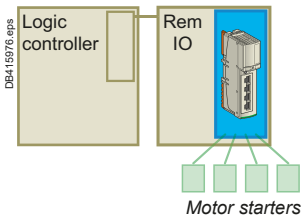
			
Application	Control of single or multiple motor-starters assemblies by mean of a logic controller. Machines or processes requiring easy, fast cabling and replacement of motor starters.		
Function	**IO module:** Ensures the direct connection of up to **4 motor starters** to logic controller (Modicon M221, M241, M251)	**Splitter box:** Ensures the connection of up to **8 motor starters** to a logic controller via Modicon Telefast multiwire cable	**IO module:** Ensures the connection of up to **4 motor starters** to a logic controller via an automation island (Modicon STB distributed IO architecture)
Upstream compatibility	With Modicon M221, M241, M251 logic controller, via logic controller internal bus	With any logic controller equipped with HE10 inputs/ outputs module	With Modicon STB automation island, via automation island internal bus
Upstream connectors	Backplane bus connector	HE10 connector	Backplane bus connector
Compatibility – **Motor circuit breaker - Type** / **Contactor - Type / Amp** / **Motor circuit breaker + Contactor - terminals**	All types of motor starters equiped with RJ45 connection system		
Motor control	Reversing / Non reversing		
Number of motor starters	**4**	**8**	**4**
Downstream connector type	RJ45		
Reference	**TM3XTYS4**	**LU9G02 / LU9G03**	**STBEPI2145K ***
Pages	Refer to Modicon M221/M241/ M251 catalogue	Ultra motor starters - pages B2/8 and A4/20	Refer to IP20 distributed IO Modicon STB catalogue

** STBEPI2145K: GV2 + contactor D09 to D32, Ultra only.*

RJ45 connection components for motor starter

Common components for Modicon TM3, Modicon Telefast, Modicon STB systems

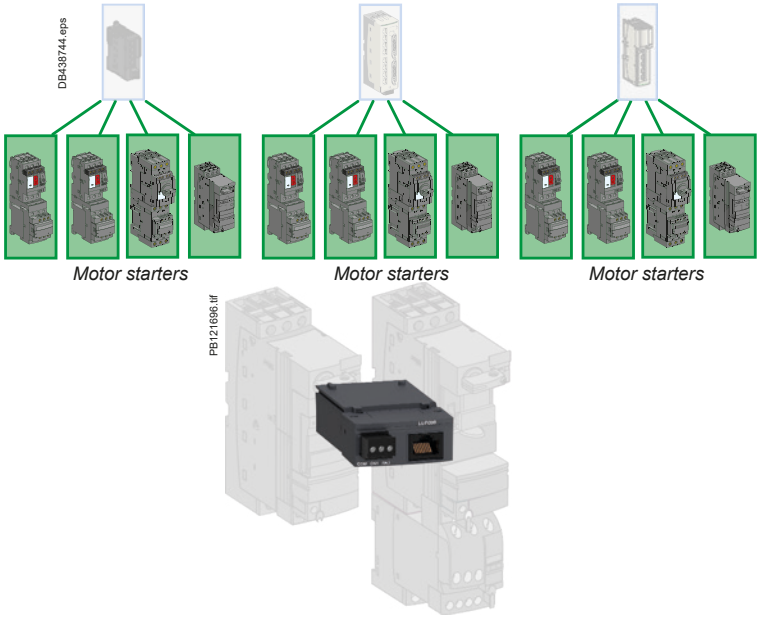

Connection module: ensures the compatibility Ultra motor starters to the RJ45 connection system
TM3XTYS4 / LU9G02 / LU9G03 / STBEPI2145K
RJ45
Ultra motor starters 12 to 38 A
Screw-clamp
Reversing or Non reversing
Plugin module
LUFC00
B2/8

Description

DB438738.eps

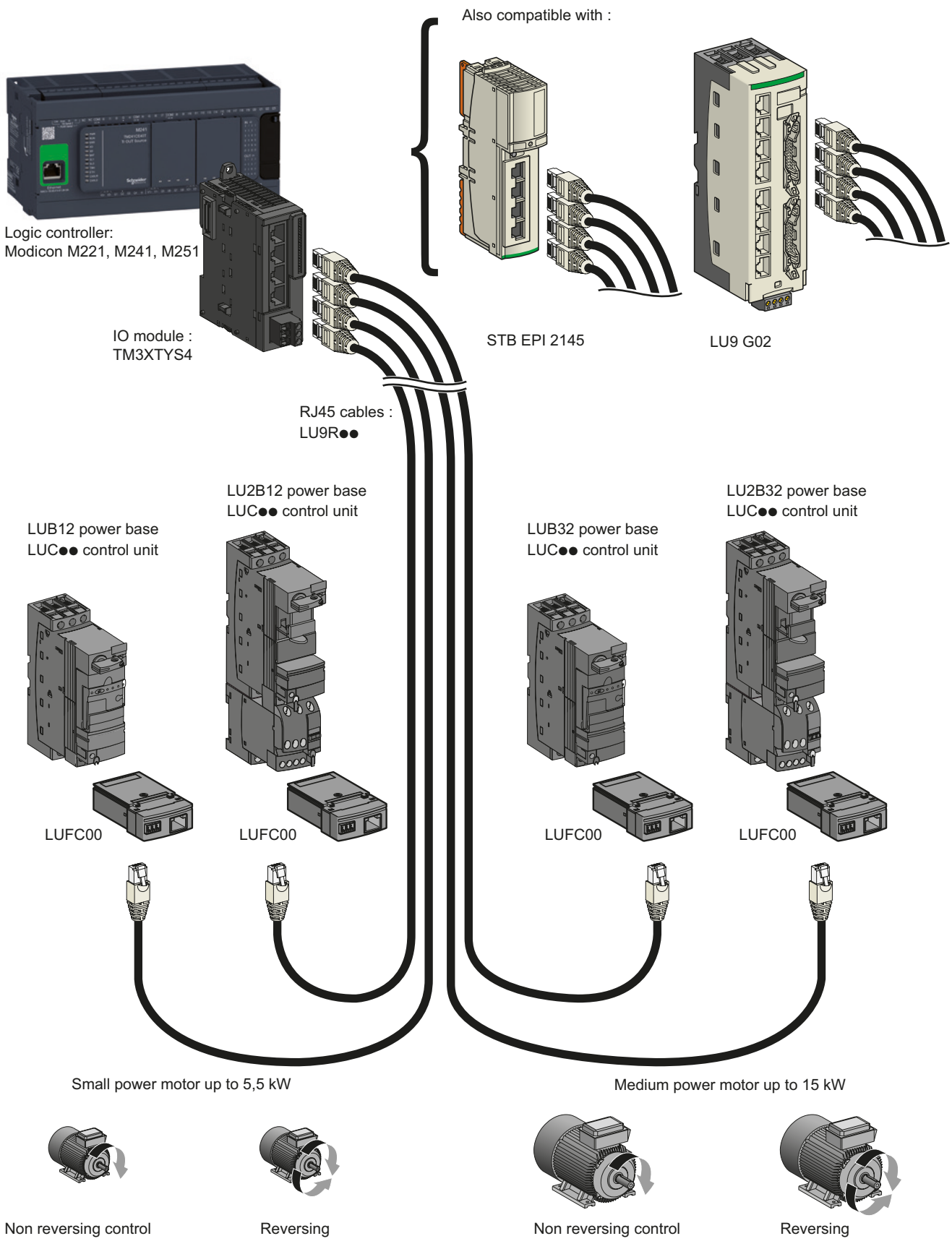

"Plug and play", for single or reversing motor starters

The LUFC00 parallel connection module provides a simple and efficient solution for control and monitoring of a Ultra direct or reverse motor starter.

Compact, fast cabling

The connection to the Ultra power base is simply achieved by insertion of the module into it. The status and control signals are carried by a simple pre-connectorized RJ45 cable (LU9R●●) between an IO module or splitter box and Ultra motor starter.

Features

■ On / OFF / Reverse control (functions non provided with LUB12, 32, 38 power bases).
■ Handle position, power contacts position monitoring (function provided with all power bases).

Compatibility

12, 32 or 38 A direct motor starters: LUB12, LUB32 or LUB38 power base + LUC●● control unit (coil code BL),
LUB120, LUB320 or LUB380 power base + LU9N11C connector + LUC●● control unit (coil code BL)

12, 32 or 38 A reversing motor starters: LU2B12, LU2B32 or LU2B38 power base + LU9MRC connector + LUC●● control unit (coil code BL).

PB121285.eps



LUFC00

PB121287.eps



LU9MRC

PB121286.eps



LU9BN11C

Ultra RJ45 connection module	
Designation	**Commercial ref**
1 Parallel wiring module	**LUFC00**

Ultra coil connector	
Designation	**Commercial ref**
2 Pre wired coil connector for LUB120, LUB320 or LUB380 power base	**LU9BN11C**
3 Pre wired coil connector for LU2B12, LU2B32 or LU2B38 power base	**LU9MRC**

Design / Installation

The LUFC00 parallel (RJ45) connection module acts as a connection interface for controlling the coil (except with LUB12, 32, 38) and the monitoring of the auxiliary contacts. As a necessary complement, a pre wired connector is needed for carrying the signal to the coil and collecting:
■ the status of the protection device (OK / Alarm) with LU9BN11C,
■ the electrical interlock contacts with LU9MRC.
As the "reversing" is higher than the "direct" power base, the LU9MRC link is longer than the LU9BN11C.

DF566964.eps

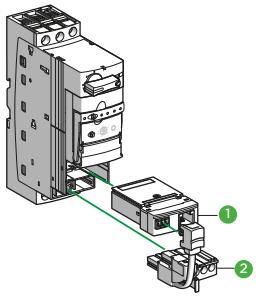

Direct motor starter (LUB120, 320, 380 power base).

DF510918.eps

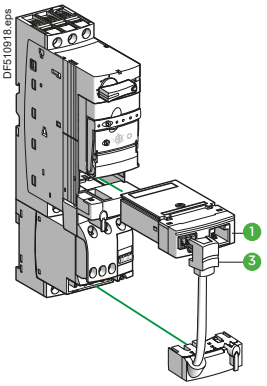

Reversing motor starter (LU2B12, 32, 38 power base).

Product references

GV1F03	GV2GH7
GV1G02	LA9D92
GV1G09	LA9E07
GV1G10	LAD311
GV2AF01	LAD322
GV2AF02	LAD324
GV2AF3	LAD331
GV2AF4	LAD341
GV2AF5	LAD351
GV2G05	LAD352
GV2G245	LAD3B1
GV2G254	LU9BMRC
GV2G272	LU9BN11C
GV2G345	LU9G02
GV2G354	LU9G03
GV2G445	LUFC00
GV2G454	STBEPI2145K
GV2G472	TM3XTYS4
GV2G554	

This document is current. Click on the product reference to get the most recent availability status (hyperlink to **se.com** product datasheet).
If your product variant is no longer available, please consult your distributor or regional sales office.

Wiring systems

Technical Data for Designers

Contents

Power wiring systems for motor starter assemblies:
> Dimensions (GV2 + LAD311 assembly).....B2/12
> Dimensions (GV2G●●● busbars) B2/13

IO module, splitter box, for motor starters control circuits
> Dimensions B2/14

Dimensions

GV2AF4 + LAD311

Combination GV2ME + Deca contactor

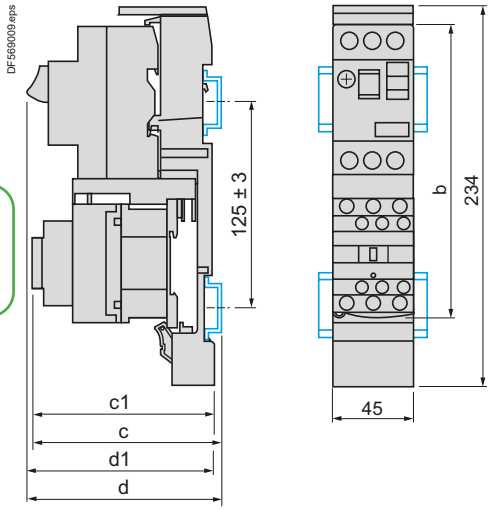

GV2ME +	LC1D09…D18	LC1D25 and D32
b	176.4	186.8
c1	103.1	136.4
c	135.6	141.9
d1	107	107
d	112.5	112.5

7.5 mm height compensation plate GV1F03



Wiring systems
Ref.

References:
page B2/5

Dimensions

Deca Frame 2 (GV2ME, GV2P, GV2L, GV2LE)

Sets of busbars GV2G445, GV2G454, GV2G472, with terminal block GV2G05

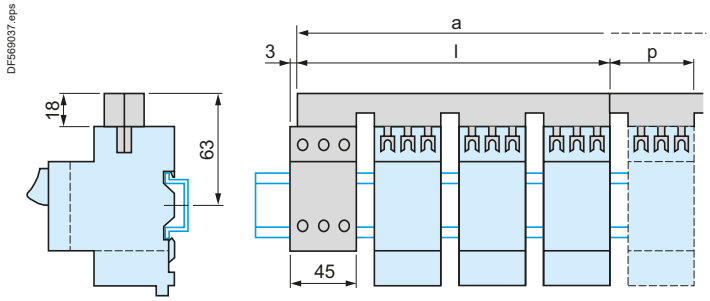

	l	p
GV2G445 (4 x 45 mm)	179	45
GV2G454 (4 x 54 mm)	206	54
GV2G472 (4 x 72 mm)	260	72

	a			
Number of tap-offs	**5**	**6**	**7**	**8**
GV2G445	224	269	314	359
GV2G454	260	314	368	422
GV2G472	332	404	476	548

Sets of busbars GV2G●●● with terminal block GV1G09

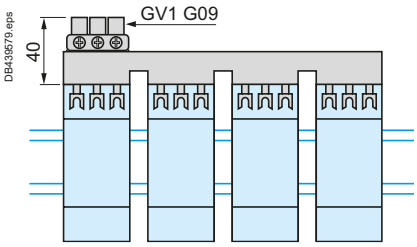

	l
GV2G245 (2 x 45 mm)	89
GV2G254 (2 x 54 mm)	98
GV2G272 (2 x 72 mm)	116

Sets of busbars GV2G245, GV2G254, GV2G272

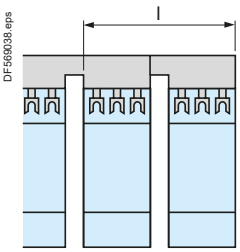

Sets of busbars GV2G554

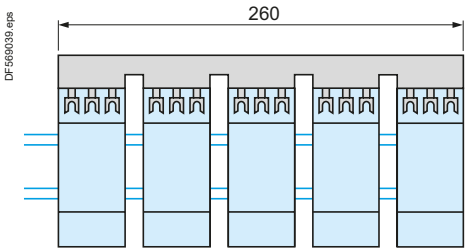

	l
GV2G345 (3 x 45 mm)	134
GV2G354 (3 x 54 mm)	152

Sets of busbars GV2G345 and GV2G354

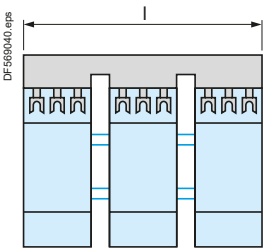

References:
page B2/3

Dimensions

Parallel RJ45 wiring modules

Splitter box LU9G02

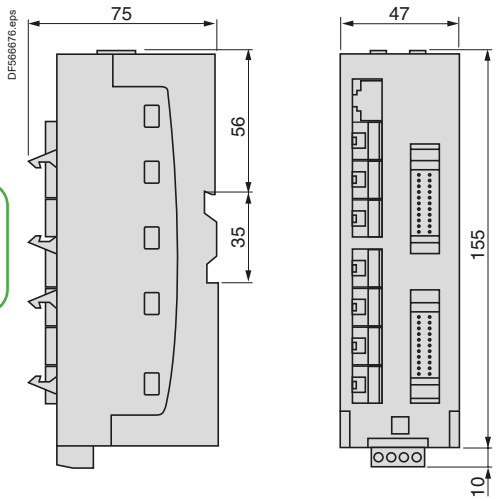

Parallel wiring module Advantys STBEPI2145

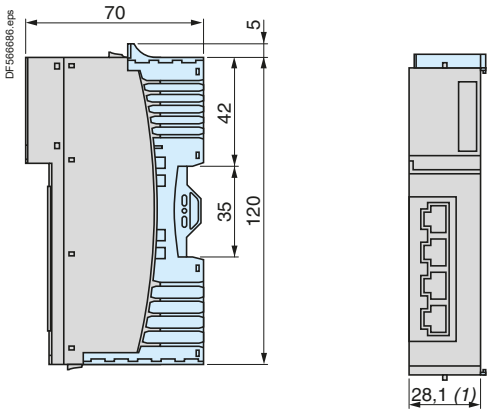

*(1) Dimension to be multiplied by the number of **STBEPI2145** modules present in the configuration.*

TeSys Control
Switch-disconnectors

Door mounting isolation switch

Type of product	Range		Pages
Switch-disconnectors	Up to 12 or 20 A		B3/2
Switch-disconnectors, high performance applications	From 12 to 175 A		B3/6
Accessories for switch-disconnectors			B3/8

Technical Data for Designers B3/17

PB121292.eps



VCDN20

PB121293.eps



VCCDN20

PB119284.eps



VBDN20

Switch-disconnectors for standard applications

- 3-pole rotary switch-disconnectors, 12 to 20 A
- Marking on operator ○ |.
- Padlockable operating handle (padlocks not supplied).
- Degree of protection IP 65.

Main and Emergency stop switch-disconnectors for door mounting

Operator			Ith	Reference
Handle	Front plate	Fixing		
	mm	mm	A	
Red, padlockable with up to 3 padlocks (Ø4 to Ø8)	Yellow 60 x 60	Ø22.5	12	**VCDN12**
			20	**VCDN20**

Main and Emergency stop switch-disconnectors for mounting at back of an enclosure (1)

Operator			Ith	Reference
Handle	Front plate	Fixing		
	mm	mm	A	
Red, padlockable with up to 3 padlocks (Ø4 to Ø8)	Yellow 60 x 60	Ø22.5	12	**VCCDN12**
			20	**VCCDN20**

Main switch-disconnectors for door mounting

Operator			Ith	Reference
Handle	Front plate	Fixing		
	mm	mm	A	
Black, padlockable with up to 3 padlocks (Ø4 to Ø8)	Black 60 x 60	Ø22.5	12	**VBDN12**
			20	**VBDN20**

(1) Switches supplied with a shaft extension **VZN17** *and a door interlock plate* **KZ32** *(see page B3/5).*

812801.tif

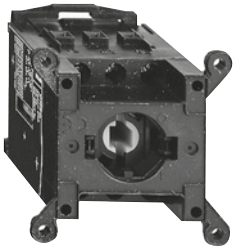

VN20

580586.tif



VZN11

580587.tif



VZN14

580588.tif

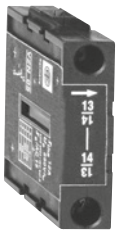

VZN05

812805.tif



VZN26

812806.tif

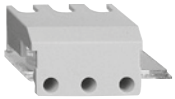

VZN08

Switch-disconnectors for standard applications

Switch bodies

Description	Rating A	Reference
3-pole switch-disconnectors	12	**VN12**
	20	**VN20**

Add-on modules

Description	Rating A	Reference
Main pole modules	12	**VZN12**
	20	**VZN20**
Neutral pole module with early make and late break contacts	12 and 20	**VZN11**
Earthing module	12 and 20	**VZN14**
Auxiliary contact block modules	1 N/O late make contact	**VZN05**
	1 N/C early break contact	**VZN06**
Input terminal protection shrouds	For add-on pole modules or auxiliary contact block modules (single-pole shroud)	**VZN26**
	For switch bodies (3-pole shroud)	**VZN08**

Maximum number of add-on modules that can be fitted on a switch body

VZN12 or VZN20	+	**VN12**	+	VZN12 or VZN20
				or
or		**or**		VZN11 + VZN14
		VN20		or
VZN05 or VZN06				VZN05 or VZN06

Characteristics: pages B3/18 to B3/21
Dimensions: pages B3/22 and B3/23
Schemes: page B3/23

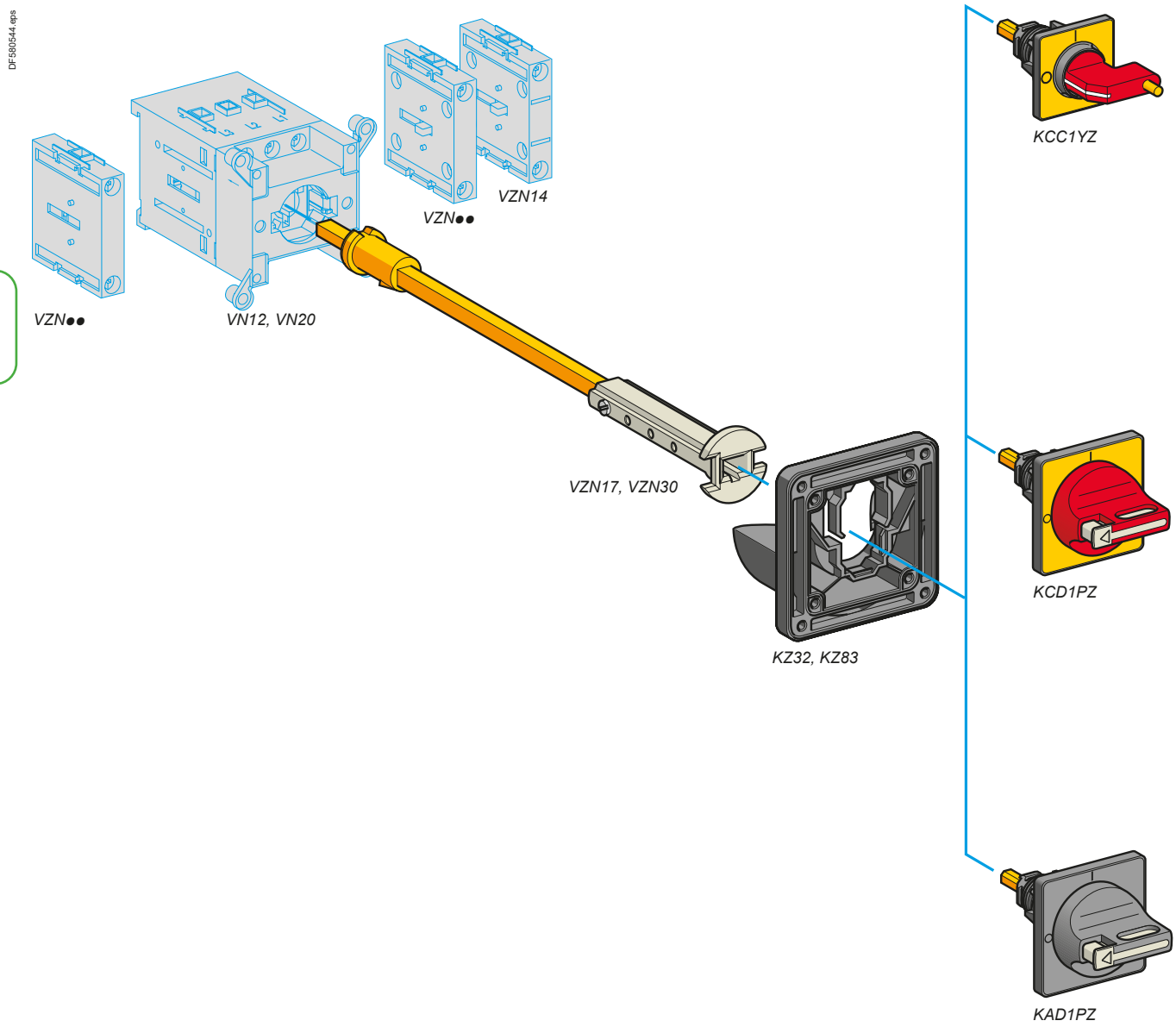
DF580544.eps
VZN14
VZN●●
VZN●●
VN12, VN20
VZN17, VZN30
KZ32, KZ83
KCC1YZ
KCD1PZ
KAD1PZ

Switch-disconnectors for standard applications

- Degree of protection IP 65.
- Marking on operator ○ |.
- Padlockable operating handle (padlocks not supplied).
- Operator fixing by 1 Ø22.5 hole; for other operators see pages B3/11 and B3/13.
- For other accessories and empty enclosures, see pages B3/14, B3/15 and chapter A1.

Operators for main and Emergency stop switch-disconnectors

Handle	Front plate mm	Reference
Red, padlockable with 1 padlock (Ø4 to Ø6)	Yellow 45 x 45	**KCC1YZ**
Red, padlockable with up to 3 padlocks (Ø4 to Ø8)	Yellow 60 x 60	**KCD1PZ**

Operators for main switch-disconnectors

Handle	Front plate mm	Reference
Black, padlockable with up to 3 padlocks (Ø4 to Ø8)	Black 60 x 60	**KAD1PZ**

Accessories for door interlocking

For rear fixing switch-disconnectors mounted at the back of an enclosure, in addition to a direct operator

Description	Front plate	Distance enclosure back/door	Sold in lots of	Unit reference
	mm	mm		
Shaft extensions	–	300…330	1	**VZN17**
		400…430	1	**VZN30**
Door interlock plate	45 x 45 or 60 x 60	–	5	**KZ32**
Plate for door mounting	45 x 45 or 60 x 60	–	5	**KZ83**

Switch-disconnectors

Characteristics: pages B3/18 to B3/21
Dimensions: pages B3/22 and B3/23
Schemes: page B3/23

PB121294.eps



VCF0

PB121295.eps



VCF5

PB121296.eps



VCCF0

Switch-disconnectors for high performance applications

- 3-pole rotary switch-disconnectors, 12 to 175 A
- Marking on operator ○ ⏽.
- Padlockable operating handle (padlocks not supplied).
- Degree of protection IP 65.

Main and Emergency stop switch-disconnectors for door mounting

Handle	Front plate mm	Fixing	Rating A	Reference	Weight kg
Red, padlockable with up to 3 padlocks (Ø4 to Ø8)	Yellow 60 x 60	Ø22.5	12	**VCD02**	0.215
			20	**VCD01**	0.215
			25	**VCD0**	0.215
			32	**VCD1**	0.215
			40	**VCD2**	0.215
		4 screws	12	**VCF02**	0.250
			20	**VCF01**	0.250
			25	**VCF0**	0.250
			32	**VCF1**	0.250
			40	**VCF2**	0.250
			63	**VCF3**	0.560
			80	**VCF4**	0.560
Red, long, padlockable with up to 3 padlocks (Ø4 to Ø8)	Yellow 90 x 90	4 screws	125	**VCF5**	1.200
			175	**VCF6**	1.200

Main and Emergency stop switch-disconnectors for mounting at back of an enclosure (1)

Handle	Front plate mm	Fixing	Rating A	Reference	Weight kg
Red, padlockable with up to 3 padlocks (Ø4 to Ø8)	Yellow 60 x 60	Ø22.5	12	**VCCD02**	0.392
			20	**VCCD01**	0.392
			25	**VCCD0**	0.392
			32	**VCCD1**	0.392
			40	**VCCD2**	0.392
		4 screws	12	**VCCF02**	0.527
			20	**VCCF01**	0.527
			25	**VCCF0**	0.527
			32	**VCCF1**	0.527
			40	**VCCF2**	0.527
			63	**VCCF3**	0.440
			80	**VCCF4**	0.680
Red, long, padlockable with up to 3 padlocks (Ø4 to Ø8)	Yellow 90 x 90	4 screws	125	**VCCF5**	1.320
			175	**VCCF6**	1.320

*(1) Unit supplied with a shaft extension **VZN17** or **VZ18** and a door interlock plate **KZ32** or **KZ74** (see page B3/14).*

Characteristics: pages B3/18 to B3/21
Dimensions: pages B3/24 and B3/25
Schemes: page B3/25

PB121515.eps



VBD01

PB119275.eps



VBF4

PB121298.eps



VVE1

Switch-disconnectors for high performance applications

- 3-pole rotary switch-disconnectors, 12 to 175 A
- Marking on operator ○╵.
- Padlockable operating handle (padlocks not supplied).
- Degree of protection IP 65.

Main switch-disconnectors for door mounting

Handle	Front plate mm	Fixing	Rating A	Reference	Weight kg
Black, padlockable with up to 3 padlocks (Ø4 to Ø8)	Black 60 x 60	Ø22.5	12	**VBD02**	0.215
			20	**VBD01**	0.215
			25	**VBD0**	0.215
			32	**VBD1**	0.215
			40	**VBD2**	0.215
		4 screws	12	**VBF02**	0.250
			20	**VBF01**	0.250
			25	**VBF0**	0.250
			32	**VBF1**	0.250
			40	**VBF2**	0.250
			63	**VBF3**	0.560
			80	**VBF4**	0.560
Black, long, padlockable with up to 3 padlocks (Ø4 to Ø8)	Black 90 x 90	4 screws	125	**VBF5**	1.200
			175	**VBF6**	1.200

Main and Emergency stop switch-disconnectors

For mounting in an enclosure or for modular distribution boards

Handle	Front plate mm	Fixing	Rating A	Reference	Weight kg
Red, padlockable with 1 padlock (Ø4 to Ø6)	Yellow 45 x 45	4 screws	25	**VVE0**	0.250
			32	**VVE1**	0.250
			40	**VVE2**	0.250
			63	**VVE3**	0.530
			80	**VVE4**	0.530

Main switch-disconnectors

For mounting in an enclosure or for modular distribution boards

Handle	Front plate mm	Fixing	Rating A	Reference	Weight kg
Black, not padlockable	Black 45 x 45	4 screws	25	**VVD0**	0.250
			32	**VVD1**	0.250
			40	**VVD2**	0.250
			63	**VVD3**	0.560
			80	**VVD4**	0.560

Characteristics: pages B3/18 to B3/21
Dimensions: pages B3/24 and B3/25
Schemes: page B3/25

PB121299.eps



V5

580537.tif



VZ0

580538.tif



VZ11

580539.tif



VZ15

580540.tif



VZ20

Switch-disconnectors for high performance applications

Switch bodies

Description	Rating A	Reference
3-pole switch-disconnectors (1)	12	**V02**
	20	**V01**
	25	**V0**
	32	**V1**
	40	**V2**
	63	**V3**
	80	**V4**
	125	**V5**
	175	**V6**

Add-on modules

Description	Rating A	Reference
Main pole modules	12	**VZ02**
	20	**VZ01**
	25	**VZ0**
	32	**VZ1**
	40	**VZ2**
	63	**VZ3**
	80	**VZ4**
Neutral pole modules with early make and late break contacts (1)	12 to 40	**VZ11**
	63 to 80	**VZ12**
	125 and 175	**VZ13**
Earthing modules	12 to 40	**VZ14**
	63 and 80	**VZ15**
	125 and 175	**VZ16**

Auxiliary contact block modules

Description	Type	Reference
Auxiliary contact block modules with 2 auxiliary contacts	N/O + N/C (2)	**VZ7**
	N/O + N/O	**VZ20**

(1) Protection shrouds are available if required: see page B3/14.
(2) Late make N/O, early break N/C contacts

Switch-disconnectors for high performance applications

Maximum number of add-on modules that can be fitted on a switch body

1 add-on module on each side of the switch body

VZ7 or VZ20	+	**V0●**	+	VZ7 or VZ20	VZ7	+	**V5**	+ VZ7
or				or	or			or
VZ11 or VZ12	+	**V0**	+	VZ11 or VZ12	VZ20	+	**or**	+ VZ20
or		**to**		or	or			or
VZ14 or VZ15	+		+	VZ14 or VZ15	VZ13	+	**V6**	+ VZ13
or		**V4**		or	or			or
VZ0●/VZ0 to VZ4	+		+	VZ0●/VZ0 to VZ4	VZ16	+		+ VZ16

2 add-on modules on each side of the switch body

VZ0●	+ VZ0●	+ **V0●**	+ VZ0●	+ VZ7	or VZ20	or VZ11	or VZ14
VZ0	+ VZ0	+ **V0**	+ VZ0	+ VZ7	or VZ20	or VZ11	or VZ14
VZ1	+ VZ1	+ **V1**	+ VZ1	+ VZ7	or VZ20	or VZ11	or VZ14
VZ2	+ VZ2	+ **V2**	+ VZ2	+ VZ7	or VZ20	or VZ11	or VZ14
VZ3	+ VZ3	+ **V3**	+ VZ3	+ VZ7	or VZ20	or VZ12	or VZ15
VZ4	+ VZ4	+ **V4**	+ VZ4	+ VZ7	or VZ20	or VZ12	or VZ15

Note: *The add-on modules mounted next to the switch body are main pole modules. Maximum of 3 main pole modules per switch body.*

Auxiliary switch switching angles

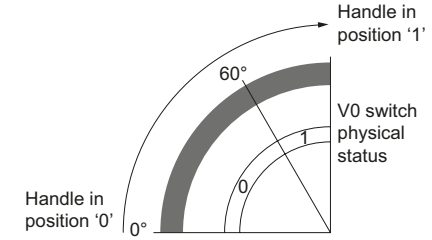

Switching angle representation - example with V0 switch

0: contact open 1: contact close

Handle travel 0 > 1		0°	30°	60°	90°
3-pole switch-disconnectors V02 / V01 / V0 / V1 / V2 / V3 / V4 / V5 / V6				60°	
			0		1
Main pole modules VZ02 / VZ01 / VZ0 / VZ1 / VZ2 / VZ3 / VZ4				60°	
			0		1
Neutral pole modules with early make and late break contacts VZ11 / VZ12 / VZ13				45°	
			0		1
Auxiliary contact block modules with 2 auxiliary contacts (N/0+N/C) VZ7					75°
Late make N0 and earlier break NC	N/0		0		1
(Early break N0 and late make NC for travel 1-0)	N/C	1		0	
			20°		
Auxiliary contact block modules with 2 auxiliary contacts (N/0+N/C) VZ20				60°	
			0		1
			0		1
				60°	

Characteristics: pages B3/18 to B3/21
Dimensions: pages B3/24 and B3/25
Schemes: page B3/25

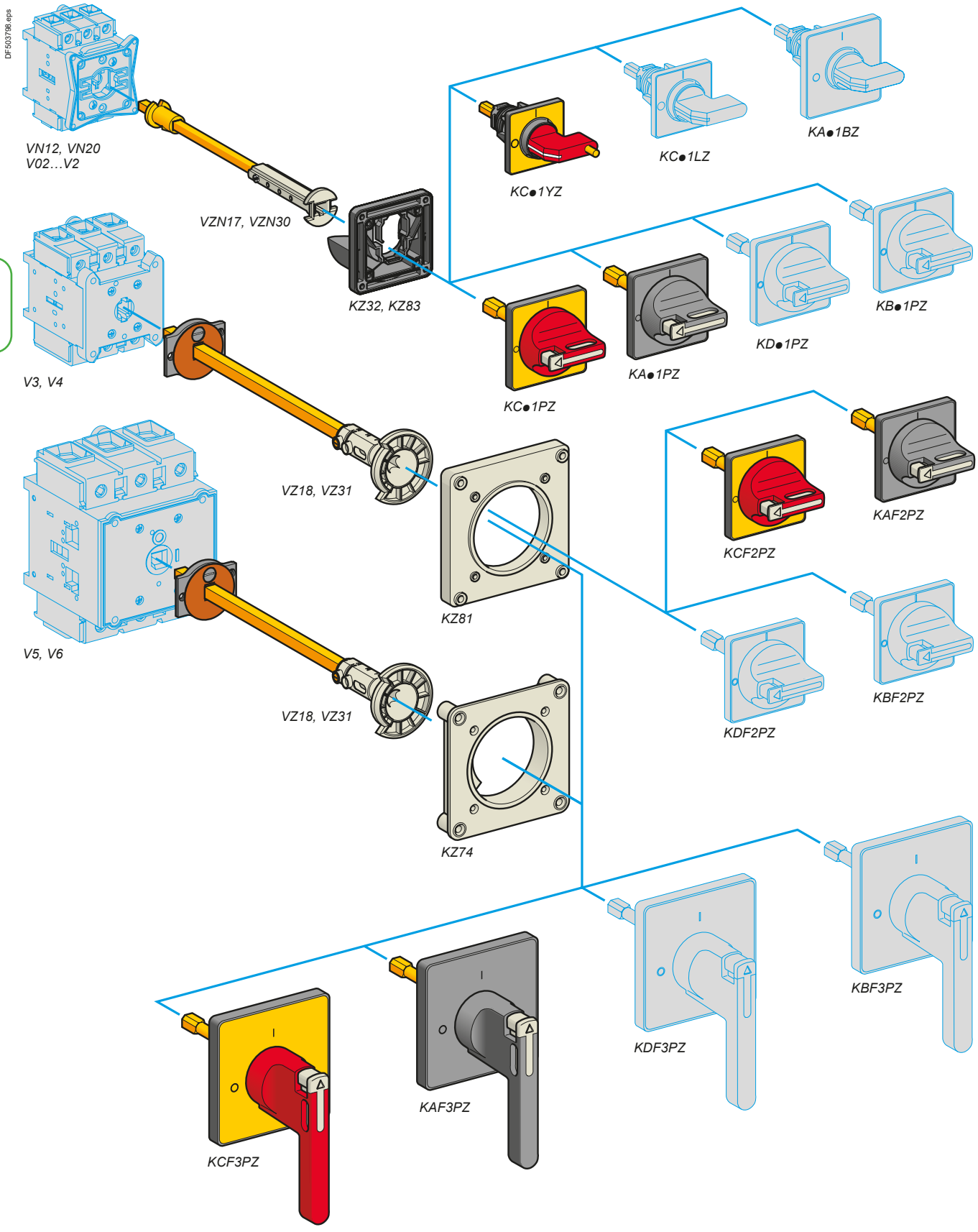

Life Is On Schneider Electric

- Marking on operator .
- Padlockable operating handle (padlocks not supplied).
- Degree of protection IP 65.

Handles and front plates for main and Emergency stop switch-disconnectors

For switch body	Operator			Reference
	Handle	Front plate		
		Dimensions	Fixing	
		mm		
VN12, VN20 V02…V2	Red, padlockable with 1 padlock (Ø4 to Ø6)	Yellow 45 x 45	Ø22.5	**KCC1YZ**
			4 screws	**KCE1YZ**
	Red, padlockable with up to 3 padlocks (Ø4 to Ø8)	Yellow 60 x 60	Ø22.5	**KCD1PZ**
			4 screws	**KCF1PZ**
V3 and V4	Red, padlockable with up to 3 padlocks (Ø4 to Ø8)	Yellow 60 x 60	4 screws	**KCF2PZ**
V5 and V6	Red, long, padlockable with up to 3 padlocks (Ø4 to Ø8)	Yellow 90 x 90	4 screws	**KCF3PZ** (1)

Handles and front plates for main switch-disconnectors

For switch body	Operator			Reference
	Handle	Front plate		
		Dimensions	Fixing	
		mm		
VN12, VN20 V02…V2	Black, padlockable with up to 3 padlocks (Ø4 to Ø8)	Black 60 x 60	Ø22.5	**KAD1PZ**
			4 screws	**KAF1PZ**
V3 and V4	Black, padlockable with up to 3 padlocks (Ø4 to Ø8)	Black 60 x 60	4 screws	**KAF2PZ**
V5 and V6	Black, long, padlockable with up to 3 padlocks (Ø4 to Ø8)	Black 90 x 90	4 screws	**KAF3PZ** (1)

*(1) For door mounting of 63 and 80 A switch-disconnectors, adapter plate **KZ106** must be ordered separately (see page B3/14).*

Switch-disconnectors

Characteristics: pages B3/18 to B3/21
Dimensions: pages B3/24 and B3/25
Schemes: page B3/25

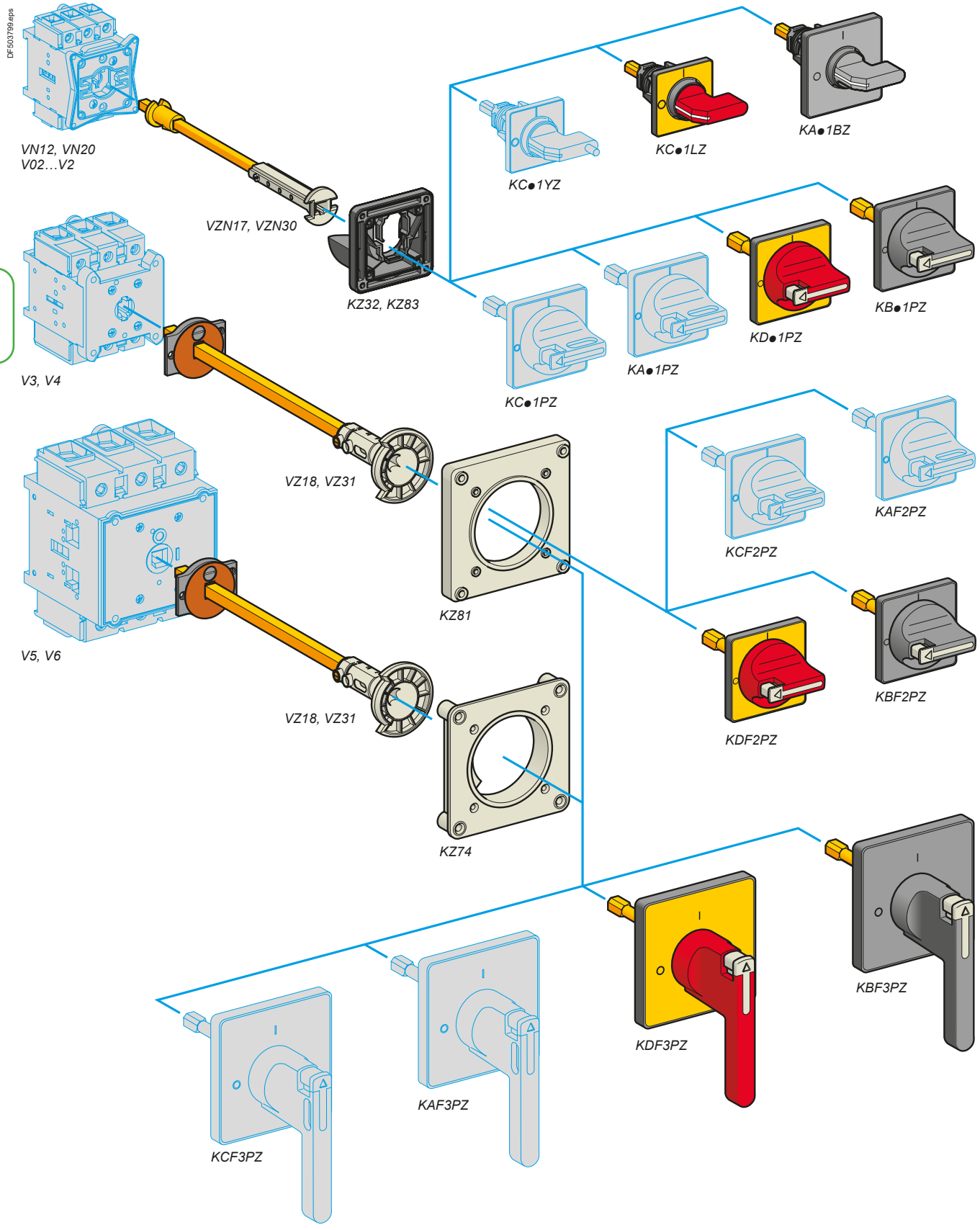

Life Is On Schneider Electric

Product references

- Marking on operator .
- Degree of protection IP 65.

Handles and front plates for Emergency stop switch-disconnectors

For switch body	Operator			Reference
	Handle	Front plate		
		Dimensions	Fixing	
		mm		
VN12, VN20 V02…V2	Red, not padlockable	Yellow 45 x 45	Ø22.5	**KCC1LZ**
			4 screws	**KCE1LZ**
		Yellow 60 x 60	Ø22.5	**KDD1PZ**
			4 screws	**KDF1PZ**
V3 and V4	Red, long, not padlockable	Yellow 60 x 60	4 screws	**KDF2PZ**
V5 and V6	Red, long, not padlockable	Yellow 90 x 90	4 screws	**KDF3PZ** (1)

Handles and front plates for switch-disconnectors

For switch body	Operator			Reference
	Handle	Front plate		
		Dimensions	Fixing	
		mm		
VN12, VN20 V02…V2	Black, not padlockable	Black 45 x 45	4 screws	**KAE1BZ**
		Black 60 x 60	Ø22.5	**KBD1PZ**
			4 screws	**KBF1PZ**
V3 and V4	Black, not padlockable	Black 60 x 60	4 screws	**KBF2PZ**
V5 and V6	Black, not padlockable	Black 90 x 90	4 screws	**KBF3PZ** (1)

*(1) For door mounting of 63 and 80 A switch-disconnectors, adapter plate **KZ106** must be ordered separately (see next page).*

Switch-disconnectors

Characteristics: pages B3/18 to B3/21
Dimensions: pages B3/24 and B3/25
Schemes: page B3/25

Product references

580583.tif



VZ8

PB121516.eps



VZ26

580584.tif



VZ29

Input terminal protection shrouds

Description	For use on	Reference
For switch bodies (3-pole shroud)	V02…V2	**VZ8**
	V3 and V4	**VZ9**
	V5 and V6	**VZ10**
For add-on pole modules (single-pole shroud)	VZ02…VZ2, VZ11, VZ14	**VZ26**
	VZ3, VZ4, VZ12, VZ15	**VZ27**
	VZ13, VZ16	**VZ28**
For contact blocks with 2 auxiliary contacts	–	**VZ29**

Components for door interlocking

For rear fixing switch-disconnectors mounted at the back of an enclosure, in addition to a direct operator

Description	For use on	Distance enc. back/door	Sold in lots of	Unit reference
		mm		
Shaft extensions	VN12, VN20 V02…V2	300…330	1	**VZN17** (1)
		400…430	1	**VZN30** (1)
	V02…V2	300…330	1	**VZ17**
		400…430	1	**VZ30**
	V3 and V4	300…320	1	**VZ18**
		400…420	1	**VZ31**
	V5 and V6	330…350	1	**VZ18**
		430…450	1	**VZ31**
Door interlock plates	VN12, VN20 V02…V2	–	5	**KZ32**
	V3…V6	–	5	**KZ74**

Description	For use on	Front plate dimensions	Sold in lots of	Unit reference
		mm		
Plates for door mounting of handles with 4 screw fixing	VN12, VN20 V02…V2	45 x 45 or 60 x 60	5	**KZ83**
	V3…V6	60 x 60 or 90 x 90	5	**KZ81**
Adapter plate for switch-disconnectors	V3 and V4	90 x 90	5	**KZ106**

(1) Can be used with V02 to V2 switches.

PB121517.eps



VZ31

580585.tif

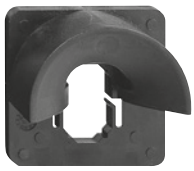

KZ32

PB121518.eps



KZ81

Characteristics: pages B3/18 to B3/21
Dimensions: pages B3/24 and B3/25
Schemes: page B3/25

Life Is On Schneider Electric

Product references

PB121519.eps



KZ15

PB121520.eps



KZ67

PB121521.eps



Z01

Accessories for operators

Description	For use on	Front plate dimensions	Sold in lots of	Unit reference
		mm		
Legend holder with silver coloured blank legend plate	Front plate	45 x 45	5	**KZ13**
		60 x 60	5	**KZ15**
		90 x 90	5	**KZ103**
Legend holders without legend plate	Front plate	45 x 45	20	**KZ14**
		60 x 60	10	**KZ16**
		90 x 90	5	**KZ101**
Silver coloured blank legend plates for engraving by customer	KZ16	–	10	**KZ77**
Seals	VN12, VN20	45 x 45	5	**KZ65**
	V02…V2	60 x 60	5	**KZ66**
	V3 and V4	60 x 60	5	**KZ62**
	V3…V6	90 x 90	5	**KZ67**
Tightening tool	For operators with Ø22.5 fixing	–	5	**Z01**

Characteristics: pages B3/18 to B3/21
Dimensions: pages B3/24 and B3/25
Schemes: page B3/25

Product references

KAD1PZ	VBF4GE	VCFN20GE
KAD1XZ	VBF5	VCFN25GE
KAE1BZ	VBF5GEN	VCFN32GE
KAF1PZ	VBF6	VCFN40GE
KAF2PZ	VBF6GEN	VCFXGE1
KAF2XZ	VBFXGE1	VCFXGE2
KAF3PZ	VBFXGE2	VCFXGE4
KBD1PZ	VBFXGE4	VCFXGE6
KBF1PZ	VBFXGE6	VGP1
KBF2PZ	VC1GUN	VGPCLIP1
KBF3PZ	VC2GUN	VN12
KCC1LZ	VC3GUN	VN20
KCC1YZ	VC4GUN	VVD0
KCD1PZ	VC5GUN	VVD1
KCD1YZ	VC6GUN	VVD2
KCE1LZ	VCCD0	VVD3
KCE1YZ	VCCD01	VVD4
KCF1PZ	VCCD02	VVE0
KCF1YZ	VCCD1	VVE1
KCF2PZ	VCCD2	VVE2
KCF2YZ	VCCDN12	VVE3
KCF3PZ	VCCDN20	VVE4
KCG2YZ	VCCF0	VZ0
KDD1PZ	VCCF01	VZ01
KDF1PZ	VCCF02	VZ02
KDF2PZ	VCCF1	VZ1
KDF3PZ	VCCF2	VZ10
KZ32	VCCF3	VZ11
KZ74	VCCF4	VZ12
KZ80	VCCF5	VZ13
KZ81	VCCF6	VZ14
KZ82	VCD0	VZ15
KZ83	VCD01	VZ16
V0	VCD02	VZ17
V01	VCD1	VZ17L127
V02	VCD2	VZ17L69
V1	VCDN12	VZ18
V2	VCDN20	VZ2
V3	VCF0	VZ20
V4	VCF01	VZ26
V5	VCF01GE	VZ27
V6	VCF01GEGP	VZ28
VBD0	VCF02	VZ29
VBD01	VCF02GE	VZ3
VBD02	VCF02GEGP	VZ30
VBD1	VCF0GE	VZ31
VBD2	VCF0GEGP	VZ4
VBDN12	VCF1	VZ45
VBDN20	VCF1GE	VZ7
VBF0	VCF1GEGP	VZ8
VBF01	VCF1YZ	VZ9
VBF01GE	VCF2	VZN05
VBF02	VCF2GE	VZN06
VBF02GE	VCF3	VZN08
VBF0GE	VCF3GE	VZN11
VBF1	VCF4	VZN12
VBF1GE	VCF4GE	VZN14
VBF2	VCF5	VZN17
VBF2GE	VCF5GEN	VZN19
VBF3	VCF6	VZN20
VBF3GE	VCF6GEN	VZN26
VBF4	VCFN12GE	VZN30

This document is current. Click on the product reference to get the most recent availability status (hyperlink to **se.com** product datasheet). If your product variant is no longer available, please consult your distributor or regional sales office.

Technical Data for Designers

Contents

Characteristics ..... B3/18 to B3/21
Switch-disconnectors for standard applications:
> Dimensions ..... B3/22 to B3/23
> Schemes B3/23
Switch-disconnectors for high performance applications:
> Dimensions ..... B3/24 to B3/25
> Schemes B3/25

Characteristics

Environment

Switch type (bare type)				VN12 VZN12	V02 VZ02	VN20 VZN20	V01 VZ01	V0 VZ0	VVD0 VVE0	V1 VZ1	VVD1 VVE1
Conforming to standards				IEC/EN 60947-3 and UL/CSA 60947-4-1							
Product certifications				UL, CSA, UKCA	UL, CSA, DNV-GL, CCC, IEC, UKCA	UL, CSA, UKCA	UL, CSA, DNV-GL, IEC, EAC, CCC (1), UKCA				
Degree of protection with protection shroud				IP 20 conforming to IEC 60529							
Ambient air temperature			**° C**	-20…+50							
Flame resistance			**° C**	960 conforming to IEC 60695-2-11							
Shock resistance 1/2 sine wave = 11ms conforming to IEC60068-2-27			**gn**	15	30	15	30				
Vibration resistance 10…150 Hz conforming to IEC 60068-2-6			**gn**	5	1						

Electrical characteristics, a.c. operation

Switch type (bare type)				VN12 VZN12	V02 VZ02	VN20 VZN20	V01 VZ01	V0 VZ0	VVD0 VVE0	V1 VZ1	VVD1 VVE1
Rated operational voltage (Ue)			**V**	690							
Rated impulse withstand voltage (Uimp)			**kV**	6	8	6	8				
Conventional thermal currents in free air (Ith) and rated uninterrupted (Iu)			**A**	12		20		25		32	
Conventional thermal current in enclosure (Ithe)			**A**	10		16		20		25	
Power dissipation per pole for the above operational currents	AC-23A		**W**	–				1.25		2	
	AC-21A		**W**	–				3.2		5	
Rated operational power and current	AC-21A/22A	230…690 V	**A**	12		20		25		32	
	AC-23A	230 V	**A/kW**	10.6/3		14/4		19.7/5.5			
		240 V	**A/kW**	10.6/3		14/4		19.9/5.5		18.9/5.5	
		400 V	**A/kW**	8.1/4		11/5.5		14.5/7.5		21.8/11	
		415 V	**A/kW**	8.1/4		11/5.5		14/7.5		21/11	
		500 V	**A/kW**	8.9/5.5		11.9/7.5		16.7/11			
		690 V	**A/kW**	8.6/7.5		12.3/11		17.5/15			
Rated operational power	AC -3	230/240 V	**kW**	1.5		3		4			
		400/415 V	**kW**	3		4		5.5		7.5	
		500 V	**kW**	4		5.5		7.5			
		690 V	**kW**	4	5.5		7.5	11			
Intermittent duty class				30							
Characteristics in normal operating conditions	Rated making capacity AC-21A/22A/23A (I rms)		**A/** 400 V	120		200		250		320	
	Rated breaking capacity AC-21A/22A/23A (I rms)		**A/** 400 V	120		200				250	
Short-circuit characteristics	Permissible rms short time rating (Icw)		**A/** 400V/1s	140	300	140	300			384	
	Rated making capacity under short-circuit conditions (Icm) I peak		**kA/** 400 V	0.5	1	0.5	1				
	Rated conditional short-circuit current (I rms) with aM/gG fuses		**kA/** 400 V	6	10	6	10				
			A	12		20		25		35	

(1) CCC: except for VVD, VVE switches.

References: page B3/3
Dimensions: page B3/22
Schemes: page B3/23

V2 VZ2	VVD2 VVE2	V3 VZ3	VVD3 VVE3	V4 VZ4	VVD4 VVE4	V5	V6	VZ7 VZ20	VZN05 VZN06
IEC/EN 60947-3 and UL/CSA 60947-4-1								IEC/EN 60947-5-1, UL/CSA 60947-5-1	
UL, CSA, DNV-GL, IEC, EAC, CCC [1], UKCA									
IP 20 conforming to IEC 60529									
-20…+50									
960 conforming to IEC 60695-2-11									
30								–	
1								–	

V2 VZ2	VVD2 VVE2	V3 VZ3	VVD3 VVE3	V4 VZ4	VVD4 VVE4	V5	V6	VZ7 VZ20	VZN05 VZN06
690									
8									6
40		63		80		125	175	12	12
32		50		63		100	140	10	10
2.4		4.2		5.1		7.5	11	–	
5.4		6.4		12.5		15	25	–	
40		63		80		125	160	Ie/AC-15	
25.8/7.5		50.3/15		61.2/18.5		71.9/22	96.6/30	6 A	
24.8/7.5		48.2/15		58.5/18.5		68/22	92.7/30	6 A	
29/15		41.5/22		57/30		68.5/37	83/45	4 A	
28/15		40/22		55/30		66/37	80/45	4 A	
28.5/18.5		44/30		54/37		64.5/45	79/55	2 A	
17.5/15		25/22		33/30		42/37	49/45	1 A	
5.5		11		15		22	30	–	
11		18.5		22		30	37	–	
15		22		30		37	45	–	
11		18.5				30	37	–	
30								–	
400		630		800		1250	1750	–	
320		500		640		1000	1400	–	
480		756		960		1500	2100	–	
1		2.1				2.8		–	
10								1	
50		63		80		125	200	16	16

(1) CCC: except for VVD, VVE switches.

References: page B3/3
Dimensions: page B3/22
Schemes: page B3/23

Characteristics

Electrical characteristics, d.c. operation

Switch type (bare type)				VN12 VZN12	V02 VZ02	VN20 VZN20	V01 VZ01	V0 VZ0	VVD0 VVE0	V1 VZ1	VVD1 VVE1
Rated operational current DC-1 (L/R = 1ms)	24 V	1 contact	**A**	12		20		25		32	
		2 contacts	**A**	12		20		25		32	
		3 contacts	**A**	12		20		25		32	
	48 V	1 contact	**A**	12		20		25		32	
		2 contacts	**A**	12		20		25		32	
		3 contacts	**A**	12		20		25		32	
	60 V	1 contact	**A**	12		20		25		32	
		2 contacts	**A**	12		20		25		32	
		3 contacts	**A**	12		20		25		32	
	110 V	1 contact	**A**	1.5		2		9		10	
		2 contacts	**A**	8		10		12		16	
		3 contacts	**A**	12		20		25		32	
	220 V	1 contact	**A**	1.5		2		2.5		3	
		2 contacts	**A**	7		8		10		12	
		3 contacts	**A**	10		14		16		20	
	250 V	1 contact	**A**	0.6		0.7		0.8		1	
		2 contacts	**A**	3		4		6		8	
		3 contacts	**A**	8		10		12		16	
Rated operational current DC-2 to DC-5 (L/R = 1ms)	24 V	1 contact	**A**	12		20		25		32	
		2 contacts	**A**	12		20		25		32	
		3 contacts	**A**	12		20		25		32	
	48 V	1 contact	**A**	12		20		25		32	
		2 contacts	**A**	12		20		25		32	
		3 contacts	**A**	12		20		25		32	
	60 V	1 contact	**A**	10		14		16		20	
		2 contacts	**A**	12		20		25		32	
		3 contacts	**A**	12		20		25		32	
	110 V	1 contact	**A**	1.5		2		2.5		3	
		2 contacts	**A**	3		4		5		6	
		3 contacts	**A**	12		20		25		32	
	220 V	1 contact	**A**	0.4		0.5		0.5		0.8	
		2 contacts	**A**	1.4		1.5		1.5		2	
		3 contacts	**A**	1		2		3		4	
	250 V	1 contact	**A**	0.3		0.4		0.5		0.8	
		2 contacts	**A**	0.4		0.6		0.8		1	
		3 contacts	**A**	1.2		2.4		1.6		2	

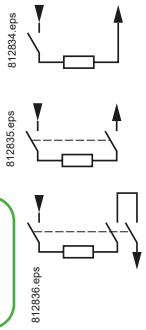

Other characteristics

Switch type (bare type)			VN12 VZN12	V02 VZ02	VN20 VZN20	V01 VZ01	V0 VZ0	VVD0 VVE0	V1 VZ1	VVD1 VVE1
Mechanical durability (millions of operating cycles)			0.05	0.1	0.05	0.1				
Electrical durability in cat. AC-21 (millions of operating cycles)			0.05	0.1	0.05	0.1				
Electrical durability in cat. DC-1 to 5 (operating cycles)			30000							
Suitable for isolation			Yes							
Cabling	Flexible cable + cable end	**mm²**	4	6	4	6				
	Solid cable	**mm²**	4	10	4	10				
Tightening torque		**N.m**	0.7	2.1	0.7	2.1				

References: page B3/3
Dimensions: page B3/22
Schemes: page B3/23

V2 VZ2	VVD2 VVE2	V3 VZ3	VVD3 VVE3	V4 VZ4	VVD4 VVE4	V5	V6	VZ7 VZ20	VZN05 VZN06
40		63		80		125	175	8 (Ie/DC-1)	
40		63		80		125	175	–	
40		63		80		125	175	–	
40		63		80		125	175	8 (Ie/DC-1)	
40		63		80		125	175	–	
40		63		80		125	175	–	
35		40		50		60	70	4 (Ie/DC-1)	
40		63		80		125	175	–	
40		63		80		125	175	–	
12		20		25		30	37	2 (Ie/DC-1)	
20		63		80		125	175	–	
40		63		80		125	175	–	
4		6		8		12	15	1 (Ie/DC-1)	
14		25		30		40	50	–	
25		30		40		80	100	–	
2		4		5		3	10	0.8 (Ie/DC-1)	
12		20		25		30	40	–	
20		30		40		50	61	–	
40		63		80		125	175	–	
40		63		80		125	175	–	
40		63		80		125	175	–	
40		63		80		125	175	–	
40		63		80		125	175	–	
40		63		80		125	175	–	
25		40		50		60	70	–	
40		63		80		125	175	–	
40		63		80		125	175	–	
5		6		8		10	12	–	
8		10		20		22	24	–	
40		50		63		70	80	–	
1		1.5		2		2.2	2.4	–	
3		4		6		7	8	–	
7		10		15		16	13	–	
1		1.2		1.5		1.6	1.8	–	
2		3		6		7	8	–	
6		8		10		12	14	–	

V2 VZ2	VVD2 VVE2	V3 VZ3	VVD3 VVE3	V4 VZ4	VVD4 VVE4	V5	V6	VZ7 VZ20	VZN05 VZN06
0.1		0.03						0.1	0.05
0.1		0.03						0.1 (AC-15)	0.05
30000								30000 (DC-1)	
Yes								–	
6		16				70		2 x 0.75…1.5	
10		25				95		2 x 1…2.5	
2.1		4				22.6		0.7	

References:
page B3/3

Dimensions:
page B3/22

Schemes:
page B3/23

Dimensions

Switch-disconnectors

Switch bodies VN12, VN20

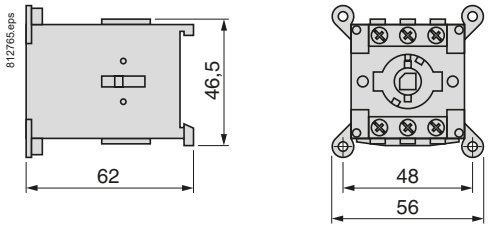

Add-on modules VZN12, VZN20

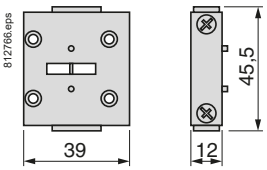

Add-on modules VZN11, VZN14 VZN05 and VZN06

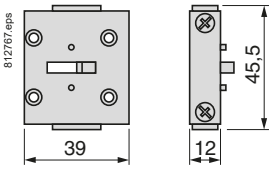

Mounting

Switch-disconnector mounted on enclosure door

VCDN12, VCDN20, VBDN12, VBDN20
Single hole fixing

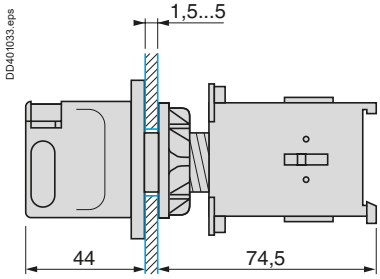

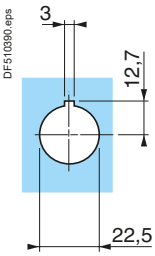

VN12, VN20
4 screw fixing

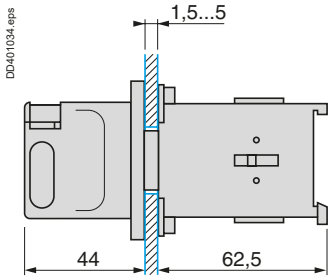

45 x 45 front plate

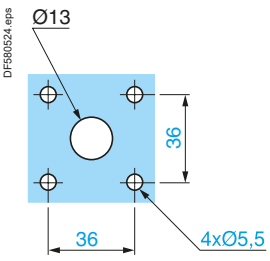

60 x 60 front plate

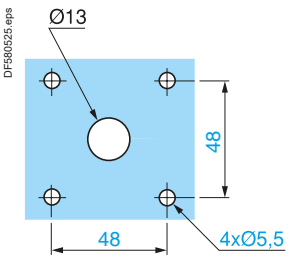

References:
pages B3/2 to B3/5
Characteristics:
pages B3/18 to B3/21
Schemes:
page B3/23

Mounting (continued)

Switch-disconnector mounted at back of enclosure with shaft extension VZN17 or VZN30 (clip-on mounting on ⊔ rail)

VN12, VN20

Single hole fixing

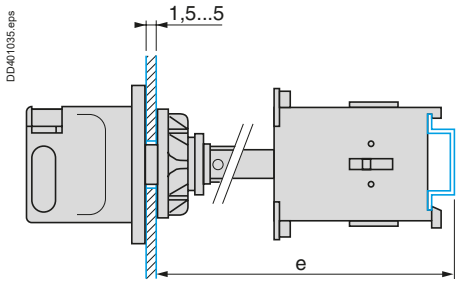

4 screw fixing

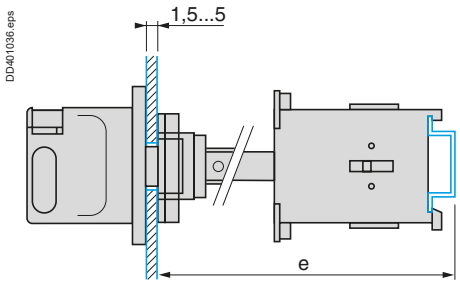

	Shaft extension	Distance (e) enclosure back/door
		mm
VN12, VN20	VZN17	300…330
	VZN30	400…430

Schemes

Switch body VN12, VN20

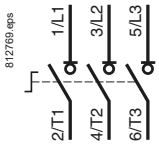

Main pole module VZN12, VZN20



Neutral pole module VZN11



Auxiliary contact blocks

VZN05



VZN06



Switch-disconnectors
Ref.

References:
pages B3/2 to B3/5

Characteristics:
pages B3/18 to B3/21

Dimensions

Switch-disconnectors

Switch bodies V0●, V0 to V2

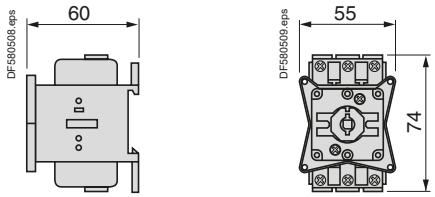

Switch bodies V3 to V6

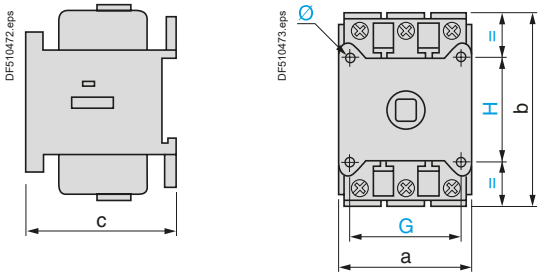

	a	b	c	G	H	Ø
V3, V4	60	83	65	48	48	5.5
V5, V6	90	125	90	68	68	5.5

Add-on modules VZ02 to VZ4 and VZ11 to VZ16

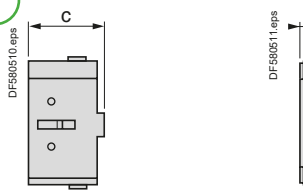

Add-on modules VZ7, VZ20

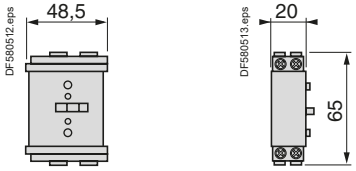

	a	b	c
VZ02 and VZ01, VZ0 to VZ2, VZ11, VZ14	16	74	35
VZ3, VZ4, VZ12, VZ15	20	83	46
VZ13, VZ16	30	125	63

Mounting

Switch-disconnector mounted on enclosure door

Single hole fixing V0●, V0 to V2

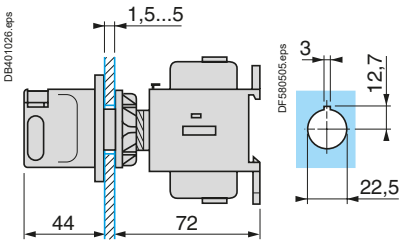

4 screw fixing V0●, V0 to V4

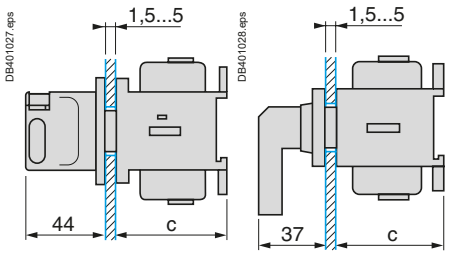

	c
V0●, V0 to V2	60
V3, V4	65

4 screw fixing 45 x 45 front plate V0●, V0 to V2

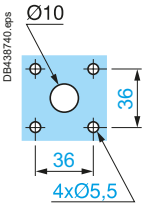

4 screw fixing 60 x 60 front plate V0●, V0 to V4

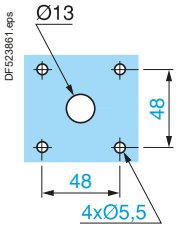

V5 and V6. 4 screw fixing

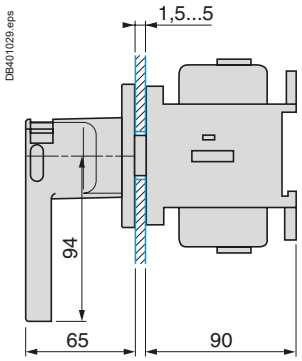

90 x 90 front plate

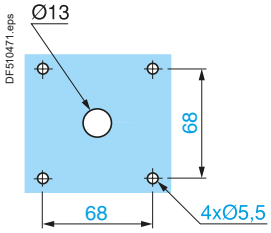

References:
pages B3/6 to B3/9
Characteristics:
pages B3/18 to B3/21
Schemes:
page B3/25

Mounting (continued)

Switch-disconnector mounted at back of enclosure

4 screw fixing
V0●, V0 to V2 with shaft extension VZ17 or VZ30 (clip-on mounting on ⊔ rail possible for V0● to V2)

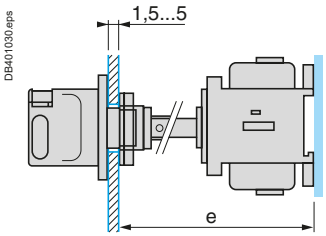

Single hole fixing
V3 to V4 with shaft extension VZ18 or VZ31

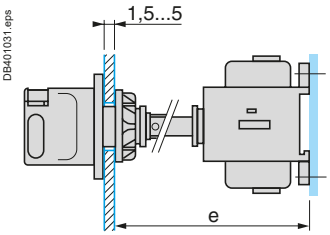

V5 and V6 with shaft extension VZ18 or VZ31

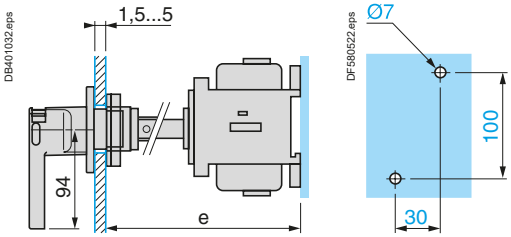

	Shaft extension	Distance (e) enc.back/door	Ø	G
		mm		
V02 and V01 V0 to V2	VZ17	300…330	2 x 4.2	15
	VZ30	400…430	2 x 4.2	15
V3 and V4	VZ18	300…320	2 x 5	20
	VZ31	400…420	2 x 5	20

	Shaft extension	Distance (e) enc. back/door
		mm
V5 and V6	VZ18	300…350
	VZ31	430…450

Switch-disconnectors for modular distribution boards

VV●0 to VV●2

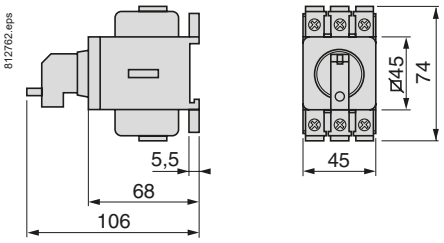

VV●3 to VV●4

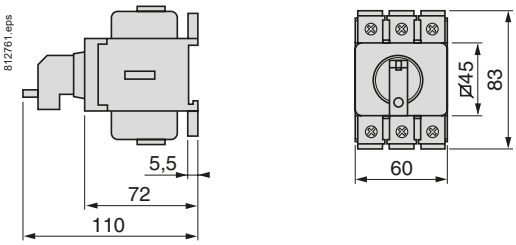

Schemes

Switch body

V02 and V01
V0 to V6

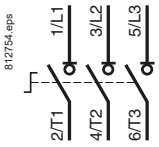

Main pole module

VZ02 and VZ01
VZ0 to VZ4



Neutral pole module

VZ11 to VZ13



Auxiliary contact blocks

VZ7

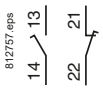

VZ20



References:
pages B3/6 to B3/9

Characteristics:
pages B3/18 to B3/21

TeSys Power
Fuse carriers

Fuse carriers

Type of product	Range		Pages
Introduction			B4/2
For protection of control circuits or transformer	Up to 25, 32, 50 or 125 A		B4/3
For protection of control circuits or transformer For North American market	Up to 30 A		B4/5
For protection of motors or transformers	Up to 25, 32, 50 A		B4/6

Technical Data for Designers B4/11

Operation: safety

The fuse carrier performs two basic functions:
- it isolates the downstream circuit by means of a visible break and wide opening contacts,
- it holds the cartridge fuses designed to protect the installation against short-circuits.

The type of cartridge fuse needed to protect the circuit must be determined before selecting the fuse carrier.

Cartridge fuse selection (type, rating, size)

Type

Application	■ Motor protection. ■ Transformer protection.
Solution	■ **aM type** fuses. These fuses are designed to withstand high current peaks of a very short duration. They must be combined with a thermal overload relay coupled with a contactor.
Application	■ Lighting circuit protection. ■ Supply line protection. ■ Furnace protection.
Solution	■ **gG** type fuses, which are more widely used but whose limiting capacity is weaker than that of **aM** type fuses.

Rating

gG fuses
aM fuses

See standard NF C 15-100.
Table 53 A paragraph 532-2-1 and table 52 C paragraph 523-1.

Motors 3 x 220 V		Motors 3 x 400 V		Cartridge fuses type aM		Fuse carrier
P	in	P	in	Size	Rating	
kW	A	kW	A		A	
9	32	15	28.5	10 x 38	32	**LS1D32**
11	39	22	44	14 x 51	50	**GK1EK**
22	75	37	73	22 x 58	80	**GK1FK**

Size

Use the “fuse characteristics” table opposite to select the correct fuse size according to:
- the nominal current of the circuit to be protected,
- the operational voltage.

Fuse carrier selection

Application	**Isolation** of a circuit for safety reasons only.
Solution	The fuse carrier may be fitted with links. The maximum permissible current is indicated in the “pole characteristics” table opposite.
Application	**Isolation** of a circuit and its **protection** against short-circuits.
Solution	Select a fuse carrier according to: ■ the type of cartridge fuse required, ■ the maximum permissible current in the fuse carrier poles (see “pole characteristics” table opposite). If the operational current is greater than the maximum permissible current in the poles of the fuse carrier corresponding to the cartridge fuse size selected, select the fuse carrier the next size up. The **safety** provided by using a fuse carrier can be increased by adding a padlocking device with up to three padlocks.

Recommendations for use

The fuse carrier conforms to utilisation category AC-21A/22A of standard IEC 60947-3. It is therefore recommended that the fuse carrier early break auxiliary contacts always be inserted in the coil circuit of the contactor with which it is in series. If the fuse carrier is not associated with a contactor, it is essential to ensure that it will be operated off-load.

Fuse carriers
Ref.

Product references - DF type



DF101



DF103



DF141



DF143NC



DF221



DF223NC



DF101NV



DF103V



DF141NV



DF143VC



DF221NV



DF223VC

For protection of control circuits or transformers

Fuse carriers (1)

Conventional thermal current (Ith)	Size of cartridge fuse or link	Composition	Sold in lots of	Unit reference
A	mm			
25	8.5 x 32	1 P	12	**DF81**
		N	12	**DF10N**
		1 P + N (2)	6	**DF81N**
		2 P	6	**DF82**
		3 P	4	**DF83**
		3 P + N (2)	3	**DF83N**
32	10 x 38	1 P	12	**DF101**
		N	12	**DF10N**
		1 P + N (2)	6	**DF101N**
		2 P	6	**DF102**
		3 P	4	**DF103**
		3 P + N (2)	3	**DF103N**
50	14 x 51	1 P	6	**DF141**
		N	6	**DF14N**
		1 P + N (2)	3	**DF141N**
		2 P	3	**DF142**
		3 P	2	**DF143C** (3)
		3 P + N (2)	1	**DF143NC** (3)
125	22 x 58	1 P	6	**DF221**
		N	6	**DF22N**
		1 P + N (2)	3	**DF221N**
		2 P	3	**DF222**
		3 P	2	**DF223C** (3)
		3 P + N (2)	1	**DF223NC** (3)

Fuse carriers with "blown fuse" indicators (LED) (1) (4)

Conventional thermal current (Ith)	Size of cartridge fuse or link	Composition	Sold in lots of	Unit reference
A	mm			
25	8.5 x 32	1 P	12	**DF81V**
		1 P + N (2)	6	**DF81NV**
		2 P	6	**DF82V**
		3 P	4	**DF83V**
		3 P + N (2)	3	**DF83NV**
32	10 x 38	1 P	12	**DF101V**
		1 P + N (2)	6	**DF101NV**
		2 P	6	**DF102V**
		3 P	4	**DF103V**
		3 P + N (2)	3	**DF103NV**
50	14 x 51	1 P	6	**DF141V**
		1 P + N (2)	3	**DF141NV**
		2 P	3	**DF142V**
		3 P	2	**DF143VC** (3)
		3 P + N (2)	1	**DF143NVC** (3)
125	22 x 58	1 P	6	**DF221V**
		1 P + N (2)	3	**DF221NV**
		2 P	3	**DF222V**
		3 P	2	**DF223VC** (3)
		3 P + N (2)	1	**DF223NVC** (3)

(1) Each pole can be marked. A clip-in marker holder is provided for this purpose. Clip-in markers type AB1R● or AB1G● can also be used. DF8●●● and DF10●●● are pad lockable fuse carriers.
(2) N: neutral pole fitted with a locked tubular link as standard.
(3) A letter "C" in the reference indicates that the fuse carrier can be fitted with auxiliary early break, "blown fuse" signalling and "fuse present" signalling contacts.
(4) Operational voltage of the blown fuse indicator: 110 V...690 V.

Introduction: page B4/2
Characteristics: page B4/12
Dimensions: page B4/13
Schemes: page B4/13

Product references - DF type



DF14AM●



DF14AP

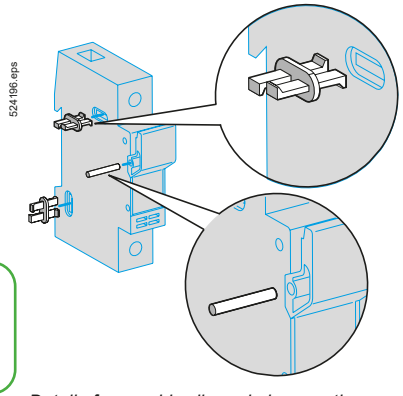

Detail of assembly clip and pin mounting

Accessories

Auxiliary early break and "blown fuse" signalling contacts (1)

Fuse carriers to be equipped	Size of cartridge fuse or link	Number of contacts	Sold in lots of	Unit reference
DF14 (3 P or 3 P + N)	14 x 51	1	1	**DF14AM1**
		2	1	**DF14AM2**
DF22 (3 P or 3 P + N)	22 X 58	1	1	**DF22AM1**
		2	1	**DF22AM2**

Fuse carrier assembly kits (2)

Fuse carriers to be assembled	Size of cartridge fuse or link	Composition	Sold in lots of	Unit reference
DF8	8.5 x 32	1 pin, 2 clips	12	**DF10AP**
DF10	10 x 38			
DF14	14 x 51	1 pin, 3 clips	10	**DF14AP**
DF22	22 x 58	1 pin, 3 clips	10	**DF22AP**

Marking accessories

Description	Composition	Marking	Sold in lots of	Unit reference
Clip-in markers	Strip of 10 identical numbers or letters	0…9	25	**AB1R●** (3)
		A…Z	25	**AB1G●** (3)

Substitution

Fuse carriers

Old range			New range	
Reference	Size of cartridge fuse or link	Composition	Reference w/o indicator	Reference with indicator
DF6AB08	8.5 x 32	1 P	**DF81**	**DF81V**
DF6AB10	10 x 38	1 P	**DF101**	**DF101V**
DF6N10	8.5 x 32 or 10 x 38	1 N	**DF10N**	**–**
GK1CC	8.5 x 32	1 P + N	**DF81N**	**DF81NV**
GK1CD	8.5 x 32	2 P	**DF82**	**DF82V**
GK1CF	8.5 x 32	3 P	**DF83**	**DF83V**
GK1CH	8.5 x 32	3 P + N	**DF83N**	**DF83NV**
GK1DC	10 x 38	1 P + N	**DF101N**	**DF101NV**
GK1DD	10 x 38	2 P	**DF102**	**DF102V**
GK1DF	10 x 38	3 P	**DF103**	**DF103V**
GK1DH	10 x 38	3 P + N	**DF103N**	**DF103NV**
GK1EB	14 x 51	1 P	**DF141**	**DF141V**
GK1EN	14 x 51	1 N	**DF14N**	**–**
GK1EC	14 x 51	1 P + N	**DF141N**	**DF141NV**
GK1ED	14 x 51	2 P	**DF142**	**DF142V**
GK1EF	14 x 51	3 P	**DF143C**	**DF143VC**
GK1EH	14 x 51	3 P + N	**DF143NC**	**DF143NVC**
GK1FB	22 x 58	1 P	**DF221**	**DF221V**
GK1FN	22 x 58	1 N	**DF22N**	**–**
GK1FC	22 x 58	1 P + N	**DF221N**	**DF221NV**
GK1FD	22 x 58	2 P	**DF222**	**DF222V**
GK1FF	22 x 58	3 P	**DF223C**	**DF223VC**
GK1FH	22 x 58	3 P + N	**DF223NC**	**DF223NVC**

Fuse carrier assembly kits

Old range		New range
Reference	Size of cartridge fuse or link	Reference
GK1AP2	8.5 x 32 or 10 x 38	**DF10AP**
GK1AP3	8.5 x 32 or 10 x 38	**DF10AP**
	14 x 51	**DF14AP**
GK1AP4	8.5 x 32 or 10 x 38	**DF10AP**
	22 x 58	**DF22AP**
GK1AP5	14 x 51	**DF14AP**
GK1AP6	14 x 51	**DF14AP**
	22 x 58	**DF22AP**
GK1AP9	22 x 58	**DF22AP**

(1) These auxiliary contacts provide the following functions: early break, "blown fuse" signalling (if the fuse carrier is fitted with striker fuses) and "fuse present" signalling.
(2) 1 pin and 2 clips are required to assemble two DF8 or DF10 fuse carriers together. 1 pin and 3 clips are required to assemble two DF14 or DF22 fuse carriers together.
*(3) When ordering, replace the ● in the reference with the number or letter required. Example: **AB1-R1** or **AB1-GA**.*

Introduction: page B4/2
Characteristics: page B4/12
Dimensions: page B4/13
Schemes: page B4/13

Life Is On Schneider Electric

For protection of control circuits or transformers

References



DFCC1



DFCC3V

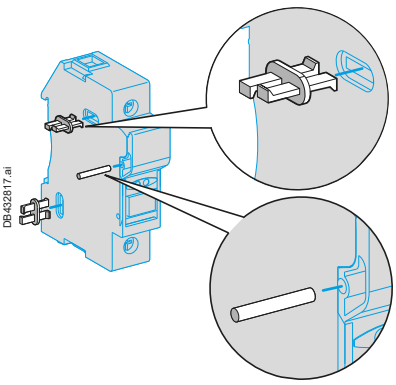

Detail of assembly clip and pin mounting

Fuse carriers (1)

Conventional thermal current (Ith)	Size of cartridge fuse or link	Composition	Sold in lots of	Unit reference
A				
30	Class CC	1 P	12	**DFCC1**
		2 P	12	**DFCC2**
		3 P	6	**DFCC3**

Fuse carriers with "blown fuse" indicators (LED) (1) (2)

Conventional thermal current (Ith)	Size of cartridge fuse or link	Composition	Sold in lots of	Unit reference
A				
30	Class CC	1 P	12	**DFCC1V**
		2 P	6	**DFCC2V**
		3 P	6	**DFCC3V**

Fuse carrier assembly kits (3)

Fuse carriers to be assembled	Size of cartridge fuse or link	Composition	Sold in lots of	Unit reference
DFCC	Class CC	1 pin, 2 clips	12	**DF10AP**

Marking accessories

Description	Composition	Marking	Sold in lots of	Unit reference
Clip-in markers	Strip of 10 identical numbers or letter	0…9	25	**AB1R●** (4)
		A…Z	25	**AB1G●** (4)

(1) Each pole can be marked. A clip-in marker holder is provided for this purpose. Clip-in markers type AB1R● or AB1G● can also be used. DFCC fuse holders are pad lockable.
(2) Operational voltage of the blown fuse indicator: 230 V...690 V.
(3) 1 pin and 2 clips are required to assemble two DFCC fuse carriers together.
*(4) When ordering, replace the p in the reference with the number or letter required. Example: **AB1R1** or **AB1GA**.*

Product references - LS, GK type



LS1D323



LS1D32



GK1EK



LS1D32



+ LA8D324

For protection of motors or transformers

3-pole basic blocks

Connection by spring terminals

Rating	Cartridge fuse size	Number of early break contacts (1)	Single-phase protection device (2)	Reference (3)	Weight kg
25 A	10 x 38	– (4)	Without	**LS1D323**	0.270

Connection by screw clamp terminals or connectors

32 A	10 x 38	– (4)	Without	**LS1D32**	0.300
50 A	14 x 51	1	Without	**GK1EK**	0.430
			With	**GK1EV**	0.470
		2	Without	**GK1ES**	0.470
			With	**GK1EW**	0.510

4-pole basic blocks

Connection by screw clamp terminals or connectors

32 A	10 x 38	– (4)	Without	**LS1D32 + LA8D324** (5)	0.300
50 A	14 x 51	1	Without	**GK1EM**	0.570
			With	**GK1EY**	0.600
		2	Without	**GK1ET**	0.610
			With	**GK1EX**	0.650

Fuse carriers for the North American market

25 and 30 A basic blocks: please consult your Regional Sales Office.

(1) With 1 or 2 early break contacts to be inserted in the contactor control circuit.
(2) Fuse carriers with single-phase protection device must be fitted with striker fuses.
(3) LS1D: clips directly onto a 35 mm ⊥ rail or screw fixing.
GK1: clips directly onto a 35 mm ⊥ rail or Telequick mounting plate.
(4) Addition of add-on contact block, see page B4/7.
(5) Can be mounted on left-hand or right-hand side of the basic block.

Fuse carriers

Product references - for LS, GK type

PG112152.eps



GK1AP05

Add-on contact blocks

Description	For use on	Mounting	Maximum number	Type of contacts	Sold in lots of	Unit reference
Instantaneous auxiliary contacts (early break contacts)	LS1D32	Front	1	N/O + N/C	10	**GVAE11**
				N/O + N/O	10	**GVAE20**
	LS1D323	Front	1	N/O + N/C	10	**GVAE113**
				N/O + N/O	10	**GVAE203**

Operators

For fuse carrier		For mounting on	Reference
Rating	Number of poles		
Side handles			
125 A	3 or 4	Right-hand side	**GK1AP07**
		Left-hand side	**GK1AP08**
Front handles (1)			
32 - 50 - 125 A			Fitted as standard
External handles			
32 A	3 or 4	Right-hand side (IP54)	**LS1D32005** (2)
		Left-hand side (IP54)	**LS1D32006**
50 A	3 or 4	Right-hand side	**GK1AP05**
		Left-hand side	**GK1AP06**

Padlocking devices (3)

For fuse carrier			Reference
Rating	Number of poles	Single-phase protection device	
32 A	3 or 4	Without	integral
50 A	3	Without	**GK1AV07**
		With	**GK1AV08**
	4	Without	**GK1AV08**
		With	**GK1AV09**

Links

Tubular links

For fuse carrier		Sold in lots of	Unit reference
Rating	Number of poles		
32 A	3 or 4	10	**DK1CB92** (4)
50 A	3 or 4	10	**DK1EB92** (5)
125 A	3 or 4	10	**DK1FA92** (5)

(1) Fitted as standard on 32, 50 and 125 A fuse carriers type GK1.
*(2) Reference **LS1D32005** replaces reference DK1FB005.*
*(3) For the 125 A rating, use side handles **GK1AP07** or **GK1AP08**.*
*(4) For use on a neutral circuit, the tubular link can be interlocked with special device **LA8D25906** (sold in lots of 10).*
(5) 50 A fuse carriers type GK1 are fitted with an interlocked neutral tubular link as standard.

Product references - for LS type

Accessories for LS1D32 (screw clamp terminals)

Description	Application	Sold in lots of	Unit reference
Plate for mounting	LS1D32 and contactor LC1D09...D38 with front faces aligned	1	**LAD311**
Combination blocks	Between LS1D32 and contactor LC1K or LP1K	10	**GV2AF01**
	Between LS1D32 and contactor LC1D09...D38	10	**GV2AF3**
	Between LS1D32 mounted on LAD311 and contactor LC1D09...D38	10	**GV2AF4**

Description	Application	Pitch mm	Reference
Sets of 3-pole 63 A busbars	2 tap-offs	45	**GV2G245**
		54	**GV2G254**
		72	**GV2G272**
	3 tap-offs	45	**GV2G345**
		54	**GV2G354**
	4 tap-offs	45	**GV2G445**
		54	**GV2G454**
		72	**GV2G472**
	5 tap-offs	54	**GV2G554**

Description	Application	Sold in lots of	Unit reference
Protective end cover	For unused busbar outlets	5	**GV1G10**
Terminal block Connection from the top	For supply to one or more GV2G busbar sets	1	**GV1G09**
Cover for terminal block	For mounting in modular panels	10	**LA9E07**
Padlocking device	For use with up to 4 padlocks (not supplied) Ø6 mm shank max	1	**GV2V03**

Accessories for LS1D323 (spring terminals)

Description	Application	Reference
Plate for mounting	LS1D323 and contactor LC1D09...D38 with front faces aligned	**LAD311**

Description	Extension by	Number of starters	Reference
Power splitter box, 63 A	LAD32●	2	**LAD322**
		4	**LAD324**

Description	Kit contents	Reference
Assembly and power connection kit for LS1D323 and LC1D093...D323	1 LAD311 plate for mounting LS1D323 2 LAD341 power connection modules - between LS1D323 and power splitter box - between LS1D323 and contactor	**LAD352**

Description	Maximum capacity	Application	Sold in lots of	Unit reference
Upstream terminal block	16 mm²	Power supply to 1 or 2 power splitter boxes	1	**LAD3B1**
Downstream terminal block	16 mm²	Connection of motor cables	1	**LAD331**
Cable end reducer	–	For connection of conductors from 1 to 1.5 mm²	20	**LAD99**

Fuse carriers

Introduction: page B4/2
Characteristics : page B4/16
Dimensions : page B4/17
Schemes : page B4/18

Product references

DF101	DF81N
DF101N	DF81NV
DF101NV	DF81V
DF101PV	DF82
DF101V	DF82V
DF102	DF83
DF102V	DF83N
DF103	DF83NV
DF103N	DF83V
DF103NV	DFCC1
DF103V	DFCC1V
DF10AP	DFCC2
DF10N	DFCC2V
DF141	DFCC3
DF141N	DFCC3V
DF141NV	DK1CB92
DF141V	DK1EB92
DF142	DK1FA92
DF142V	DK1HC92
DF143C	DK1KC92
DF143NC	GK1AP05
DF143NVC	GK1AP06
DF143VC	GK1AP07
DF14AM1	GK1AP08
DF14AM2	GK1AV07
DF14AP	GK1AV08
DF14N	GK1AV09
DF221	GK1EK
DF221N	GK1EM
DF221NV	GK1ES
DF221V	GK1ET
DF222	GK1EV
DF222V	GK1EW
DF223C	GK1EX
DF223NC	GK1EY
DF223NVC	LA8D324
DF223VC	LS1D30
DF22AM1	LS1D32
DF22AM2	LS1D32005
DF22AP	LS1D32006
DF22N	LS1D323
DF81	

This document is current. Click on the product reference to get the most recent availability status (hyperlink to **se.com** product datasheet). If your product variant is no longer available, please consult your distributor or regional sales office.

Technical Data for Designers

Contents

DF type:
> Characteristics B4/12
> Dimensions and schemes B4/13
DF type for the North American market:
> Characteristics B4/14
> Dimensions and schemes B4/15
LS, GK type:
> Characteristics B4/16
> Dimensions..... B4/17
> Schemes B4/18

Characteristics - DF type

Environment characteristics

Fuse carrier type			DF8	DF10	DF14	DF22
Conforming to standards			IEC/EN 60947-3, IEC/HD 60269-2	IEC/EN 60947-3 (1), IEC/HD 60269-2, R22HL2, UL 4248-1 (2), CSA C22.2 No 4248-1 (2)	IEC/EN 60947-3, UL 4248-1, CSA C22.2 No 4248-1	
Product certification			IEC, EAC, CCC, UKCA	IEC, UL, CSA, EAC, DNV-GL, CCC, UKCA	IEC, UL, CSA, EAC, UKCA	
Degree of protection	Conforming to IEC 60529		IP 20			
Ambient air temperature	Storage	**°C**	-40…+80			
	For operation, with derating (1)	**°C**	-20…+60			
Operating positions			± 23° in relation to normal mounting plane			
Flame resistance	Conforming to IEC 60695-2-1	**°C**	960			

Pole characteristics

Fuse size		**mm**	8.5 x 32		10 x 38		14 x 51	22 x 58	
Rated insulation voltage (Ui) with tubular links, a.c. or D.C. supply		**V**	500		690		690	690	
Rated impulse withstand voltage (Uimp)		**kV**	6		6		8	8	
Conventional thermal current (Ith) for ambient air temperature ≤ 20 °C (3)									
	With tubular links	**A**	25		32		50	125	
	With aM cartridge fuses	**A**	25		32		50	125	
	With gG cartridge fuses	**A**	25		32		50	100	
Rated conditional short-circuit current Conforming to IEC 60947-3									
	400 V	**kA**	20		120		120	120	
	500 V	**kA**	–		120		120	120	
	690 V	**kA**	–		–		80	80	
Peak withstand current (dynamic stress) Conforming to IEC 60269-1									
	With tubular links	**kA**	11		15		15	19	
Cabling (number of conductors x c.s.a.)			**Min.**	**Max.**	**Min.**	**Max.**	**Min.**	**Max.**	**Min.**	**Max.**
	Solid cable	**mm²**	1 x 1.5	1 x 16 2 x 6	1 x 1.5	1 x 16 2 x 6	1 x 2.5	1 x 25 2 x 10	1 x 2.5	1 x 35 2 x 25
	Flexible cable without cable end	**mm²**	1 x 1.5	1 x 10 2 x 6	1 x 1.5	1 x 10 2 x 6	1 x 2.5	1 x 25 2 x 10	1 x 2.5	1 x 35 2 x 16
	Flexible cable with cable end	**mm²**	1 x 1.5	1 x 10 2 x 6	1 x 1.5	1 x 10 2 x 6	1 x 2.5	1 x 25 2 x 10	1 x 2.5	1 x 35 2 x 16
Tightening torque		**Nm**	2.2				3.5	4	

Characteristics of early break and signalling contacts DF14 AM and DF22 AM

Rated insulation voltage (Ui) a.c. supply		**V**	250			
Conventional thermal current (Ith) for ambient air temperature ≤ 20 °C (1)		**A**	5			
Rated operational current			**24 V**	**48 V**	**127 V**	**240 V**
	Category AC-15	**A**	4	4	3	2.5
	Category DC-13	**A**	3	1	0.2	0.1
Definition of rated characteristics	Conforming to IEC 60947-5-1		B300			
Low load operating characteristics	Minimum voltage	**V**	10			
	Minimum current	**mA**	30			
Cabling			Faston connectors			

(1) DF101PV excluded.
(2) DF101PV add UL/CSA 4248-19.
(3) For use in an installation with ambient temperature > 20 °C, apply a derating coefficient:

Maximum temperature	**20 °C**	**30 °C**	**40 °C**	**50 °C**	**60 °C**
Max. relative humidity	95 %	90 %	80 %	50 %	50 %
Current derating coefficient	1	0.95	0.9	0.8	0.7

Number of poles (each side)	**1 to 3**	**4 to 6**	**≥7**
Current derating coefficient	1	0.95	0.9

Introduction: page B4/2
References: pages B4/3 and B4/4
Dimensions: page B4/13
Schemes: page B4/13

Dimensions, schemes - DF type

Dimensions

Modular fuse carriers 25 A and 32 A

Mounting on 35 mm ⊔ rail

DF81 and DF81V
DF101 and DF101V
DF10N

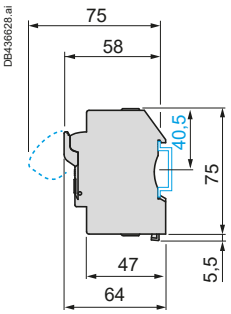

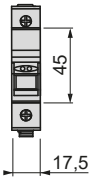

DF81N and DF81NV
DF82 and DF82V
DF101N and DF101NV
DF102 and DF102V

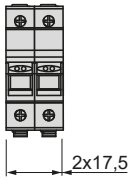

DF83 and DF83V
DF103 and DF103V



DF83N and DF83NV
DF103N and DF103NV



Modular fuse carriers 50 A

Mounting on 35 mm ⊔ rail

DF141 and DF141V
DF14N

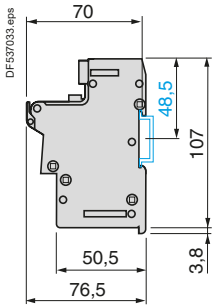

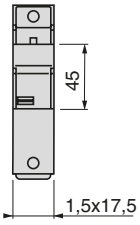

DF141N and DF141NV
DF142 and DF142V

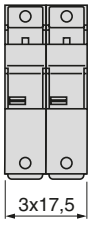

DF143C and DF143VC

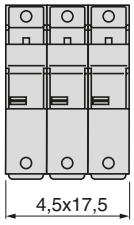

DF143NC and DF143NVC

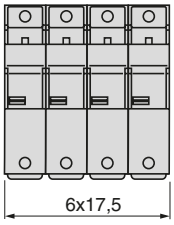

Modular fuse carriers 125 A

Mounting on 35 mm ⊔ rail

DF221 and DF221V
DF22N

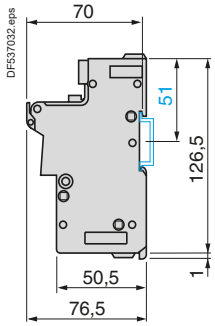

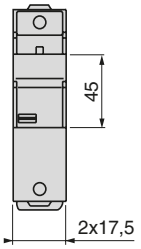

DF221N and DF221NV
DF222 and DF222V

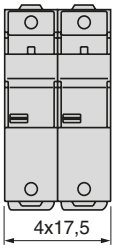

DF223C and DF223VC

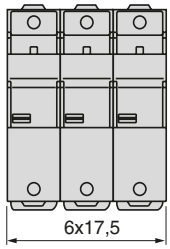

DF223NC and DF223NVC

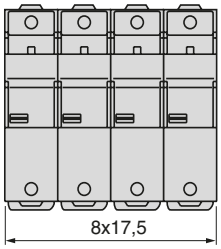

Schemes

Modular fuse carriers

DF•1P

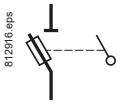

DF•N

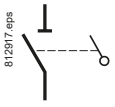

DF•1P + N

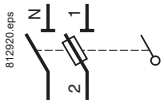

DF•2P

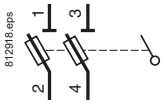

DF•3P

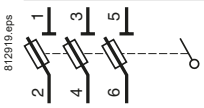

DF•3P + N

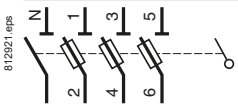

Introduction:
page B4/2

References:
pages B4/3 and B4/4

Characteristics:
page B4/12

Characteristics - DF type

Environment characteristics

Fuse carrier type			DFCC
Conforming to standards			UL 4248-1 & 4, CSA 22-2 No 4248-1 & 4
Product certification			UL, CSA, CCC, UKCA
Degree of protection	Conforming to IEC 60529		IP 20
Ambient air temperature	Storage	**°C**	-40…+80
	For operation, with derating (1)	**°C**	-20…+60
Operating positions	Without derating		±23° in relation to normal vertical mounting plane
Flame resistance	Conforming to IEC 60695-2-1	**°C**	960

Pole characteristics

Fuse carrier type			DFCC	
Fuse size			Class CC	
Rated insulation voltage (Ui) with tubular links, a.c. supply		**V**	600	
Rated impulse withstand voltage (Uimp)		**kV**	6	
Conventional thermal current (Ith) for ambient air temperature ≤ 40 °C (1)				
	With tubular links	**A**	30	
	With aM cartridge fuses	**A**	30	
	With gG cartridge fuses	**A**	30	
Short-circuit current withstand With UL 248-4 Class CC fuses				
	Conforming to UL 512 at 600 V	**kA**	200	
Cabling (number of conductors x c.s.a.)			**Min.**	**Max.**
	Solid cable	**mm²**	1 x 1.5	1 x 16 2 x 6
	Flexible cable without cable end	**mm²**	1 x 1.5	1 x 10 2 x 6
	Flexible cable with cable end	**mm²**	1 x 1.5	1 x 10 2 x 6
Tightening torque		**Nm**	2.2	

(1) For use in an installation with ambient temperature > 20 °C, apply a derating coefficient:

Maximum temperature	**20 °C**	**30 °C**	**40 °C**	**50 °C**	**60 °C**
Max. relative humidity	95 %	90 %	80 %	50 %	50 %
Current derating coefficient	1	0.95	0.9	0.8	0.7

Fuse carriers
Ref.

Dimensions, schemes - DF type

Dimensions

Modular fuse carriers 30 A

Mounting on 35 mm ⊔ rail

DFCC1 and DFCC1V

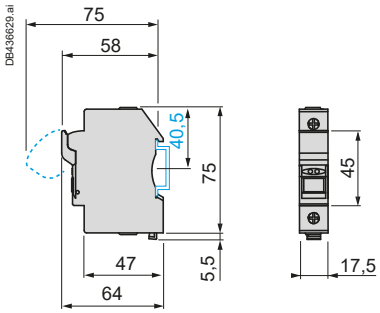

DFCC2 and DFCC2V

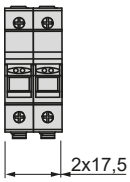

DFCC3 and DFCC3V



Schemes

Modular fuse carriers

DFCC1P

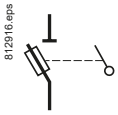

DFCC2P

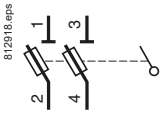

DFCC3P

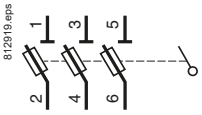

Fuse carriers
Ref.

Characteristics - LS, GK type

Environment

Fuse carrier type			LS1D32	LS1D323	GK1E●	
Conforming to standards	NF EN 60947-3		●		●	
	IEC 60947-3		●		●	
Product certifications			BV, UR		–	
Ambient air temperature for operation with links without derating		**°C**	-50…+70		-50…+70	
Maximum tilt in relation to normal vertical mounting plane			±23°		±23°	

Pole characteristics

Fuse size			10 x 38	10 x 38	14 x 51	
Rated operational voltage with links. a.c. supply		**V**	690	690	690	
Maximum continuous current at ambient temperature ≤ 40 °C [1] (Min. cable Ø/Ie)						
	With tubular links	**mm²/A**	6/32 or 4/25 or 2.5/16	4/25 or 2.5/16	10/50 or 6/40	
	With **aM** fuses	**mm²/A**	6/32 or 4/22 or 2.5/20	4/25 or 2.5/20	10/50 or 6/35	
	With **gG** fuses	**mm²/A**	4/25 or 2.5/20 or 1.5/16	2.5/20 or 1.5/16	10/40 or 6/32	

Early break contact characteristics

Rated operational voltage		**V**	∼ 250. ⎓ 60	∼ 250. ⎓ 60	∼ 500	⎓ 48
Conventional thermal current		**A**	2.5	2.5	6	3

Blow fuse contact characteristics 95/96-98

Rated operational voltage		**V**	–	–	∼ 250	⎓ 24
Conventional thermal current		**A**	–	–	6	3

Cartridge fuse characteristics

Fuse size		10 x 38	10 x 38	14 x 51	
Type **aM**	∼ 400 V **A**	32 [2]	25	50	
	∼ 500 V **A**	20	20	40	
	∼ 660 V **A**	–	–	25	
Type **gG**	∼ 400 V **A**	25 [2]	25	40	
	∼ 500 V **A**	25	25	40	
	∼ 660 V **A**	–	–	25	
Maximum power dissipated by fuse	**W**	3	3	8.5	

Cabling

Connection by screw clamp terminals or connectors

Number and c.s.a. of conductors			Min.	Max.	Min.	Max.	Min.	Max.
	Solid cable	**mm²**	2 x 1	2 x 6	–	–	1 x 2.5	1 x 25
	Flexible cable without cable end	**mm²**	2 x 1.5	2 x 6	–	–	1 x 2.5	1 x 25
	Flexible cable with cable end	**mm²**	2 x 1	2 x 4	–	–	1 x 2.5	1 x 16
Connection			Screw clamp terminals		–	–	Connector	
Tightening torque		**Nm**	1.7		–	–	2	

Connection by spring terminals

Number and c.s.a. of conductors			Min.	Max.	Min.	Max.	Min.	Max.
	Solid cable	**mm²**	–	–	2 x 1 [3]	2 x 4	–	–
	Flexible cable without cable end	**mm²**	–	–	2 x 1.5 [1]	2 x 4	–	–

(1) For use in an installation with ambient temperature > 55 °C, apply a derating coefficient equivalent to $\sqrt{\frac{120 - \text{ambient temperature}}{80}}$

*(2) These values are for fuse carriers mounted side by side with a gap of 10 mm between them or mounted with sets of busbars **GV2●54**. If mounted side by side without a gap, use the following fuse sizes: **aM** fuse: 25 A and **gG** fuse: 20 A.*

*(3) For cross-sections 1 to 1.5 mm², the use of an **LA9D99** cable end reducer is recommended.*

Introduction: page B4/2 | References: pages B4/6 to B4/8 | Dimensions: page B4/17 | Schemes: page B4/18

Dimensions, mounting - LS, GK type

LS1D32

Mounting on rail NSYDPR200BD

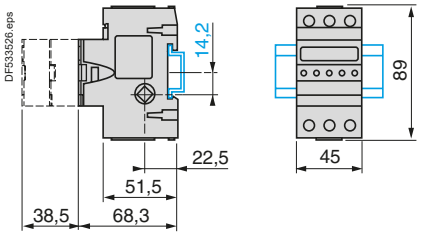

Panel mounting

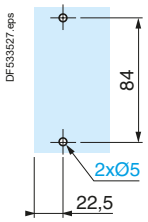

LS1D32 + LA8D324

Mounting on rail NSYDPR200BD

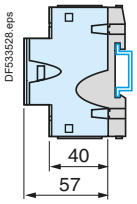

Mounting of 4th pole

On left-hand side

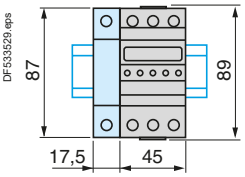

On right-hand side

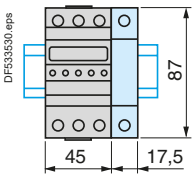

GK1EK, EM, ES, ET, EV, EW, EX, EY

Mounting on rail NSYDPR200BD

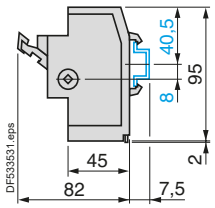

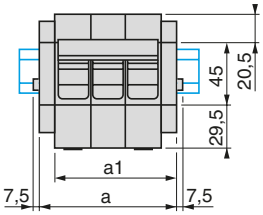

Mounting on pre-slotted plate AM1P

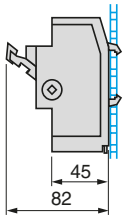

a: with single-phase protection device.
a1: without single-phase protection device.

GK1	a		a1	
	3 P	4 P	3 P	4 P
EK	–	–	88	–
EM	–	–	–	114
ES	–	–	97	–
ET	–	–	–	123
EV	106	–	–	–
EW	115	–	–	–
EX	–	141	–	–
EY	–	132	–	–

GK1E + GK1AV (padlocking device)

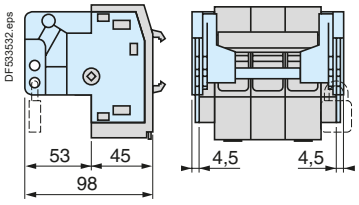

External operator GK1AP05 right-hand, GK1AP06 left-hand

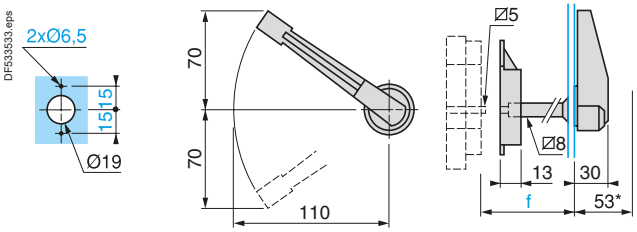

External operator, RH or LH side	f
GK1EK, EM, ES, ET	29…114
GK1EV, EW, EX, EY	29…114

Introduction: page B4/2
References: pages B4/6 to B4/8
Characteristics: page B4/16
Schemes: page B4/18

Schemes - LS, GK type

Fuse carriers without single-phase protection device

3-pole

LS1D32, D323

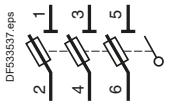

LS1D32, D323 + GVAE11●

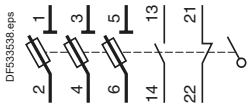

LS1D32, D323 + GVAE20●

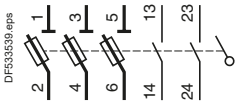

GK1EK

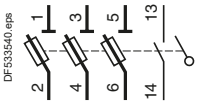

GK1ES

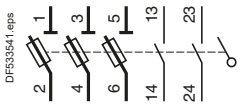

4-pole

LS1D32 + LA8D324

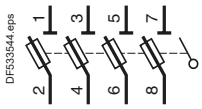

3-pole + Neutral

GK1EM

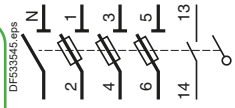

GK1ET

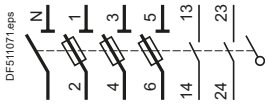

Fuse carriers with single-phase protection device

3-pole

GK1EV

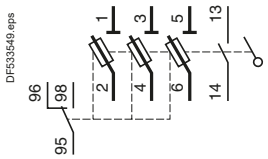

GK1EW

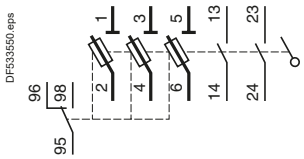

3-pole + Neutral

GK1EY

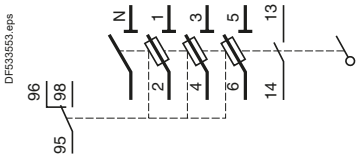

GK1EX

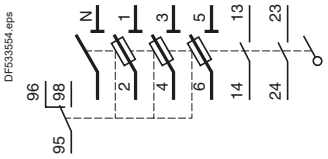

Introduction: page B4/2
References: pages B4/6 to B4/8
Characteristics: page B4/16
Dimensions: page B4/17

TeSys Power
Switch-disconnector fuses

Introduction B5/2

Switch-disconnector fuses

Type of product	Range		Pages
IEC - Switch-disconnector fuses For NFC / DIN fuses	From 32 to 1250 A		B5/4
IEC - Switch-disconnector fuses For BS fuses	From 32 to 1250 A		B5/6
UL - Switch-disconnector fuses For CC / J fuses	From 30 to 800 A		B5/8
NFC - Cartridge fuses Type aM, gG	From 0.16 to 125 A		B5/10
DIN - Cartridge fuses Type aM, gG	From 10 to 1250 A	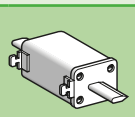	B5/11
Auxiliary contacts for IEC and UL switch-disconnector fuses	From 32 to 1250 A	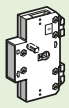	B5/12
Handles	From 32 to 1250 A		B5/13
Other accessories	From 32 to 1250 A		B5/14

Technical Data for Designers B5/17

A customizable functional block

Whatever its rating, the switch-disconnector fuse fits the need: particular position of the handle, triggering of an automatic control before full opening, enhanced protection of terminals...

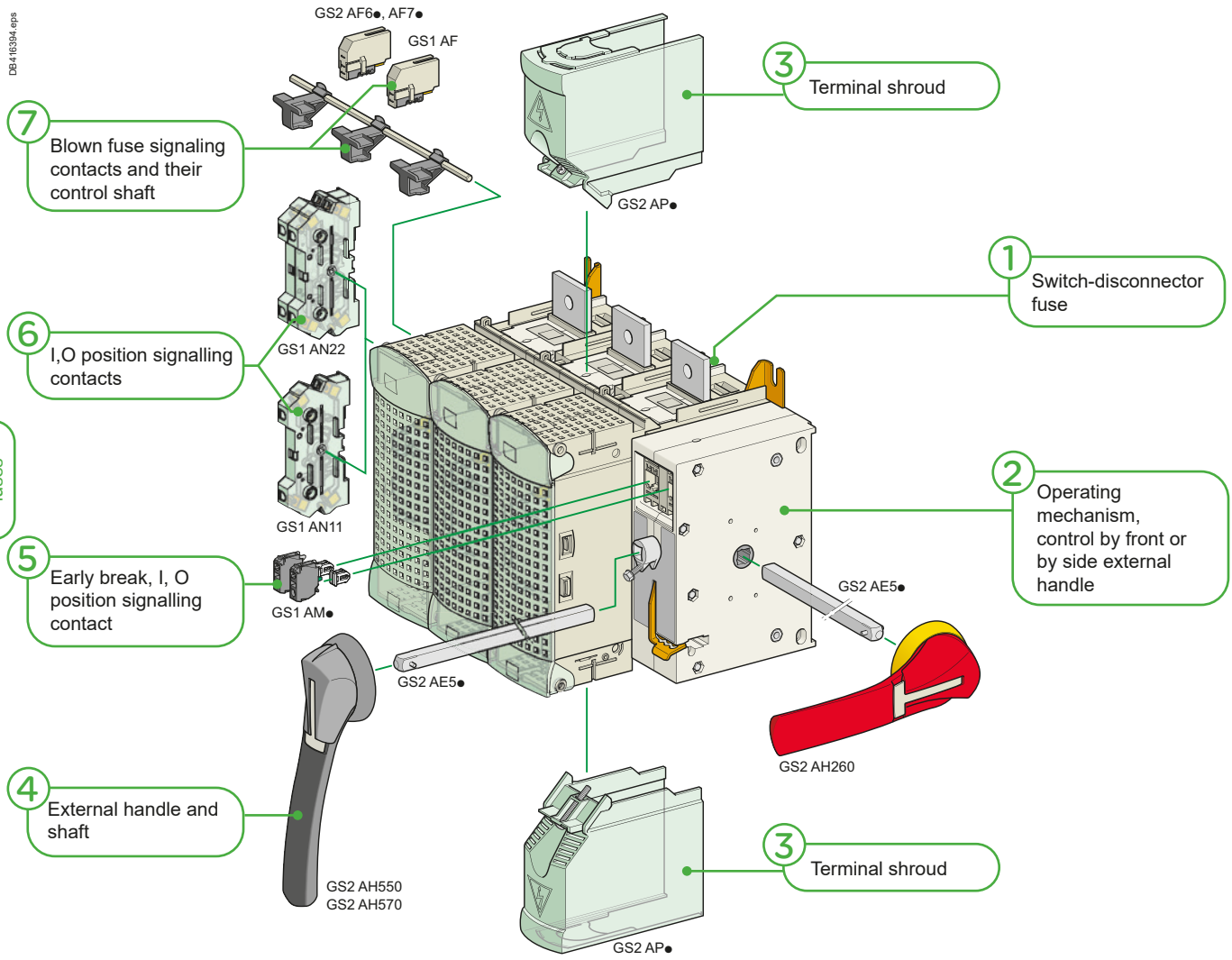

Customizable

GS2630 A switch-disconnector fuse

1 Switch-disconnector fuse
- NFC/DIN or BS fuse compatible
- Enhanced isolation between poles
- On-load making/breaking with double break isolation of the power circuit

2 Operating mechanism
- For one front or side external handle, right or left side
- Cavity for early-break contacts

3 Terminal shrouds
- For use when the switch-disconnector fuse is installed outside an enclosure or when the operating voltage is over 500 V AC

4 Operating handle
- Padlockable in open position

5 GS1AM●●● Early-break signalling contacts
Activated before the poles are opened

6 GS1AN●● Position signalling contacts
- Synchronized with the poles operation

7 GS1AF●● Blown fuse signalling contacts
- A missing fuse is also indicated

Simplicity of the direct operating

The mounting of an operating handle directly on the side of the switch-disconnector fuse is a simple operation.
This handle will be for use by qualified personnel only.
As the mechanical design is simplified, the manoeuvre will be immediately understood by the operator.
Each handle can be padlocked in open position. Locking device for 3 padlocks.

DB416395.eps

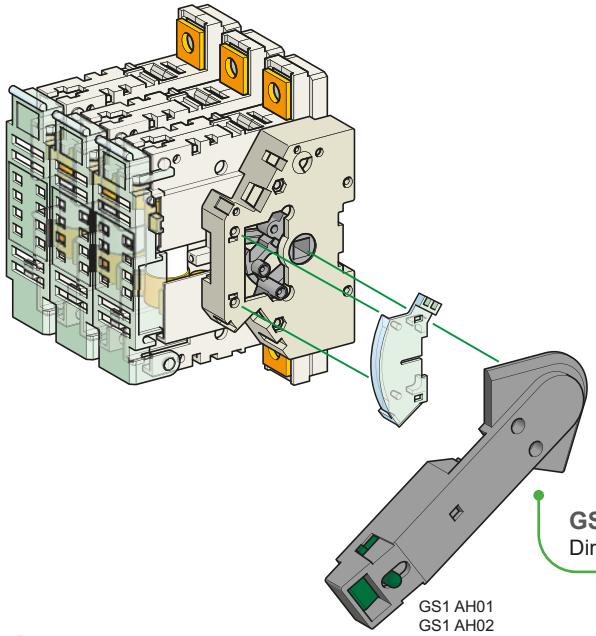

GS1 AH01
GS1 AH02

GS1JD3 - 100 A switch-disconnector fuse
Direct lateral operating

DB416396.eps

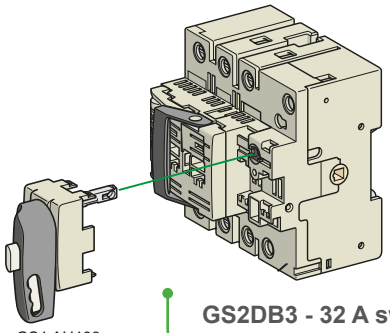

GS1 AH103

GS2DB3 - 32 A switch-disconnector fuse
Direct front operating

Position of the handle, a free choice

Performance remote operating

Located on the front or side panel of an enclosure, the operating handle provide complementary features:
- simple (IP55) or reinforced (IP65) protection against dust
- intermediate "Test" position
- door interlock when the handle is in "Close" position, opening by mean of a special tool is needed for opening.
- optional key-operated handle lock

The handles are available in different lengths. They are chosen according the operating effort which depends on the rating of the switch-disconnector fuse.
The drive shaft can be cut to the ideal length.
The choice of a red and yellow handle (CNOMO standard) will identify an "Emergency Stop handle" among others handles, generally black and gray.

DB416397.eps

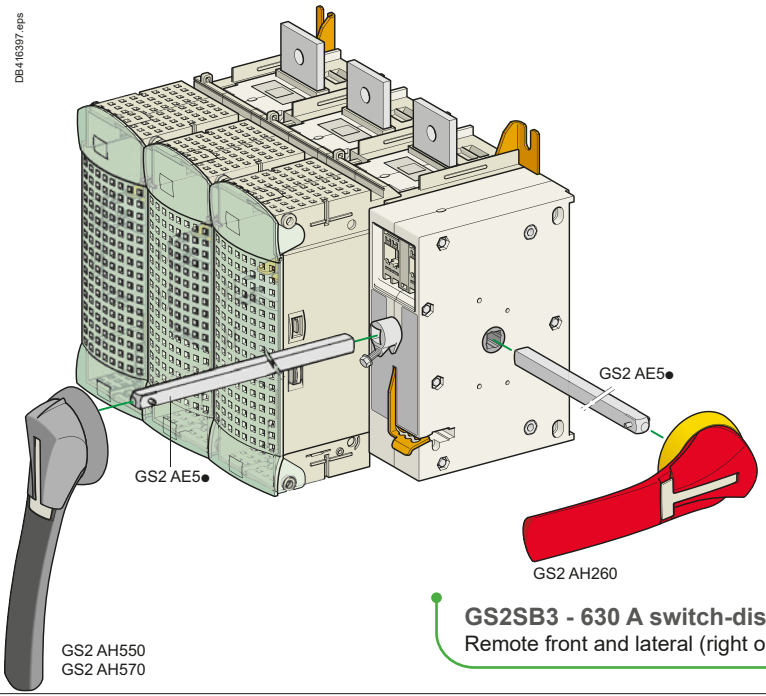

GS2 AH260

GS2 AH550
GS2 AH570

GS2SB3 - 630 A switch-disconnector fuse
Remote front and lateral (right only) operating

IEC - For NFC / DIN fuses - From 32 to 1250 A


GS1DD3


GS1FD3


GS1KD4

Rating A			32		50		63		100		125	
Number of poles			3	3+N	3	4	3	4	3	4	3	4
Fuse size			10 x 38		14 x 51		Size 000		22 x 58		22 x 58	
For direct operators												
Switch-disconnector fuses reference			**GS1DD3**	**GS1DD4**	**GS1FD3**	**GS1FD4**	**GS1GD3**	**GS1GD4**	**GS1JD3**	**GS1JD4**	**GS1KD3**	**GS1KD4**
Handle	Black		**GS1AH103**		**GS1AH01**				**GS1AH02**			
Auxiliary contacts	O/I + Test	1NO + 1NC	-		**GS1AN11**							
		2NO + 2NC	-		**GS1AN22**							
	O/I + early break		**GS1AM111** (1 OF)		**GS1AM1** (1 OF)							
			GS1AM211 (2 OF)		**GS1AM2** (2 OF)							
	Blown fuse		-		**GS1AF1**		-		**GS1AF23**	**GS1AF24**	**GS1AF23**	**GS1AF24**
For external left hand side-mounted operators												
Switch-disconnector fuses reference			**GS1DD3**	**GS1DD4**	**GS2FG3**	**GS2FG4**	**GS2GG3**	**GS2GG4**	**GS2JG3**	**GS2JG4**	**GS2KG3**	**GS2KG4**
Handle	Black/Grey	IP65	**GS2AH310**						**GS2AH330**			
	Red/Yellow	IP65	**GS2AH320**						**GS2AH340**			
Auxiliary contacts	O/I + Test	1NO + 1NC	-		**GS1AN11G**							
		2NO + 2NC	-		**GS1AN22G**							
	O/I + early break	1NO	**GS1AM110**									
		2NO	**GS1AM101**									
	Blown fuse		-		**GS1AF1**		-		**GS1AF23**	**GS1AF24**	**GS1AF23**	**GS1AF24**
For external front-mounted and right-hand side-mounted operators												
Switch-disconnector fuses reference			**GS1DD3**	**GS1DD4**	**GS2F3**	**GS2F4**	**GS2G3**	**GS2G4**	**GS2J3**	**GS2J4**	**GS2K3**	**GS2K4**
Front-mounted handle	Black/Grey	IP55	**GS2AH515**						**GS2AH535**			
	Black/Grey	IP65	**GS2AH510**						**GS2AH530**			
	Red/Yellow	IP65	**GS2AH520**						**GS2AH540**			
Front-mounted handle + Test position	Black/Grey	IP65	**GS2AHT510**						**GS2AHT530**			
	Red/Yellow	IP65	**GS2AHT520**						**GS2AHT540**			
RH side-mounted handle	Black/Grey	IP55	**GS2AH215**						**GS2AH235**			
	Black/Grey	IP65	**GS2AH210**						**GS2AH230**			
	Red/Yellow	IP65	**GS2AH220**						**GS2AH240**			
Auxiliary contacts	O/I + Test	1NO + 1NC	-		**GS1AN11**							
		2NO + 2NC	-		**GS1AN22**							
		1NO + 1NC + test	-		**GS1ANT11**							
		2NO + 2NC + test	-		**GS1ANT22**							
	O/I + Test + early break	1NO	-		**GS1AM110**							
		1NC	-		**GS1AM101**							
	Blown fuse		-		**GS1AF1**		-		**GS1AF23**	**GS1AF24**	**GS1AF23**	**GS1AF24**
Accessories												
Shaft for external handle (mm)		200	**GS2AE82**		**GS2AE22**							
		320	**GS2AE8**		**GS2AE2**							
		400	**GS2AE81**		**GS2AE21**							
Terminal shroud			Integrated						**GS1AP33** (3P), **GS1AP34** (4P)			
Dimensions												
	Direct front-mounted version		page B5/25		page B5/26							
	External front-mounted version		page B5/25		page B5/27							

Handles


PF568668.tif
GS1AH01


PF568669.tif
GS1AH02


PF538656.tif
GS2AH●10
GS2AH●20


PF538655.tif
GS2AH●30
GS2AH●40


PF538654.tif
GS2AH●50
GS2AH●60


PF538653.tif
GS2AH●70
GS2AH●80

See details on handles page B5/13.

Characteristics: pages B5/18 and B5/19
Dimensions: pages B5/25 to B5/29
Schemes: page B5/33

	 *GS1KKD3*		 *GS1LLD4*				 *GS1ND3*									
	125		**160**				**250**		**400**		**630**		**1250**			
	3	4	3	4	3	4	3	4	3	4	3	4	3	4		
	Size 00		Size 00		Size 0		Size 1		Size 2		Size 3		Size 4			
	GS1KKD3	**GS1KKD4**	**GS1LLD3**	**GS1LLD4**	**GS1LD3**	**GS1LD4**	**GS1ND3**	**GS1ND4**	**GS1QQD3**	**GS1QQD4**	**GS2S3**	**GS2S4**	**GS2V3**	**GS2V4**		
	GS1AH02										**GS2AH104**		**GS2AH105**			
	GS1AN11															
	GS1AN22															
	GS1AM1 (1 OF)										**GS1AM110** (1 NO)					
	GS1AM2 (2 OF)										**GS1AM101** (1 NC)					
	-				**GS1AF33**	**GS1AF34**	**GS1AF43**	**GS1AF44**	**GS1AF43**	**GS1AF44**	**GS2AF63**	**GS2AF64**	**GS2AF73**	**GS2AF74**		
	GS2KKG3	**GS2KKG4**	**GS2LLG3**	**GS2LLG4**	**GS2LG3**	**GS2LG4**	**GS2NG3**	**GS2NG4**	**GS2QQG3**	**GS2QQG4**	**GS2SG3**	**GS2SG4**	**GS2VG3**			
	GS2AH330										**GS2AH350**					
	GS2AH340										**GS2AH360**					
	GS1AN11G															
	GS1AN22G															
	GS1AM110															
	GS1AM101															
	-				**GS1AF33**	**GS1AF34**	**GS1AF43**	**GS1AF44**	**GS1AF43**	**GS1AF44**	**GS2AF63**	**GS2AF64**	**GS2AF73**	**GS2AF74**		
	GS2KK3	**GS2KK4**	**GS2LL3**	**GS2LL4**	**GS2L3**	**GS2L4**	**GS2N3**	**GS2N4**	**GS2QQ3**	**GS2QQ4**	**GS2S3**	**GS2S4**	**GS2V3**	**GS2V4**		
	GS2AH535										-					
	GS2AH530										**GS2AH550**		**GS2AH570**			
	GS2AH540										**GS2AH560**		**GS2AH580**			
	GS2AHT530										-					
	GS2AHT540										-					
	GS2AH235										-					
	GS2AH230										**GS2AH250**					
	GS2AH240										**GS2AH260**					
	GS1AN11															
	GS1AN22															
	GS1ANT11										-					
	GS1ANT22										-					
	GS1AM110										-					
	GS1AM101										-					
	-				**GS1AF33**	**GS1AF34**	**GS1AF43**	**GS1AF44**	**GS1AF43**	**GS1AF44**	**GS2AF63**	**GS2AF64**	**GS2AF73**	**GS2AF74**		
	GS2AE22										**GS2AE52**					
	GS2AE2										**GS2AE5**					
	GS2AE21										**GS2AE51**					
	GS1AP33 (3P), **GS1AP34** (4P)						**GS1AP43** (3P), **GS1AP44** (4P)				**GS2AP73**	**GS2AP64**	**GS2AP83**	**GS2AP84**		
	page B5/26										page B5/28					
	page B5/27										page B5/29					

Auxiliary contacts

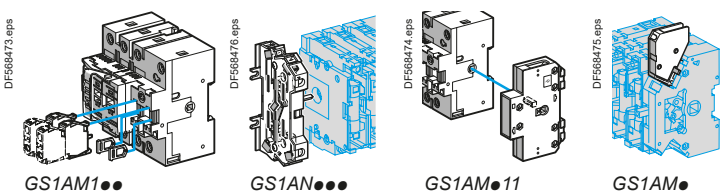

GS1AM1●● *GS1AN●●●* *GS1AM●11* *GS1AM●*

See details on auxiliary contacts, page B5/12.

Maximal number of auxiliary contacts

Switch rating (A)	Standard configuration	With additional bracket	Reference of additional bracket
30...32	4	4	**GS1AD10** (1)
32...400	4	4	**GS2AD20** (2)
200...400	8	8	**GS2AD20** (2)
630...1250	8	-	-

(1) Only compatible with switch disconnector fuses starting by GS1D●●
(2) Only compatible with switch disconnector fuses starting by GS2●●●

Characteristics: pages B5/18 and B5/19
Dimensions: pages B5/25 to B5/29
Schemes: page B5/33

IEC - For BS fuses - From 32 to 1250 A


GS1DDB3


GS2JB3

Rating A			32				63		100		160			
Number of poles			3	3+N	3	4	3	4	3	4	3	4	3	4
Fuse size			A1		A1		A2-A3		A4		A4		B1-B2	
For direct operators														
Switch-disconnector fuses reference			**GS1DDB3**	**GS1DDB4**	-									
Handle	Black		**GS1AH103**		-									
Auxiliary contacts	O/I + Test	1NO + 1NC	-		-									
		2NO + 2NC	-		-									
	O/I + early break		**GS1AM111** (1 OF)		-									
			GS1AM211 (2 OF)		-									
For external front-mounted and right-hand side-mounted operators														
Switch-disconnector fuses reference			**GS1DDB3**	**GS1DDB4**	**GS2DB3**	**GS2DB4**	**GS2GB3**	**GS2GB4**	**GS2JB3**	**GS2JB4**	**GS2LLB3**	**GS2LLB4**	**GS2LB3**	**GS2LB4**
Front-mounted handle	Black/Grey	IP55	**GS2AH515**						**GS2AH535**					
	Black/Grey	IP65	**GS2AH510**						**GS2AH530**					
	Red/Yellow	IP65	**GS2AH520**						**GS2AH540**					
Front-mounted handle + Test position	Black/Grey	IP65	**GS2AHT510**						**GS2AHT530**					
	Red/Yellow	IP65	**GS2AHT520**						**GS2AHT540**					
RH side-mounted handle	Black/Grey	IP55	**GS2AH215**						**GS2AH235**					
	Black/Grey	IP65	**GS2AH210**						**GS2AH230**					
	Red/Yellow	IP65	**GS2AH220**						**GS2AH240**					
Auxiliary contacts	O/I + Test	1NO + 1NC	-		**GS1AN11**									
		2NO + 2NC	-		**GS1AN22**									
		1NO + 1NC + test	-		**GS1ANT11**									
		2NO + 2NC + test	-		**GS1ANT22**									
	O/I + Test + early break	1NO	**GS1AM110** - max 4 contacts											
		1NC	**GS1AM101** - max 4 contacts											
Accessories														
Shaft for external handle (mm)		200	**GS2AE82**		**GS2AE22**									
		320	**GS2AE8**		**GS2AE2**									
		400	**GS2AE81**		**GS2AE21**									
Terminal shroud			Integrated						**GS1AP33** (3P), **GS1AP34** (4P)					
Dimensions														
	Direct front-mounted version		page B5/25				page B5/26							
	External front-mounted version		page B5/25				page B5/27							

Switch-disconnector fuses



GS2MMB3



GS2SB3

	200		250		315		400		630		800		1250	
	3	4	3	4	3	4	3	4	3	4	3	4	3	4
	B1-B2		B1...B3		B1...B3		B1...B4		C1-C2		C1...C3		D1	
	-								-				-	
	-								-				-	
	-								-					
	-								-					
	-								-					
	-								-					
	GS2MMB3	**GS2MMB4**	**GS2NB3**	**GS2NB4**	**GS2PPB3**	**GS2PPB4**	**GS2QQB3**	**GS2QQB4**	**GS2SB3**	**GS2SB4**	**GS2TB3**	**GS2TB4**		**GS2VB4**
	GS2AH535								-					
	GS2AH530								**GS2AH550**				**GS2AH570**	
	GS2AH540								**GS2AH560**				**GS2AH580**	
	GS2AHT530								-					
	GS2AHT540								-					
	GS2AH235								-					
	GS2AH230								**GS2AH250**					
	GS2AH240								**GS2AH260**					
	GS1AN11													
	GS1AN22													
	GS1ANT11								-					
	GS1ANT22								-					
	GS1AM110 - max 8 contacts													
	GS1AM101 - max 8 contacts													
	GS2AE22								**GS2AE52**					
	GS2AE2								**GS2AE5**					
	GS2AE21								**GS2AE51**					
	GS1AP43 (3P), **GS1AP44** (4P)								**GS2AP73** (3P), **GS2AP64** (4P)				**GS2AP83**	**GS2AP84**
	page B5/26								page B5/28					
	page B5/27								page B5/29					

Product references

UL - For CC and J fuses - From 32 to 800 A



GS1DU3



GS2GU3N

Rating			30 Compact		30		60	100	
Number of poles			3		3		3	3	
Fuse size			CC	J	CC	J	J	J	
For direct operators									
Switch-disconnector fuses reference			**GS1DDU3**	**GS1DU3**	**-**				
Handle	Black		**GS1AH106**	-	-				
Auxiliary contacts	O/I + Test	1NO + 1NC	-						
		2NO + 2NC	-						
	O/I + early break	1NO	**GS1AM110 + GS1AD10**		-				
		1NC	**GS1AM101 + GS1AD10**		-				
For external front-mounted operators									
Switch-disconnector fuses reference			**GS1DDU3**	**GS1DU3**	**GS2EEU3**	**GS2EU3N**	**GS2GU3N**	**GS2JU3N**	
Front-mounted handle	Black/Grey	1,3R, 12	**GS2AH110**		**GS2AH130**				
		4, 4X	**GS2AH410**		**GS2AH430**				
	Red/Yellow	1,3R, 12	**GS2AH120**		**GS2AH140**				
		4, 4X	**GS2AH420**		**GS2AH440**				
Front-mounted handle + Test position	Black/Grey	1,3R, 12	**GS2AHT110**		**GS2AHT130**				
		4, 4X	**GS2AHT410**		**GS2AHT430**				
	Red/Yellow	1,3R, 12	**GS2AHT120**		**GS2AHT140**				
		4, 4X	**GS2AHT420**		**GS2AHT440**				
Auxiliary contacts	O/I + Test	1NO + 1NC	-		**GS1AN11**				
		2NO + 2NC	-		**GS1AN22**				
		1NO + 1NC + test	-		**GS1ANT11**				
		2NO + 2NC + test	-		**GS1ANT22**				
	O/I + Test + early break	1NO	**GS1AM110** - max 4 contacts (1)		**GS1AM110** - max 4 contacts (1)				
		1NC	**GS1AM101** - max 4 contacts (1)		**GS1AM101** - max 4 contacts (1)				
Accessories									
Shaft for external handle (mm)		320	**GS2AE8**		**GS2AE2**				
		400	**GS2AE81**		**GS2AE21**				
Terminal shroud			Integrated						
Dimensions									
	Direct front-mounted version		page B5/25				page B5/26		
	External front-mounted version		page B5/25				page B5/27		

(1) 4 more contacts allowed with GS1AD10 additional bracket.

Switch-disconnector fuses

Characteristics: pages B5/22 and B5/23
Dimensions: pages B5/30 to B5/32
Schemes: page B5/33



GS2QU3N



GS2TU3

	200	400	600	800
	3	3	3	3
	J	J	J	J
	-		-	-
	-		-	
	-		-	
	-		-	
	-		-	
	-		-	
	GS2MU3N	**GS2QU3N**	**GS2SU3**	**GS2TU3**
	GS2AH130		-	
	GS2AH430		**GS2AH150**	
	GS2AH140		-	
	GS2AH440		**GS2AH160**	
	GS2AHT130		-	
	GS2AHT430		-	
	GS2AHT140		-	
	GS2AHT440		-	
	GS1AN11			
	GS1AN22			
	GS1ANT11		-	
	GS1ANT22		-	
	GS1AM110 - max 8 contacts [1]		**GS1AM110** - max 8 contacts only	
	GS1AM101 - max 8 contacts [1]		**GS1AM101** - max 8 contacts only	
	GS2AE2		**GS2AE5**	
	GS2AE21		**GS2AE51**	
	GS2AP43	**GS2AP53**	**GS2AP73**	
	page B5/26		page B5/28	
	page B5/27		page B5/29	

Product references

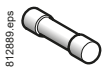

DF2CA●●●
DF2CN●●

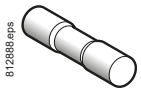

DF2EA●●●
DF2EN●●

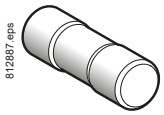

DF2FA●●
DF2FN●●

NFC Cartridge fuses - Type aM / gG - From 0.25 to 125 A

Fuse type	Maximum rated voltage	Rating	Sold in lots of	Fuses without striker	
				Unit reference	
	V ∼	A		aM	gG
Cylindrical 8.5 x 31.5	400	1	10	–	DF2BN0100
		2	10	DF2BA0200	DF2BN0200
		4	10	DF2BA0400	DF2BN0400
		6	10	DF2BA0600	DF2BN0600
		8	10	–	DF2BN0800
		10	10	–	DF2BN1000
		12	10	–	DF2BN1200
		16	10	–	DF2BN1600
		20	10	–	DF2BN2000
Cylindrical 10 x 38	500	0.50	10	DF2CA005	–
		1	10	DF2CA01	–
		2	10	DF2CA02	DF2CN02
		4	10	DF2CA04	DF2CN04
		6	10	DF2CA06	DF2CN06
		8	10	DF2CA08	DF2CN08
		10	10	DF2CA10	DF2CN10
		12	10	DF2CA12	DF2CN12
		16	10	DF2CA16	DF2CN16
		20	10	–	DF2CN20
	400	20	10	DF2CA20	–
		25	10	DF2CA25	DF2CN25
		32	10	DF2CA32	DF2CN32
Cylindrical 14 x 51	690	0.25	10	DF2EA002	–
		0.50	10	DF2EA005	–
	500	16	10	DF2EA16	–
		20	10	DF2EA20	–
		25	10	DF2EA25	DF2EN25
		32	10	DF2EA32	DF2EN32
		40	10	DF2EA40	DF2EN40
	400	50	10	DF2EA50	DF2EN50
Cylindrical 22 x 58	690	10	10	–	DF2FN10
		20	10	–	DF2FN20
		25	10	–	DF2FN25
		32	10	–	DF2FN32
		40	10	DF2FA40	DF2FN40
		50	10	DF2FA50	DF2FN50
	500	63	10	DF2FA63	DF2FN63
		80	10	DF2FA80	DF2FN80
		100	10	DF2FA100	DF2FN100
	400	125	10	DF2FA125	–

For protection of equipment with current peaks
For protection of circuits without significant current peaks

Product references

PB121654.eps



DF2HA1161

DIN Cartridge fuses - Type aM /gG - From 10 to 1250 A

Fuse type	Maximum rated voltage	Rating	Sold in lots of		Fuses without striker		Fuses with striker	
					Unit reference		Unit reference	
	V ~	A	aM	gG	aM	gG	aM	gG
Blade size 00	690	100	3	10	–	DF2FGN100	–	–
		125	3	10	–	DF2FGN125	–	–
	500	160	-	10	–	DF2FGN160	–	–
Blade size 1	690	160	3	3	DF2HA1161	–	–	–
		200	3	3	DF2HA1201	DF2HN1201	–	–
		250	3	-	DF2HA1251	–	–	–
	500	250	-	3	–	DF2HN1251	–	–

For protection of equipment with current peaks
For protection of circuits without significant current peaks

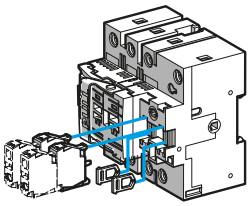

GS1AM1●●

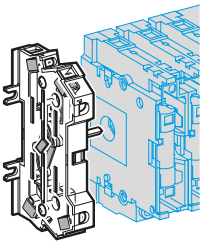

GS1AN●●●

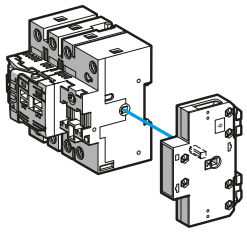

GS1AM●11

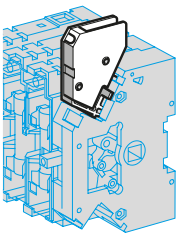

GS1AF●●

Auxiliary contacts for IEC and UL switch-disconnector fuses

Auxiliary early break and/or O, I and Test position signalling contacts (1) (2) (3)

Switch rating		Contact type	Type of operator	Rated operating current Ie (A)		Reference
A (CEI)	**A** (UL)			< 24 V DC	< 240 V AC	
32…1250	30 Compact 30...800	1 N/O	External, front or side-mounted (4)	2.8	3	**GS1AM110**
		1 N/C	External, front or side-mounted (4)	2.8	3	**GS1AM101**

Auxiliary O, I and Test position signalling contacts (3) (5)

Switch rating		Contact type	Type of operator	Rated operating current Ie (A)		Reference
A (CEI)	**A** (UL)			< 24 V DC	< 240 V AC	
Auxiliary O and I position signalling contacts						
50…1250	30...800	1 N/C + 1 N/O	External, front or RH side-mounted Direct	–	10	**GS1AN11**
			External, LH side	–	10	**GS1AN11G***
		2 N/C + 2 N/O	External, front or RH side-mounted Direct	–	10	**GS1AN22**
			External, LH side	–	10	**GS1AN22G***
Auxiliary O, I and Test position signalling contacts (3)						
50…400	30...400	1 N/C + 1 N/O	External, front side-mounted	–	10	**GS1ANT11**
		2 N/C + 2 N/O	External, front side-mounted	–	10	**GS1ANT22**

Auxiliary early break O and I position signalling contacts

Switch rating	Contact type	Type of operator	Rated operating current Ie (A)		Reference
A (CEI)			< 24 V DC	< 240 V AC	
32	1 C/O	–	12	4	**GS1AM111***
	2 C/O	–	12	4	**GS1AM211***
50…400	1 C/O	Direct, RH side	12	4	**GS1AM1***
	2 C/O	Direct, RH side	12	4	**GS1AM2***

Auxiliary "blown fuse" signalling contacts for use with NF C and DIN fuses (6)

Contact type	Switch rating	Fuse size	Number of poles	Rated operating current Ie (A)		Reference
	A (CEI)			< 24 V DC	< 240 V AC	
1st C/O	50	14 x 51	3 or 4	12	4	**GS1AF1***
	100 and 125	22 x 58	3	12	4	**GS1AF23***
			4	12	4	**GS1AF24***
	160	Size 0	3	12	4	**GS1AF33***
			4	12	4	**GS1AF34***
	250 and 400	Size 1 and Size 2	3	12	4	**GS1AF43***
			4	12	4	**GS1AF44***
	630	Size 3	3	12	4	**GS2AF63***
			4	12	4	**GS2AF64***
	1250	Size 4	3	12	4	**GS2AF73***
			4	12	4	**GS2AF74***
2nd C/O	50…1250	–	3 or 4	12	4	**GS1AF***

(*) Not for UL switch-disconnector.
*(1) **For 32 A (CEI), 30 (UL) switch-disconnector fuses, these auxiliary contacts allow:***
- early break and O and I position signalling,
- O, I and Test position signalling,
- O and I position signalling,
- Test position signalling.
For 50 to 400 A (CEI), 30-400 A (UL) switch-disconnector fuses, they allow:
- early break,
- O, I and Test position signalling,
- O and I position signalling,
- Test position signalling.
For 630 and 1250 A (CEI), 630 and 800 A (UL) switch-disconnector fuses, they allow:
- early break and O and I position signalling,

(2) Maximum number of auxiliary contacts:

Switch rating			Standard	With additional bracket	Reference of additional bracket
A (CEI)	**A** (UL)				
32 (7)	30 Compact	CC	4	4 + 4	**GS1AD10**
		J	2	2 + 4	**GS1AD10**
32 (8)…160	30...100		4	4 + 4	**GS2AD20**
200…400	200 and 400		8	8 + 4	**GS2AD20**
630…1250	600 and 800		8	8	**–**

*(3) The Test position allows testing of the control circuits off-load. Auxiliary contacts **GS1AM110**, **GS1AM101** and **GS1ANT●●** only allow the text function with external handles **GS2AHT●●●**.*
(4) These auxiliary contacts can also be used with 630, 800 and 1250 A switch-disconnector fuses fitted with a direct front-mounted operator.
(5) Reversible add-on attachments for converting an N/C contact to an N/O contact and vice versa.
(6) For striker fuses (BS fuses are not available with striker).
*(7) For **GS1DDB3** fuse switch disconnector only.*
*(8) For 32 A: for fuse switch disconnector **GS2DB3** only.*

Characteristics: page B5/24
Dimensions: page B5/33
Schemes: page B5/33

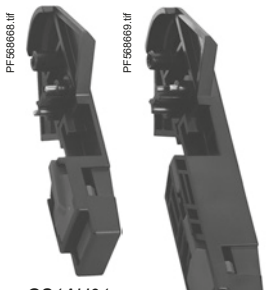
PF568668.tif

GS1AH01

PF568669.tif

GS1AH02


PF538656.tif

GS2AH●10
GS2AH●20

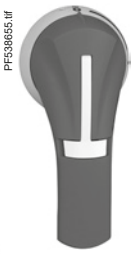
PF538655.tif

GS2AH●30
GS2AH●40

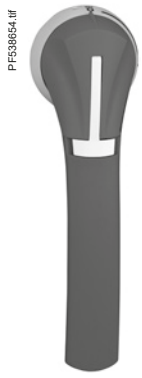
PF538654.tif

GS2AH●50
GS2AH●60


PF538653.tif

GS2AH●70
GS2AH●80

Handles for IEC and UL switch-disconnector fuses

Handles for direct operators

Switch rating A (CEI)	Switch rating A (UL)	Type of operator	Handle colour	Reference
Handles for direct operators, padlockable				
-	30 Compact	Front-mounted	Black	**GS2AH106**
32	-	Front	Black	**GS1AH103**
50 and 63	-	RH side	Black	**GS1AH01**
100…400	-	RH side	Black	**GS1AH02**
-	600 and 800	Front-mounted	Black	**GS2AH107**
630 and 800	-	Front	Black	**GS2AH104**
1250	-	Front	Black	**GS2AH105**

Handles for external operator

Switch rating A (CEI)	Switch rating A (UL)	Handle colour	Degree of protection	Protection index Nema	Reference
Handles for front-mounted external operators, padlockable and lockable in position O (1) Door interlock in I position (2)					
32…63	-	Black/Grey	IP 65	–	**GS2AH510**
			IP55	–	**GS2AH515**
		Red/Yellow	IP 65	–	**GS2AH520**
100…400	-	Black/Grey	IP 65	–	**GS2AH530**
			IP55	–	**GS2AH535**
		Red/Yellow	IP 65	–	**GS2AH540**
630 and 800	-	Black/Grey	IP65	–	**GS2AH550**
		Red/Yellow	IP65	–	**GS2AH560**
1250	-	Black/Grey	IP65	–	**GS2AH570**
		Red/Yellow	IP65	–	**GS2AH580**
-	30 Compact	Black/Grey	–	1, 3R, 12	**GS2AH110**
		Red/Yellow	–	1, 3R, 12	**GS2AH120**
		Black/Grey	–	1, 3R, 4, 4X, 12	**GS2AH410**
		Red/Yellow	–	1, 3R, 4, 4X, 12	**GS2AH420**
-	30…400	Black/Grey	–	1, 3R, 12	**GS2AH130**
		Red/Yellow	–	1, 3R, 12	**GS2AH140**
		Black/Grey	–	1, 3R, 4, 4X, 12	**GS2AH430**
		Red/Yellow	–	1, 3R, 4, 4X, 12	**GS2AH440**
-	600 and 800	Black/Grey	–	1, 3R, 12	**GS2AH150**
		Red/Yellow	–	1, 3R, 12	**GS2AH160**
Handles for front-mounted external operators with test facility (3), padlockable and lockable in "O" position (1). Door interlock in "I" position (2)					
32…63	-	Black/Grey	IP 65	–	**GS2AHT510**
		Red/Yellow	IP65	–	**GS2AHT520**
100…400	-	Black/Grey	IP65	–	**GS2AHT530**
		Red/Yellow	IP65	–	**GS2AHT540**
-	30 Compact	Black/Grey	–	1, 3R, 12	**GS2AHT110**
		Red/Yellow	–	1, 3R, 12	**GS2AHT120**
		Black/Grey	–	1, 3R, 4, 4X, 12	**GS2AHT410**
		Red/Yellow	–	1, 3R, 4, 4X, 12	**GS2AHT420**
-	30…400	Black/Grey	–	1, 3R, 12	**GS2AHT130**
		Red/Yellow	–	1, 3R, 12	**GS2AHT140**
		Black/Grey	–	1, 3R, 4, 4X, 12	**GS2AHT430**
		Red/Yellow	–	1, 3R, 4, 4X, 12	**GS2AHT440**
Handles for external right-hand side-mounted operators, padockable and lockable in "O" position (1)					
32…63	-	Black/Grey	IP 65	–	**GS2AH210**
			IP55	–	**GS2AH215**
		Red/Yellow	IP65	–	**GS2AH220**
100…400	-	Black/Grey	IP65	–	**GS2AH230**
			IP55	–	**GS2AH235**
		Red/Yellow	IP65	–	**GS2AH240**
630…1250	-	Black/Grey	IP65	–	**GS2AH250**
		Red/Yellow	IP65	–	**GS2AH260**
Handles for external left-hand side-mounted operators, padockable and lockable in "O" position (1)					
32…63	-	Black/Grey	IP 65	–	**GS2AH310**
		Red/Yellow	IP65	–	**GS2AH320**
100…400	-	Black/Grey	IP65	–	**GS2AH330**
		Red/Yellow	IP65	–	**GS2AH340**
630…1250	-	Black/Grey	IP65	–	**GS2AH350**
		Red/Yellow	IP65	–	**GS2AH360**

*(1) Lockable with device **GS2AX1,** to be ordered separately.*
(2) Door interlock override by means of a tool.
*(3) The Test facility allows testing of the control circuits off-load, by using auxiliary contacts **GS1AM110**, **GS1AM101** or **GS1ANT●●**. In the "Test" position, the enclosure door can be opened.*

Dimensions:
pages B5/25 to B5/32

PB121455.eps



GS2AE5

PB121456.eps



GS2AE2 - GS2AE21

PB121457.tif



GS2AE8 - GS2AE81

Accessories for IEC and UL switch-disconnector fuses

Shafts for external operators

Switch rating A (CEI)	A (UL)	Shaft length mm	Shaft cross section mm	Reference
32	30 Compact	200	5 x 5	**GS2AE82**
		320	5 x 5	**GS2AE8**
		400	5 x 5	**GS2AE81**
50…400	30...400	200	10 x 10	**GS2AE22**
		320	10 x 10	**GS2AE2**
		400	10 x 10	**GS2AE21**
630…1250	600 and 800	200	12 x 12	**GS2AE52**
		320	12 x 12	**GS2AE5**
		40	12 x 12	**GS2AE51**

Terminal protection shrouds for upstream or downstream connector plates

Switch rating A (CEI)	A (UL)	Number of poles	Reference
50 and 63	30 Compact, 30...60 (3P)	3 or 4	(1)
100…160	100	3	**GS1AP33**
	–	4	**GS1AP34**
200…400	200	3	**GS1AP43**
	–	4	**GS1AP44**
–	400	3	**GS1APU53**
630…800	600 and 800	3	**GS2AP73**
	–	4	**GS2AP64**
1250	–	3	**GS2AP83**
		4	**GS2AP84**

Devices for locking fuse covers in "I" position (2)

Switch rating A	Fuse size	Number of poles	Reference
50	14 x 51	3 or 4	(3)
63	Size 00C	3 or 4	**GS1AV1**
100…160	22 x 58, Size 00	3 or 4	**GS1AV2**
160	Size 0	3	**GS1AV33**
250	Size 1	3	**GS1AV53**
		4	**GS1AV54**
400	Size 2	3	**GS1AV73**
		4	**GS1AV74**

Cage terminals for connection of bare cables (without lug)

Switch rating A	Number of poles	Reference
50 and 63	3 or 4	(4)
100…160	3	**GS1AW33**
	4	**GS1AW34**
200…250	3	**GS1AW43**
	4	**GS1AW44**

External handle locking device

Switch rating A	Description	Reference
32…1250	Device for RONIS EL11AP keylock (lock to be ordered separately).	**GS2AX1**

Flat mounting kit

Switch rating A	Description	Reference
50…400	The kit, for use with a front-mounted external handle, includes: ■ a 200 mm shaft, cross section 10 x 10 mm, ■ an adapter plate	**GS2ADL2**

(1) For these ratings, the switch-disconnector fuses are fitted with terminal covers as standard.
(2) For NF C and DIN switch-disconnector fuses fitted with right-hand mounted direct operator.
(3) For this rating, switch-disconnector fuses are fitted with a cover locking device as standard.
(4) For these ratings, switch-disconnector fuses are fitted with cage terminals as standard.

Product references

GS1AD010
GS1AD10
GS1AE6
GS1AE7
GS1AF
GS1AF1
GS1AF23
GS1AF24
GS1AF33
GS1AF34
GS1AF43
GS1AF44
GS1AH01
GS1AH02
GS1AH101
GS1AH102
GS1AH103
GS1AH110
GS1AH130
GS1AH160
GS1AH220
GS1AH440
GS1AM1
GS1AM101
GS1AM110
GS1AM111
GS1AM2
GS1AM211
GS1AN11
GS1AN11G
GS1AN22
GS1AN22G
GS1ANT11
GS1ANT22
GS1AP33
GS1AP34
GS1AP43
GS1AP44
GS1AP63
GS1AP83
GS1AV1
GS1AV2
GS1AV33
GS1AV54
GS1AV73
GS1AW303
GS1AW306
GS1AW33
GS1AW34
GS1AW403
GS1AW406
GS1AW43
GS1AW44
GS1AW503
GS1AW506
GS1AW603
GS1AW606
GS1AW903
GS1DD3
GS1DD4
GS1DDB3
GS1DDB4
GS1DDU3
GS1DU3
GS1FD3
GS1FD4
GS1GD3
GS1GD4
GS1JD3
GS1JD4
GS1KD3
GS1KD4
GS1KKD3
GS1KKD4
GS1LD3
GS1LD4
GS1LLD3
GS1LLD4
GS1ND3
GS1ND4
GS1QQD3
GS1QQD4
GS2AD030N
GS2AD040N
GS2AD20
GS2ADL2
GS2AE2
GS2AE21
GS2AE22
GS2AE23
GS2AE5
GS2AE51
GS2AE52
GS2AE61
GS2AE8
GS2AE81
GS2AE82
GS2AEH12
GS2AESB
GS2AF63
GS2AF64
GS2AF73
GS2AF74
GS2AH100TO200
GS2AH104
GS2AH106
GS2AH110
GS2AH120
GS2AH130
GS2AH140
GS2AH150
GS2AH160
GS2AH170
GS2AH180
GS2AH210
GS2AH215
GS2AH220
GS2AH230
GS2AH235
GS2AH240
GS2AH250
GS2AH260
GS2AH310
GS2AH320
GS2AH330
GS2AH340
GS2AH350
GS2AH360
GS2AH36F
GS2AH410
GS2AH420
GS2AH430
GS2AH440
GS2AH460F
GS2AH510
GS2AH515
GS2AH520
GS2AH530
GS2AH535
GS2AH540
GS2AH550
GS2AH560
GS2AH570
GS2AH580
GS2AH60F
GS2AHT110
GS2AHT120
GS2AHT130
GS2AHT140
GS2AHT410
GS2AHT420
GS2AHT430
GS2AHT440
GS2AHT510
GS2AHT520
GS2AHT530
GS2AHT540
GS2AP43
GS2AP53
GS2AP64
GS2AP73
GS2AP83
GS2AP84
GS2AX1
GS2DB3
GS2DB4
GS2EEU3
GS2EU3N
GS2F3
GS2F4
GS2FG3
GS2FG4
GS2G3
GS2G4
GS2GB3
GS2GB4
GS2GG3
GS2GG4
GS2GU3N
GS2J3
GS2J4
GS2JB3
GS2JB4
GS2JG3
GS2JG4
GS2JU3N
GS2K3
GS2K4
GS2KG3
GS2KG4
GS2KK3
GS2KK4
GS2KKG3
GS2KKG4
GS2L3
GS2L4
GS2LB3
GS2LB4
GS2LG3
GS2LG4
GS2LL3
GS2LL4
GS2LLB3
GS2LLB4
GS2LLG3
GS2LLG4
GS2MLU3N
GS2MMB3
GS2MMB4
GS2MU3N
GS2N3
GS2N4
GS2NB3
GS2NB4
GS2NG3
GS2NG4
GS2PPB3
GS2PPB4
GS2QQ3
GS2QQ4
GS2QQB3
GS2QQB4
GS2QQG3
GS2QQG4
GS2QU3N
GS2S3
GS2S4
GS2SB3
GS2SB4
GS2SG3
GS2SG4
GS2SU3
GS2TB3
GS2TB4
GS2TU3
GS2V3
GS2V4
GS2VG3
LC1BL

This document is current. Click on the product reference to get the most recent availability status (hyperlink to **se.com** product datasheet). If your product variant is no longer available, please consult your distributor or regional sales office.

Technical Data for Designers

Contents

Characteristics:
> switch-disconnector fuses.... B5/18 to B5/23
> auxiliary contacts B5/24
Dimensions ..... B5/25 to B5/33
Schemes.....B5/33

IEC - For NFC / DIN fuses - From 32 to 1250 A

Switch-disconnector-fuse characteristics

Type				GS1DD	GS●F	GS●G	GS●J
Environment							
Conforming to standards	Switch-disconnector fuses			IEC 60947-3			
	Fuses			IEC 60269-1 and 2			
Product certifications				ASEFA/LOVAG, LROS, UKCA			
Degree of protection conforming to IEC 60529	On front panel with terminal covers			IP 20			
Ambient air temperature around the device	Storage		°C	-40…+80			
	Operation		°C	-20…+70			
Flame resistance conforming to IEC 60695-2-1	Body		°C	960	960		
	Fuse cover		°C	–	850		
Pole characteristics							
Conventional thermal current (Ith) for ambient temperature ≤ 40 °C			A	32	50	63	100
Fuse size				10 x 38	14 x 51	T00C	22 x 58
Rated insulation voltage (Ui)			V	800	750	750	750
Rated impulse withstand voltage (Uimp)			kV	8	8	8	8
Rated operational current (Ie)	Cat. AC-23A/B (1)	∼ 400 V	A	32	50	63	100
		∼ 500 V	A	32	50	63	100
		∼ 690 V	A	32	50	63	100 (3)
	Cat. DC-23A/B (1)	⎓ 440 V (2)	A	20	40	40	100
Rated operational power	Cat. AC-23A/B (1)	∼ 400 V	kW	15	25	30	51
		∼ 500 V	kW	18.5	33	40	63
		∼ 690 V	kW	25	45	55	90
Rated conditional short-circuit current	I rms at ∼ 400 V with protection by gG (gl) fuses		kA	100	100	100	100
	Rating of associated fuses		A	32	50	63	100
Peak value of permissible current (dynamic short-circuit withstand)	Conforming to IEC 60269-1	∼ 400 V	kA	5.5	7.6	10.6	20
Rated making capacity	I rms at 400 V Cat. AC-23B		A	320	500	630	1000
Rated breaking capacity	I rms at 400 V Cat. AC-23B		A	256	400	500	800
Mechanical durability	Number of operating cycles			20000	10000	10000	10000
Electrical durability	Number of operating cycles cat. AC/DC-23A/B (1)			1500/300	1500/300	1500/300	1500/300
Cabling	Cable (c.s.a. min/max)		mm²	2.5/16	6/25	10/25	25/95
	Bars (max width)		mm	–	–	–	20
Tightening torque			N.m	3	3.2	3.2	12

(1) Category "A": frequent operating cycles, category "B": infrequent operating cycles.
(2) 2 poles in series per phase.
(3) With terminal covers.
(4) Poles not juxtaposed.

References:
pages B5/4 and B5/5

Dimensions:
pages B5/25 to B5/29

Schemes:
page B5/33

Life Is On Schneider Electric

	GS●K	GS●KK	GS●LL	GS●L	GS●N	GS●QQ	GS2S	GS2V
	IEC 60947-3							
	IEC 60269-1 and 2							
	ASEFA/LOVAG, LROS, UKCA							
	IP 20							
	-40…+80							
	-20…+70							
	960							
	850							
	125	125	160	160	250	400	630	1250
	22 x 58	T00	T00	T0	T1	T2	T3	T4
	750	750	750	750	750	800	1000	1000
	8	8	8	8	8	8	12	12
	125	125	160	160	250	400	630	1000
	125	125	160	160	250	315	500	800
	100 (3)	100 (3)	125 (3)	125 (3)	250 (3)	250/315	315/400	630
	100	100	125	125	200	200/315 (4)	400/630 (4)	1000
	63	63	80	80	132	220	355	560
	90	90	110	110	160	220	355	560
	80	80	110	110	220	220/295	295/400	400/475
	100	100	100 (50)	100	100	50	100	100
	125	125	125 (160)	160	250	400	630	1250
	20	20	22.7	20	32.5	40	70	90
	1250	1250	1600	1600	2500	4000	6300	10 000
	1000	1000	1280	1280	2000	3200	5040	8000
	10000	10000	10000	10000	10000	10000	8000	5000
	1000/200	1000/200	1000/200	1000/200	1000/200	1000/200	1000/200	500/100
	35/95	35/95	50/95	50/95	95/240	185/240	2 x 150 / 2 x 300	- / 4 x 185
	20	20	20	20	32	45	63	80
	12	12	12	12	25	25	44	44

References:
pages B5/4 and B5/5

Dimensions:
pages B5/25 to B5/29

Schemes:
page B5/33

IEC - For BS fuses - From 32 to 1250 A

Switch-disconnector-fuse characteristics

Type				GS1DDB	GS2DB	GS2GB	GS2JB
Environment							
Conforming to standards	Switch-disconnector fuses			IEC 60947-3			
	Fuses			IEC 60269-1 and 2			
Product certifications				ASEFA/LOVAG, LROS, UKCA			
Degree of protection conforming to IEC 60529	On Front panel, with terminal covers			IP 20			
Ambient air temperature around the device	Storage		°C	-40…+80			
	Operation		°C	-20…+70			
Flame resistance conforming to IEC 60695-2-1	Body		°C	960			
	Fuse cover		°C	–		850	
Pole characteristics							
Conventional thermal current (Ith) for ambient temperature ⩽ 40 °C			A	32	32	63	100
Fuse size				A1	A1	A2-A3	A4 Ø ⩽ 31 mm
Rated insulation voltage (Ui)			V	800	750	750	750
Rated impulse withstand voltage (Uimp)			kV	8	8	8	8
Rated operational current (Ie)	Cat. AC-23A/B (1)	∼ 400 V	A	32	32	63	100
		∼ 500 V	A	32	32	63	100
		∼ 690 V	A	32	32	63	100 (4)
	Cat. DC-23A/B (1)	⎓ 440 V (2)	A	20	20	40	100
Rated operational power	Cat. AC-23A/B (1)	∼ 400 V	kW	15	15	30	51
		∼ 500 V	kW	18.5	18.5	40	63
		∼ 690 V	kW	25	25	55	90
Rated conditional short-circuit current	I rms at ∼ 400 V with protection by gG (gl) fuses		kA	80	80	80	80
	Rating of associated fuses		A	32	32	63	100
Peak value of permissible current (dynamic short-circuit withstand)	Conforming to IEC 60269-1	∼ 400 V	kA	5.5	9	10.6	20
Rated making capacity	I rms at 400 V Cat. AC-23B		A	320	320	630	1000
Rated breaking capacity	I rms at 400 V Cat. AC-23B		A	256	256	500	800
Mechanical durability	Number of operating cycles			20000	10000	10000	10000
Electrical durability	Number of operating cycles cat. AC/DC-23A/B (1)			1500/300	1500/300	1500/300	1500/300
Cabling	Cable (c.s.a. min/max)		mm^2	2.5/16	6/25	10/25	25/95
	Bars (max width)		mm	–	–	–	20
Tightening torque			N.m	3	3.2	3.2	12

(1) Category "A": frequent operating cycles, category "B": infrequent operating cycles.
(2) 2 poles in series per phase.
*(3) Fit switch-disconnector fuses **GS2LB** with B1 or B2 fuses and **GS2LLB** with A4 fuses.*
(4) With terminal covers.
(5) Poles not juxtaposed.

References: pages B5/6 and B5/7
Dimensions: pages B5/25 to B5/29
Schemes: page B5/33

	GS2LB or LLB [3]	GS2MMB	GS2NB	GS2PPB	GS2QQB	GS2SB	GS2TB	GS2VB
	IEC 60947-3							
	IEC 60269-1 and 2							
	ASEFA/LOVAG, LROS, UKCA							
	IP 20							
	-40…+80							
	-20…+70							
	960							
	850							
	160	200	250	315	400	630	800	1250
	A4. B1-B2 [3]	B1-B2	B1…B3	B1…B3	B1…B4	C1-C2	C1…C3	D1
	750	750	750	800	800	1000	1000	1000
	8	8	8	8	8	12	12	12
	160	200	250	315	400	630	800	1000
	160	200	250	315	315	500	630	800
	125 [4]	200/160 [4]	250 [4]	250/315 [4]	250/315	315/400	630	630
	125	200	200	200	200/315 [5]	400/630 [5]	800	1000
	80	100	132	150	220	355	450	560
	110	140	160	220	220	355	450	560
	110	150/185	220	220/295	220/295	295/400	400	400/475
	80	80	80	80	50	80	80	80
	160	200	250	315	400	630	800	1250
	22.7	32.5	32.5	40	40	70	80	90
	1600	2000	2500	3150	4000	6300	8000	10 000
	1280	1600	2000	2520	3200	5040	6400	8000
	10000	10000	10000	10000	10000	8000	8000	5000
	1000/200	1000/200	1000/200	1000/200	1000/200	1000/200	500/100	500/100
	50/95	95/240	95/240	185/240	185/240	2 x 150 / 2 x 300	2 x 185 / 2 x 300	- / 4 x 185
	20	32	32	45	45	63	63	80
	12	25	25	25	25	44	44	44

References:
pages B5/6 and B5/7

Dimensions:
pages B5/25 to B5/29

Schemes:
page B5/33

UL, CSA, IEC - For CC and J fuses - From 32 to 800 A

Switch-disconnector-fuse characteristics

Type				GS1DDU3	GS1DU3	GS2EEU3	GS2EU3N
Environment							
Conforming to standards	Switch-disconnector fuses			UL 489, CSA 22.2 n°5, IEC 60947-3		UL 98, UL 248, CSA 22.2 n°4, IEC 60947-3	
	Fuses			UL 248			
Degree of protection conforming to IEC 60529	With terminal covers			IP 20			
Ambient air temperature around the device	Storage		°C	-40…+80			
	Operation		°C	-20…+70			
Flame resistance conforming to IEC 60695-2-1	Body		°C	960	960	960	
	Fuse cover		°C	–	–	850	
Pole characteristics							
Conventional thermal current (Ith) for ambient temperature ≤ 40 °C			A	30	30	30	30
Fuse size				CC	J	CC	J
Rated insulation voltage (Ui)			V	800	800	750	750
Rated impulse withstand voltage (Uimp)			kV	8	8	8	8
Rated operational current (Ie)	Cat. AC-23A/B (1)	∼ 400 V	A	32	32	32	32
		∼ 500 V	A	32	32	32	32
		∼ 690 V	A	32	32	32	32
Rated operational power	Cat. AC-23A/B (1)	∼ 400 V	kW	15	15	15	15
		∼ 500 V	kW	18.5	18.5	18.5	18.5
		∼ 690 V	kW	25	25	25	25
Prospective short-circuit current withstand	Conforming to UL 98 / UL 489	∼ 600 V	kA	100	100	200	200
Peak value of permissible current (dynamic short-circuit withstand)	Conforming to IEC 60269-1	∼ 400 V	kA	5.5	5.5	7.6	17.6
Rated making capacity	I rms at 400 V Cat. AC-23B		A	300	300	300	300
Rated breaking capacity	I rms at 400 V Cat. AC-23B		A	240	240	240	240
Mechanical durability	Number of operating cycles			10000	10000	10000	10000
Electrical durability	Number of operating cycles Cat. AC/DC-23A/B (1)			1500/300	1500/300	1500/300	1500/300
Cabling	Cable (c.s.a. min/max)		mm^2	2.5/6	2.5/6	2.5/6	2.5/16
			AWG	#14/#10	#14/#10	#14/#10	#14/#6
	Bars (max width)		mm	-	-	-	-
Tightening torque			N.m	3 (for wire)	4 (for wire)	5.5 (for wire)	3.5 (for wire)
			lb-in	27	27	48	31

(1) Category "A": frequent operating cycles, category "B": infrequent operating cycles.

References: pages B5/8 and B5/9
Dimensions: pages B5/30 to B5/32
Schemes: page B5/33

	GS2GU3N	GS2JU3N	GS2MU3N	GS2QU3N	GS2SU3	GS2TU3
	UL 98, CSA 22.2 n°4, IEC 60947-3					
	UL 248					
	IP 20					
	-40…+80					
	-20…+70					
	960					
	850					
	60	100	200	400	600	800
	J	J	J	J	J	L
	750	750	750	800	1000	1000
	8	8	8	8	12	12
	63	100	200	400	630	800
	63	100	200	315	630	630
	63	100	200	250	630	630
	30	51	100	220	355	450
	40	63	140	220	450	560
	55	90	185	220	600	600
	100	200	200	200	200	200
	17.6	22	32	36	80	80
	600	1000	2000	4000	6000	8000
	480	800	1600	3200	4800	6400
	10000	10000	8000	6000	5000	5000
	1500/300	1500/300	1000/200	1000/200	1000/200	500/100
	2.5/16	4/50	16/150	25/300	2 x 150	–
	#14/#6	#12/#1	#6/300 Kcmil	#4/600 Kcmil	#2/600 Kcmil	–
	-	20	32	45	100	100
	3.5 (for wire)	4 (for wire)	18 (for lug)	35 (for lug)	35 (for lug)	35 (for lug)
	31	35.4	160	310	310	310

References:
pages B5/8 and B5/9
Dimensions:
pages B5/30 to B5/32
Schemes:
page B5/33

Auxiliary contacts

GS1AM●11, GS1AM1 and GS1AM2 early break and signalling contact characteristics

Conventional thermal current (Ith) for ambient temperature ≤ 40 °C		**A**	16
Rated operational current (Ie)	Cat. AC-15	**A**	127 V: 5 - 230 V: 4 - 400 /415 V: 3 - 440 V: 2
	Cat. DC-13	**A**	24 V: 12 - 48 V: 2 - 110 V: 0.6 - 220 V: 0.4
Durability	Number of operating cycles		Mechanical: 1000000 Electrical: cat. AC-15: 30000
Fuse protection	gG	**A**	6 max
Cabling		**mm**	Faston connectors: 1 x 6.35 or 2 x 2.8

GS1AN and GS1ANT signalling contact characteristics

Conventional thermal current (Ith) for ambient temperature ≤ 40 °C		**A**	20
Rated operational current (Ie)	Cat. AC-15	**A**	127 V: 12 - 230 V: 10 - 400/415 V: 8 - 440 V: 6
	Cat. DC-13	**A**	48 V: 4 - 110 V: 1.2 - 220 V: 1
Durability	Number of operating cycles		Mechanical: 30000 Electrical: cat. AC-15: 30000
Fuse protection	gG	**A**	16 max
Cabling	Cable (c.s.a. min/max)	**mm²**	Min: 1.5 - max: 10

GS1AM110 and GS1AM101 early break and signalling contact characteristics

Conventional thermal current (Ith) for ambient temperature ≤ 40 °C		**A**	10
Rated operational current (Ie)	Cat. AC-15	**A**	120 V: 6 - 240 V: 3 - 400 V: 1.8 - 480 V: 1.5
	Cat. DC-13	**A**	24 V: 2.8 - 48 V: 1.4 - 125 V: 0.55 - 250 V: 0.27 - 400 V: 0.15
Durability	Number of operating cycles		Mechanical: 5000000 Electrical: cat. AC-15: 1000000
Cabling	Cable (c.s.a. min/max)	**mm²**	Min: 1 x 0.22 - max: 2 x 2.5

GS●AF "blown fuse" signalling contact characteristics

Conventional thermal current (Ith) for ambient temperature ≤ 40 °C		**A**	16
Rated operational current (Ie)	Cat. AC-15	**A**	230 V: 4 - 400 V: 3
	Cat. DC-13	**A**	24 V: 12 - 48 V: 2 - 110 V: 0.6 - 220 V: 0.4
Durability	Number of operating cycles		Mechanical: 30000 Electrical: cat. AC-15: 30000
Cabling		**mm**	Faston connectors: 1 x 6.35

References: page B5/12
Dimensions: page B5/33
Schemes: page B5/33

Dimensions

IEC - GS1●● (32 A) Switch-disconnector-fuse

Direct front-mounted operator

GS1DD

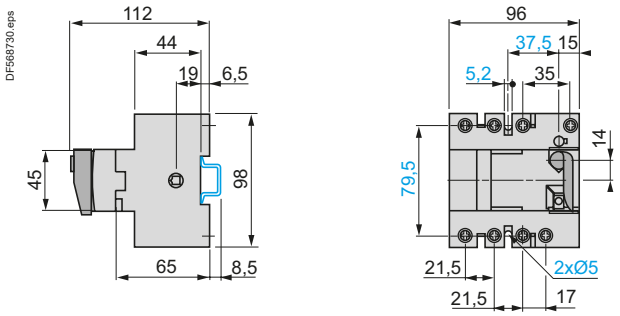

GS1DDB

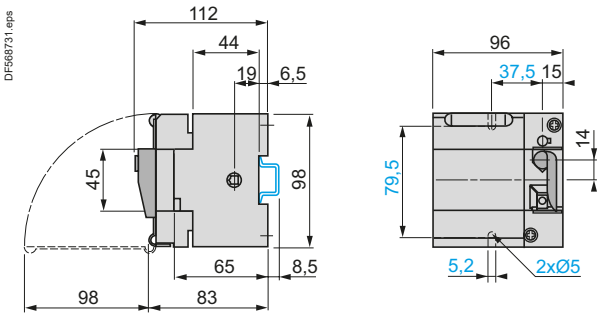

External front-mounted operator

GS1DD

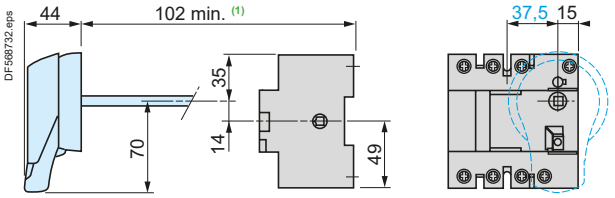

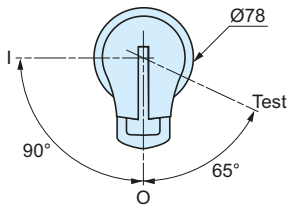

Door cut-out

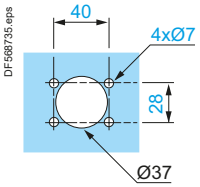

GS1DDB

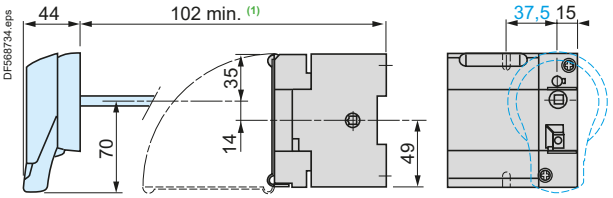

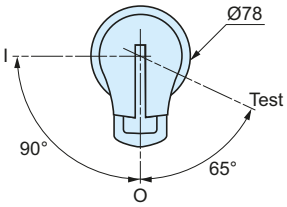

Door cut-out

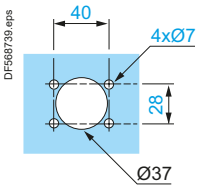

(1) With 1 or 2 auxiliary contacts GS1AM1●●: 130 mm.
(2) With 3 or 4 auxiliary contacts GS1AM1●●: 155 mm.

External right-hand side-mounted operator

GS1DD

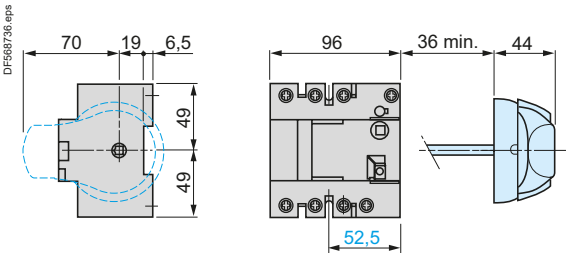

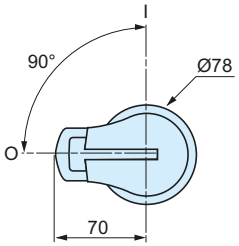

Door cut-out

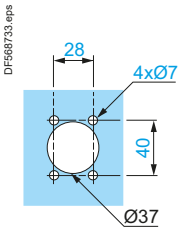

GS1DDB

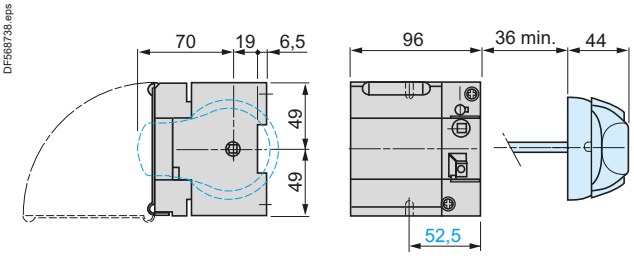

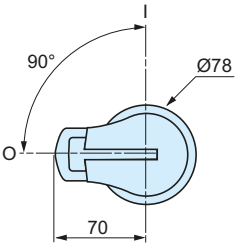

Door cut-out

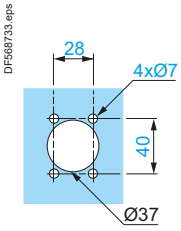

References:
pages B5/4 and B5/5

Characteristics:
pages B5/18 and B5/19

Schemes:
page B5/33

Dimensions

IEC - GS1●● (50...400 A) Switch-disconnector-fuse

Direct right-hand side-mounted operator

GS1FD (50 A), GD (63 A), JD (100 A), KD, KKD (125 A), LD, LLD (160 A), ND (250 A) and QQD (400 A)

DF538732.eps

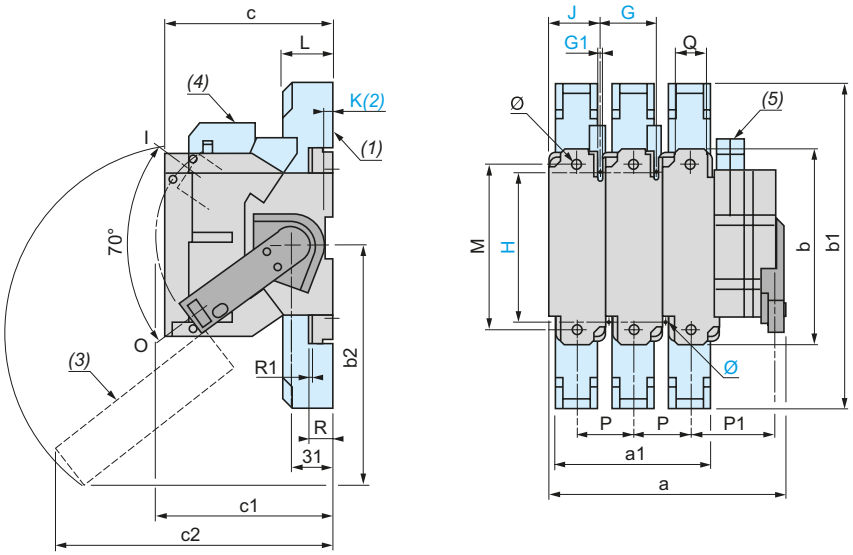

GS1		a	a1	b	b1	b2	c	c1	c2	G	G1	H	J	K	Ø	L	M	P	P1	Q	R	R1	Ø
FD	3P	118	–	118	–	–	87	134	–	27	5.4	106	31	6.5	5	–	–	27	33.5	–	–	–	–
	4P	145	–	118	–	–	87	134	–	27	5.4	106	31	6.5	5	–	–	27	33.5	–	–	–	–
GD	3P	133	–	118	–	159	116.5	134	145	32	5.4	106	36	6.5	5	–	–	32	36	–	–	–	–
	4P	165	–	118	–	159	116.5	134	145	32	5.4	106	36	6.5	5	–	–	32	36	–	–	–	–
JD, KD	3P	150	108	162	268	–	116	173	–	36	5.4	127	40	–	5	44	141	36	38	20	19.5	2.5	8.5
	4P	186	144	162	268	–	116	173	–	36	5.4	127	40	–	5	44	141	36	38	20	19.5	2.5	8.5
KKD, LLD	3P	150	108	162	268	141	126.5	173	193	36	5.4	127	40	–	5	44	141	36	38	20	19.5	2.5	8.5
	4P	186	144	162	268	141	126.5	173	193	36	5.4	127	40	–	5	44	141	36	38	20	19.5	2.5	8.5
LD	3P	192	136	162	268	174	136.5	173	229	50	5.4	140	54	–	5	44	141	50	45	20	19.5	2.5	8.5
	4P	242	172	162	268	174	136.5	173	229	50	5.4	140	54	–	5	44	141	50	45	20	19.5	2.5	8.5
ND	3P	253	180	195	345	185	146	173	251	60	6.4	162	64	–	6	65	166	60	81	32	19.5	2.5	11
	4P	313	240	195	345	185	146	173	251	60	6.4	162	64	–	6	65	166	60	81	32	19.5	2.5	11
QQD	3P	271	192	205	355	200	149	173	260	66	6.4	172	70	–	6	65	175	66	86	50	20	3	11
	4P	337	258	205	355	200	149	173	260	66	6.4	172	70	–	6	65	175	66	86	50	20	3	11

(1) Terminal cover.
(2) Mounting on ⊔ rail only for GS1FD and GS1GD (50 and 63 A).
(3) Protective screen, lockable in I position.
(4) 1 or 2 auxiliary contacts GS1AF●●.
(5) 1 or 2 auxiliary contacts GS1AM●.

Ref.
Switch-disconnector fuses

Dimensions

IEC - GS2●● (32...400 A) Switch-disconnector-fuse

External front and right-hand side-mounted operator

GS2DB (32 A), F (50 A), G, GB, JB (63 A), J (100 A), K, KK (125 A), L, LL, LB, LLB (160 A), MMB (200 A), N, NB (250 A), PPB (315 A), QQ and QQB (400 A)

DF538733.eps

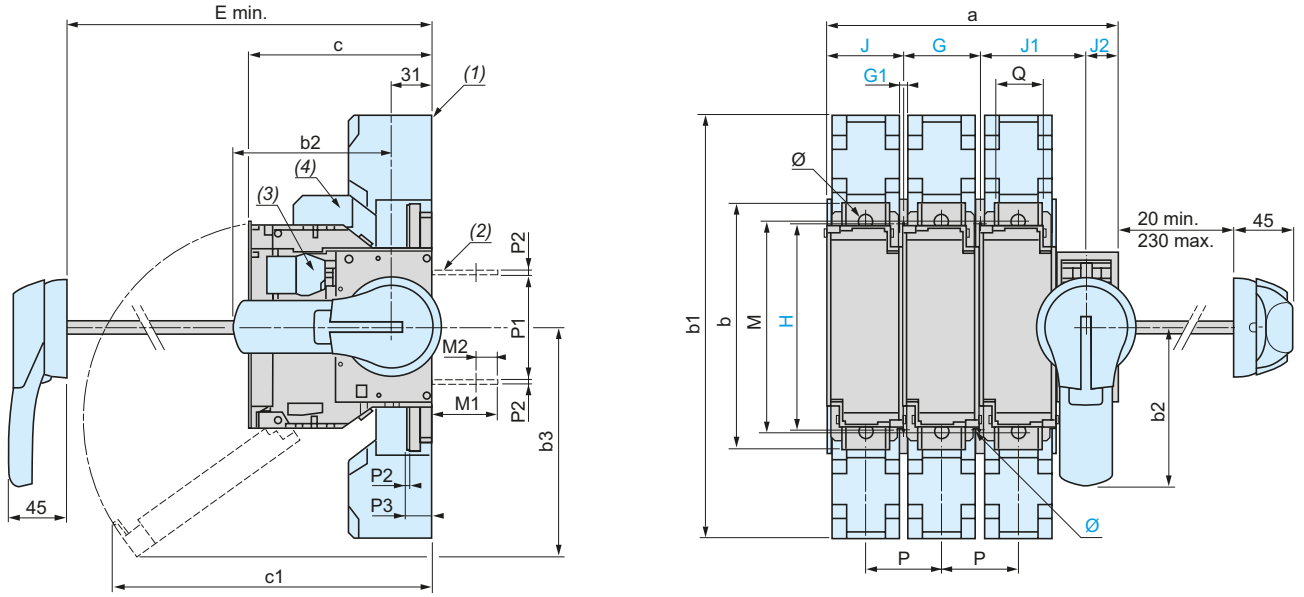

GS2		a	b	b1	b2	b3	c	c1	E min.	G	G1	H	J	J1	J2	Ø	M	M1	M2	P	P1	P2	P3	Q	Ø
F, DB	3P	121	118	–	70	85	87 (5)	153	100 (5)	27	5.4	106	31	45	18	5	–	15	6	27	59	2	–	12	–
	4P	148	118	–	70	85	87 (5)	153	100 (5)	27	5.4	106	31	45	18	5	–	15	6	27	59	2	–	12	–
G, GB	3P	136	118	–	70	159	116.5 (6)	145	125	32	5.4	106	36	50	18	5	–	15	6	32	59	2	–	12	–
	4P	168	118	–	70	159	116.5 (6)	145	125	32	5.4	106	36	50	18	5	–	15	6	32	59	2	–	12	–
J, JB, K	3P	148	162	268	125	141	116 (6)	187	135	36	5.4	127	40	54	18	5	141	41	8	36	62	2.5	19.5	20	8.5
	4P	184	162	268	125	141	116 (6)	187	135	36	5.4	127	40	54	18	5	141	41	8	36	62	2.5	19.5	20	8.5
KK, LL	3P	148	162	268	125	141	126.5 (6)	193	135	36	5.4	127	40	54	18	5	141	41	8	36	62	2.5	19.5	20	8.5
	4P	184	162	268	125	141	126.5 (6)	193	135	36	5.4	127	40	54	18	5	141	41	8	36	62	2.5	19.5	20	8.5
L, LB, LLB	3P	190	162	268	125	174	136.5	229	145	50	5.4	140	54	64	18	5	141	41	8	50	62	2.5	19.5	20	8.5
	4P	240	162	268	125	174	136.5	229	145	50	5.4	140	54	64	18	5	141	41	8	50	62	2.5	19.5	20	8.5
MMB, NB, N	3P	234	195	345	125	185	146	251	154	60	6.4	162	64	86	25	6	166	52	17	60	84	2.5	19.5	32	11
	4P	294	195	345	125	185	146	251	154	60	6.4	162	64	86	25	6	166	52	17	60	84	2.5	19.5	32	11
PPB, QQB, QQ	3P	252	205	355	125	200	149	260	157	66	6.4	172	70	91	25	6	175	54	14.5	66	84	3	20	50	11
	4P	318	205	355	125	200	149	260	157	66	6.4	172	70	91	25	6	175	54	14.5	66	84	3	20	50	11

(1) Terminal cover.
(2) Rear access connector plates (option).
(3) 1 to 8 auxiliary contacts GS1AM1●●.
(4) 1 or 2 auxiliary contacts GS1AF●●.
(5) 1 auxiliary contact GS1AM1●●: + 23.5 mm, 2 auxiliary contacts GS1AM1●●: + 47 mm.
(6) 132 mm with 2 auxiliary contacts GS1AM1●●.

Door cut-out

For external front-mounted operator

DF568742.eps

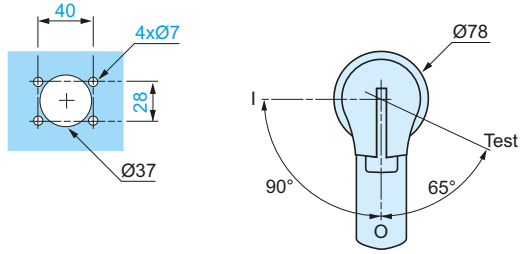

For external right-hand side-mounted operator

DF568743.eps

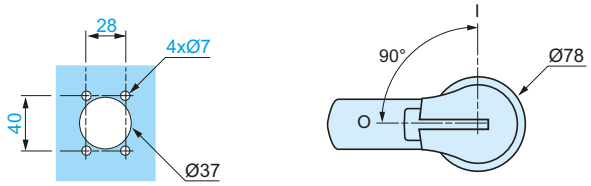

References:
pages B5/6 and B5/7

Characteristics:
pages B5/20 and B5/21

Schemes:
page B5/33

Dimensions

IEC - GS2●● (630...1250 A) Switch-disconnector-fuse

Direct front-mounted operator

GS2S, SB (630 A), TB (800 A), V and VB (1250 A)

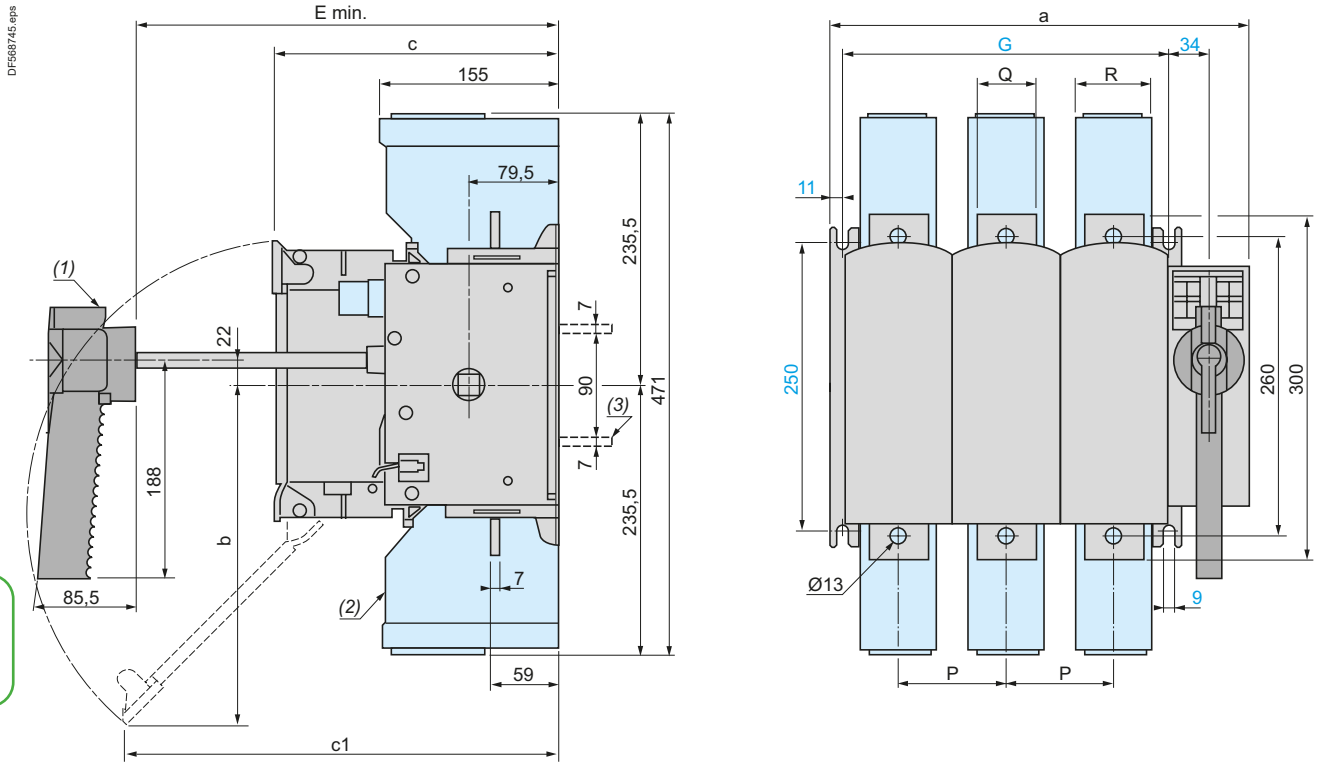

GS2		a	b	c	c1	E min.	G	P	Q	R
S, SB, TB	3P	364	300	250	380	265	284	94	51	65
	4P	458	300	250	380	265	378	94	51	65
V, VB	3P	442	355	289	295	304	362	120	77	88
	4P	562	355	289	295	304	482	120	77	88

(1) Handle GS2AH104 for GS2S, GS2SB and GS2TB.
(2) Terminal cover.
(3) Rear access connector plates (GS2V and GS2VB).

Handle GS2AH105 for GS2V and GS2VB (direct front-mounted operator)

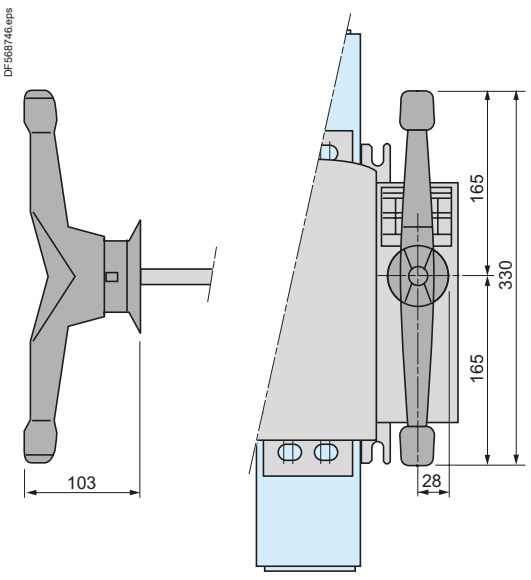

Connector plates for GS2V and GS2VB

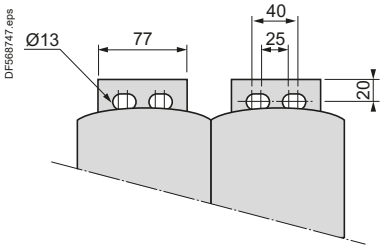

References: page B5/5
Characteristics: pages B5/19 to B5/21
Schemes: page B5/33

Dimensions

IEC - GS2●● (630...1250 A) Switch-disconnector-fuse

External front and right-hand side-mounted operator

GS2S, SB (630 A), TB (800 A), V and VB (1250 A)

DF538734.eps

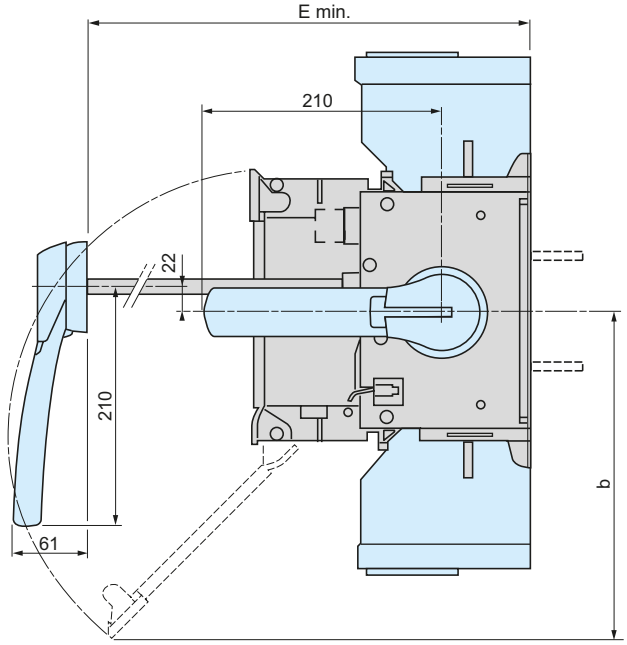

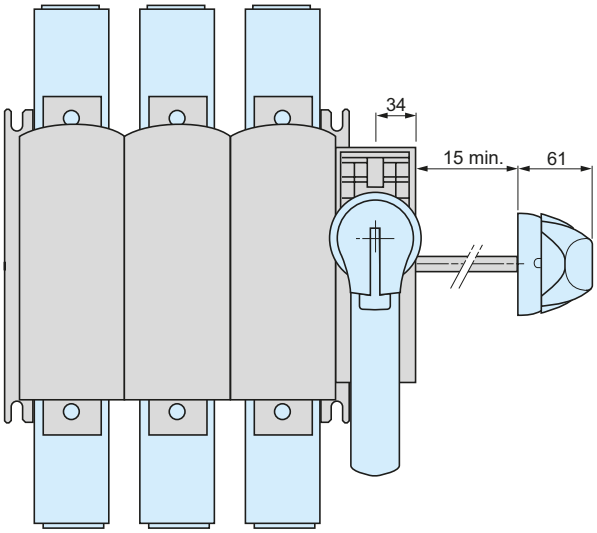

GS2		b	E min.
S, SB, TB	3P	297	265
	4P	297	265
V, VB	3P	350	304
	4P	350	304

Handle GS2AH570 or GS2AH580 for GS2V and GS2VB (external front-mounted operator)

DF568749.eps

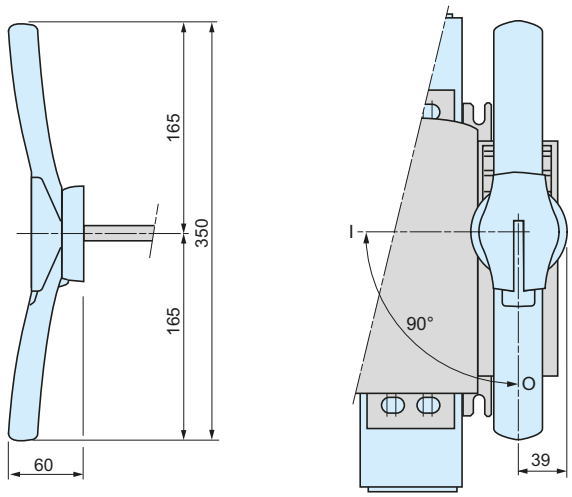

Door cut-out

For external front-mounted operator

DF568750.eps

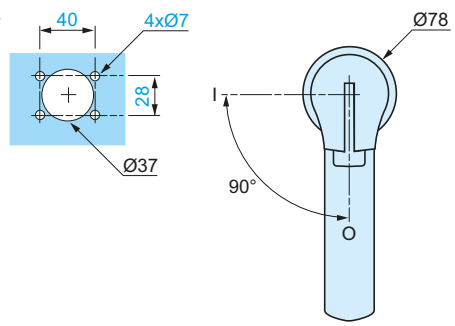

For external right-hand side-mounted operator

DF568751.eps

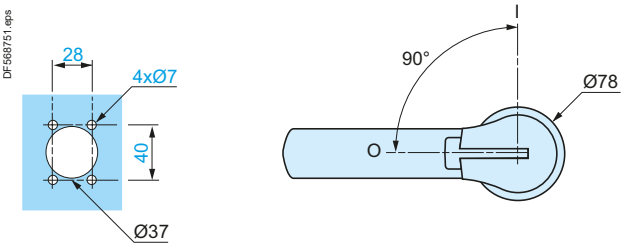

References:
page B5/5

Characteristics:
pages B5/19 to B5/21

Schemes:
page B5/33

Dimensions

UL, CSA, IEC - GS1●● GS2●● Switch-disconnector fuses (30 and 60 A)

GS1DU3 (30 A) class CC fuses, GS1DDU3 (30 A) class J fuses

DB417416.eps

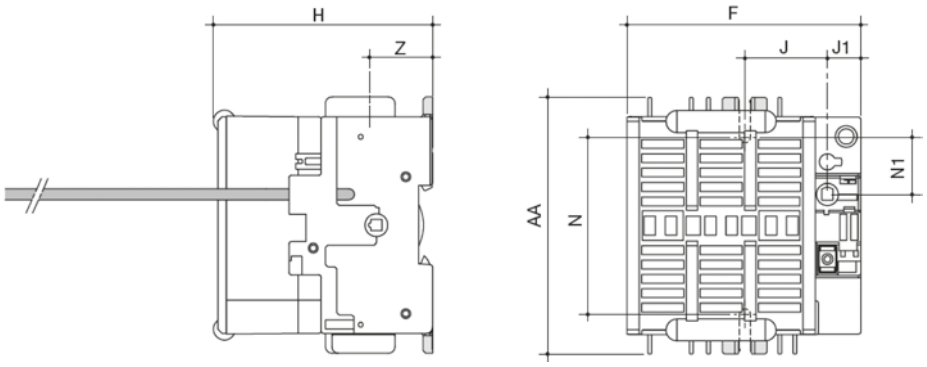

Rating	F	H	J	J1	N	N1	AA	Z
30 / CC	96	83.5	37.5	15	79.5	25.5	116	28.5
30 / J	105	99	37.5	15	79.5	25.5	116	28.5

GS2EEU3 (30 A) class CC fuses

DB417417.eps

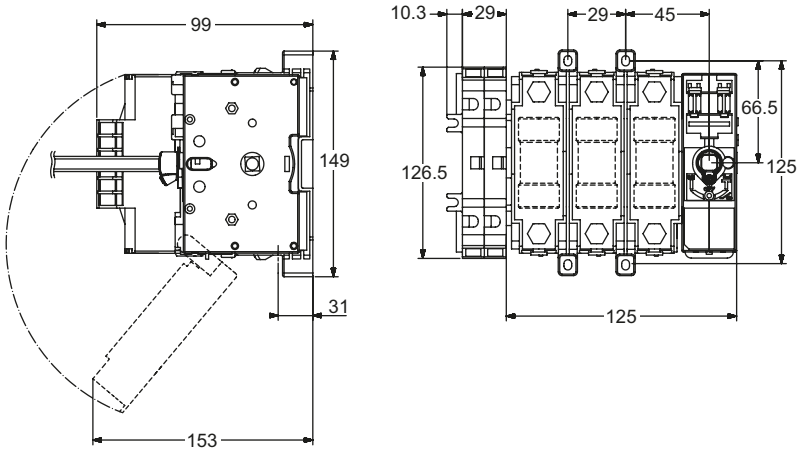

GS2EU3N, GS2GU3N (60 A) class J fuses

DB417418.eps

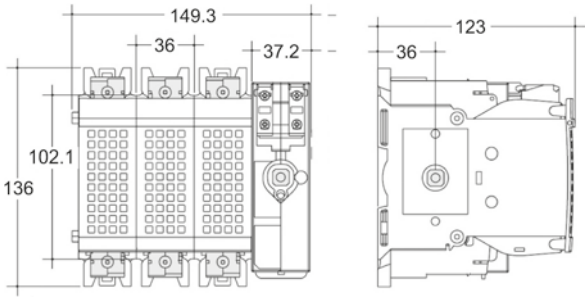

Accessories

Handle for 30 and 60 A switch-disconnector fuses

External front handle | **Door cut-out** | **External side handle** | **Door cut-out**

DF568732.eps

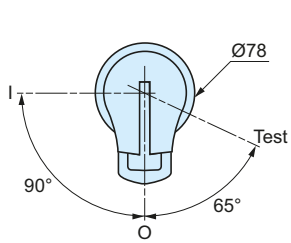

DF568735.eps

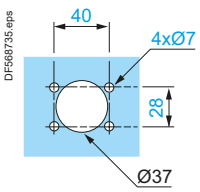

DF568736.eps

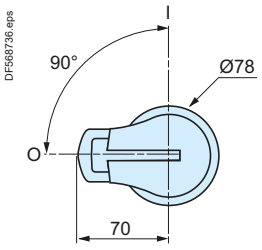

DF568733.eps

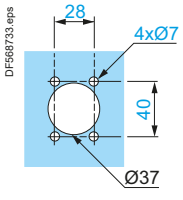

References:
pages B5/8 and B5/9

Characteristics:
pages B5/22 and B5/23

Schemes:
page B5/33

Dimensions

UL, CSA, IEC - GS2●● Switch-disconnector fuses (100 and 400 A)

GS2JU3N (100 A) class J fuses

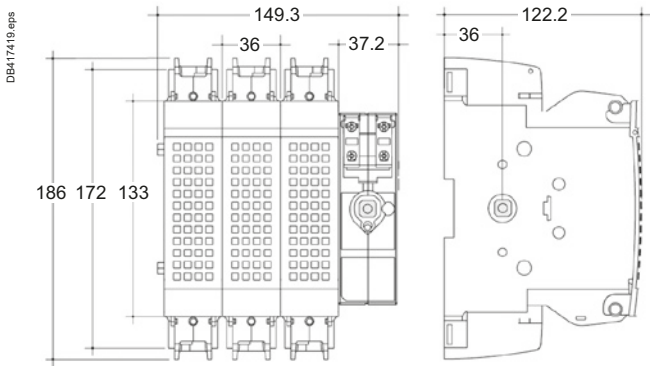

GS2MU3N (200 A) class J fuses

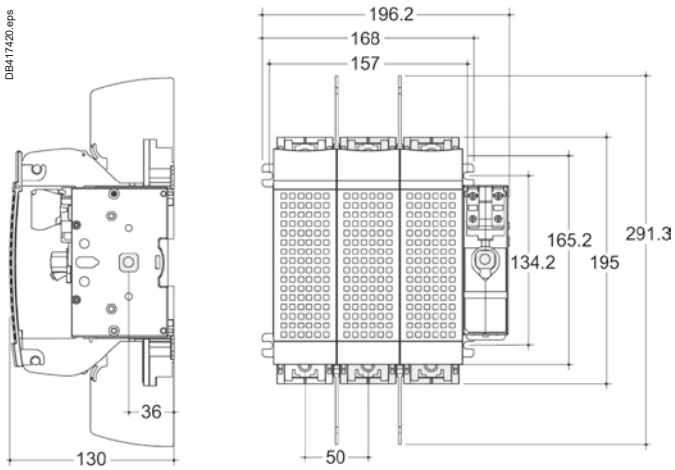

GS2QU3N (400 A) class CC fuses

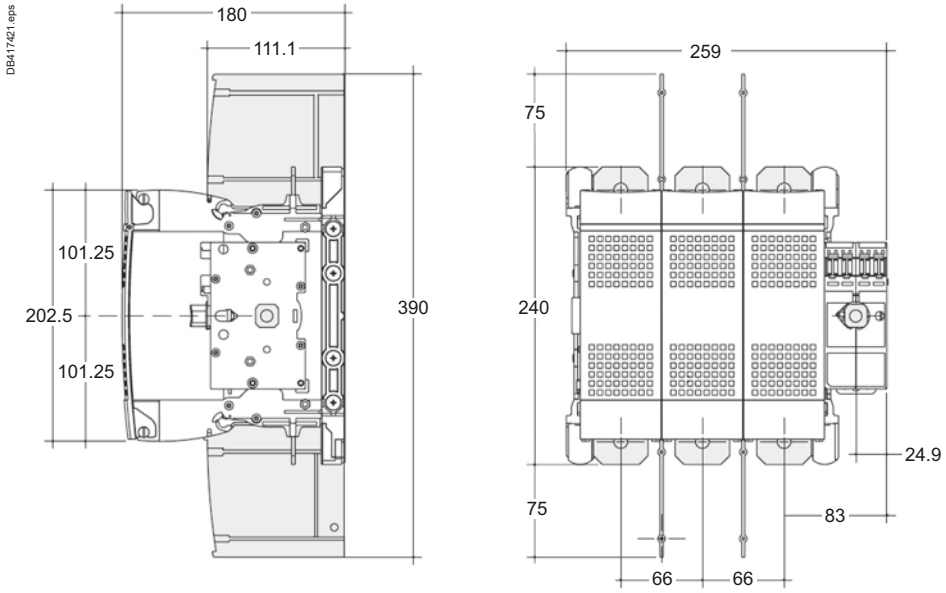

Accessories

Handle for 100, 200 and 400 A switch-disconnector fuses

For external front-mounted operator

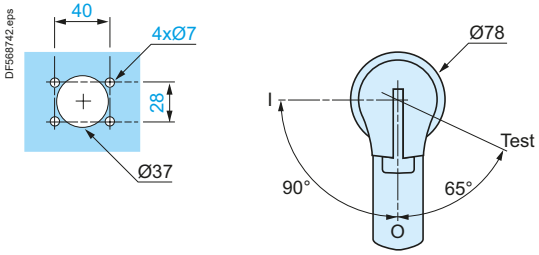

For external right-hand side-mounted operator

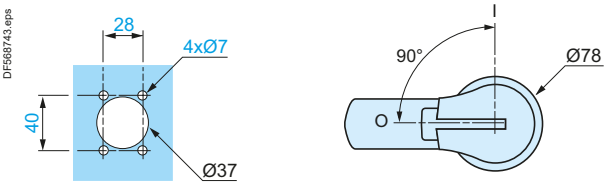

References:
pages B5/8 and B5/9

Characteristics:
pages B5/22 and B5/23

Schemes:
page B5/33

Dimensions

UL, CSA, IEC - GS2●● Switch-disconnector fuses (600 and 800 A)

GS2SU3 (600 A), GS2TU3 (800 A) class J fuses

DB417422.eps

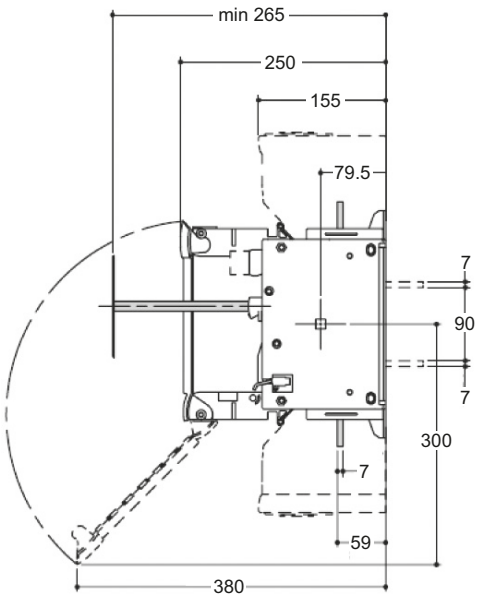

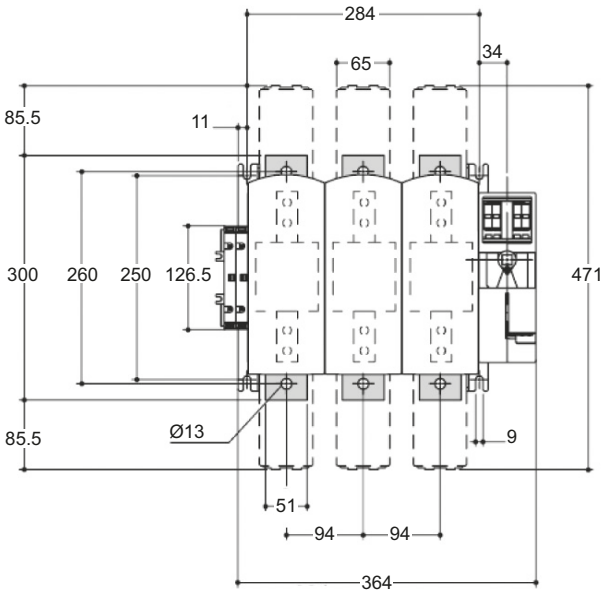

Ref.
Switch-disconnector fuses

Accessories

Handle for 600 and 800 A switch-disconnector fuses

For external front-mounted operator

DF568750.eps

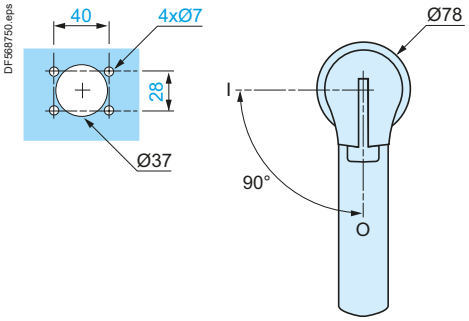

For external right-hand side-mounted operator

DF568751.eps

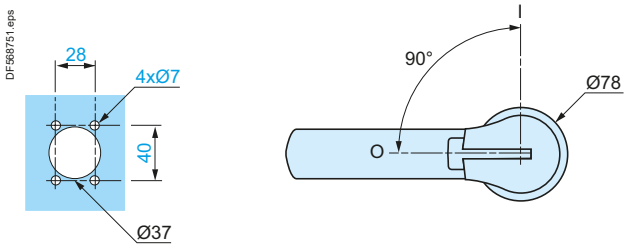

Dimensions, schemes

Auxiliary contacts

GS1AM111, GS1AM211

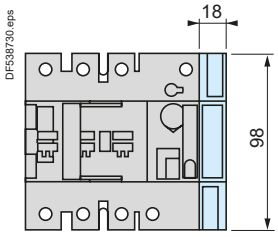

GS1AM110, GS1AM101

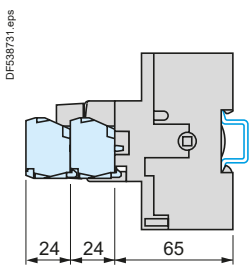

Schemes

3-pole GS

32 to 1250 A

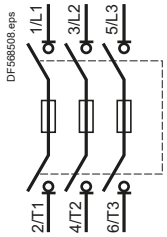

4-pole GS

32 A

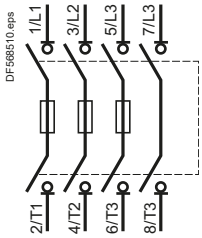

50 to 1250 A

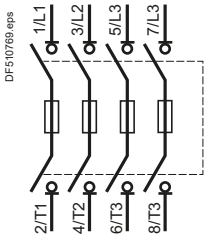

Auxiliary contacts

GS1AM110

1 N/O



GS1AM101

1 N/C



GS1AM111 and GS1AM1

1 C/O



GS1AM211 and GS1AM2

2 C/O

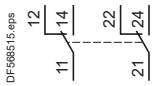

GS1AN••

1 N/C + 1 N/O



2 N/C + 2 N/O

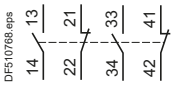

GS1AF•

1 C/O



2 C/O

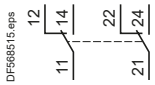

References:
page B5/12

Characteristics:
page B5/24

TeSys Power
Deca, Giga and Modular
Motor circuit breakers

TeSys Power - Deca, Giga Motor circuit breakers

Type of product	Range (400/415 V AC)		Pages
Introduction			B6/3
TeSys Deca Frame 2 - Motor circuit breakers Magnetic, Thermal magnetic (Product ref. GV2L, GV2LE, GV2P, GV2ME)	0.06 or 15 kW		B6/11
TeSys Deca Frame 2 - Motor circuit breakers Thermal magnetic - delayed tripping - For high current peak motors or 3-phase transformers (Product ref. GV2RT) Add-on blocks, accessories (for TeSys Deca Frame 2 circuit breakers)	0.09 or 11 kW		B6/18
TeSys Deca Frame 3 - Motor circuit breakers Magnetic, Thermal magnetic (Product ref. GV3L, GV3P) Add-on blocks, accessories (for TeSys Deca Frame 3 circuit breakers)	5.5 to 45 kW		B6/25
TeSys Deca Frame 4 - Motor circuit breakers Magnetic, Thermal magnetic (Product ref. GV4L, GV4LE, GV4P, GV4PE, GV4PEM, GV4PB) Add-on blocks, accessories (for TeSys Deca Frame 4 circuit breakers)	0.25 to 55 kW 1/2 to 60 HP	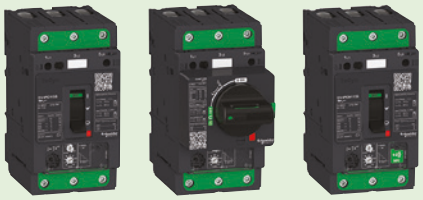	B6/31
TeSys Giga Frame 5, 6 - Motor circuit breakers Thermal magnetic (Product ref. GV5P, GV6P) Add-on blocks, accessories (for TeSys Giga Frame 5, 6 circuit breakers)	55 to 250 kW		B6/49
PowerLogic™ Energy measurement solutions			
PowerTag Energy sensors can be used with TeSys Deca, Giga motor circuit breakers			B6/58
PowerTag Energy Link Modbus TCP/IP concentrator for PowerTag Energy sensors			B6/62
TeSys Power - Modular circuit breakers for auxiliary circuits			
Modular circuit breakers Thermal magnetic (Product ref. GB)	0.5 to 20 A		B6/63



GV2LE



GV2P



GV2ME



GV3L



GV3P80



GV4●E●●●

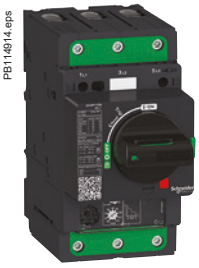

GV4●●●●



GV5P150F



GV6P500F

Circuit breakers for motor protection and control

Deca, Giga motor circuit breakers provide compact, reliable and efficient solutions for:

- isolation,
- protection against short circuits and overloads,
- On-Off manual control of motors from 0.06 to 250 kW.

They are conforming to, depending of the versions, IEC/EN 60947-1, IEC/EN 60947-2, IEC/EN 60947-4-1 and UL 60497-4-1, CSA 22.2 n° 60497-4-1.

Deca, Giga protection technologies

Deca, Giga circuit breakers are carried with 3 variants:

- Magnetic detection: product references GV2LE, GV2L, GV3L, GV4L, GV4LE for protection against short-circuit.
- Thermal-magnetic: product references GV2ME (1), GV2P, GV3P, GV4P, GV4PE, GV5, GV6 for protection against short-circuits, overload, phase loss and phase unbalance.
- Advanced: product references GV4PEM combines GV4P protections and motor jam, long start, ground-fault protections.

With a magnetic circuit breaker, a thermal relay is frequently associated in order to have a short circuit protection and an overload protection.

TeSys Deca - Frame 2 circuit breakers: 45 mm width, for motors up to 15 kW

The most commonly used circuit breaker. with a choice of about 100 auxiliaries and accessories. TeSys Deca Frame 2 circuit breakers and TeSys K, Deca contactors can be easily assembled as a single block with one accessory.
The high Frame 2 electrical endurance (up to 100 000 operating cycles) makes it very suitable for direct manual motor control, especially ref. GV2ME (1) (thermal-magnetic c.b., Ith up to 32 A).

Enclosure mounting is well adapted to ref. GV2L and GV2P, with their possible extended rotary handle and visible trip indication.

TeSys Deca - Frame 3 circuit breakers: 55 mm width, for motors up to 45 kW

High performance breakers, high breaking capacity (Ics 100 kA /400 V for ratings up to 32 A, 50 kA up to 80 A).
Wide choice of auxiliaries / accessories, possible extended rotary handle. Visible tri indication.
Patended Everlink connectors provide everlasting connection (no re-tightening required).

Direct monoblock starter assembly with TeSys Deca contactors. No accessory required.

TeSys Deca - Frame 4 circuit breakers: 81 mm width, for motors up to 55 kW

State-of-the-art technology, TeSys Deca Frame 4 is compact and robust. Electronic core of ref. GV4P gives a great detection accuracy, with alarming and advanced protections for ref. GV4PEM, GV4PB.
Magnetic, electronic thermal-magnetic, or electronic thermal magnetic with advanced protections versions.
Ratings up to 115 A with breaking capacity Ics of 25 kA/400 V (B series), 50 kA/400 V (N series) or 100 kA/400 V (S series).

TeSys Giga - Frame 5: 105 mm width, for motors up to 110 kW / Frame 6: 140 mm width, for motors up to 250 kW

TeSys Giga - Frame 5 and 6 with advanced thermal-magnetic trip unit provide more effective protection to high power motors in the most demanding appliances.
They provide protection to motors against overloads with selection of a trip class (5, 10 or 20), short-circuits, phase unbalance or phase loss.
Adjustable over-load and short circuit current settings provide flexibility.
Wide choice of auxiliaries/accessories are available for indication, control and operation.

*(1) Ref. **GV2ME●●AP** are specific **GV2ME** references for CEE zone.*



GV2L



GV2LE



GV2P



GV2ME



GV2RT



GV3L



GV3P



GV4L



GV4P



GV4PEM



GV5P150F



GV6P500F

TeSys Deca, Giga circuit breakers - Range overview

Molded case circuit breakers for motor protection and control

Product reference	Protection against			Range (kW / 415 V AC)	Control	Terminals	Dimensions (W x H x D)
	Short-circuits	Overload	Jam, ground-fault, long start... (Multifunction - see page B6/6)				
Deca - Frame 2							
GV2L	●			0.09 to 15	Rotary handle	Screw clamp	44.5 x 89 x 97 (with rotary handle)
GV2LE	●			0.06 to 15	Toggle	Screw clamp	44.5 x 89 x 78.5 (with toggle)
GV2P	●	●		0.06 to 15	Rotary handle	Screw clamp	44.5 x 89 x 97 (with rotary handle)
GV2ME (1)	●	●		0.06 to 11	Push button	Screw clamp, lug or spring	44.5 x 89 x 78.2 (with push button) (2)
GV2RT	●	●		0.09 to 11	Toggle	Screw clamp	44.5 x 89 x 78.5 (with toggle)
Deca - Frame 3							
GV3L	●			11 to 45	Rotary handle	Lug, EverLink (BTR screw)	55 x 132 x 136 (with rotary handle)
GV3P	●	●		5.5 to 45			
Deca - Frame 4							
GV4L	●			0.25 to 55 kW	Rotary handle	Lug, EverLink (BTR screw)	81 x 156 x 116 (with toggle) 81 X 156 x 165 (with rotary handle)
GV4LE	●				Toggle		
GV4P	●	●			Rotary handle		
GV4PE	●	●			Toggle		
GV4PEM	●	●	●		Toggle		
GV4PB	●	●	●	½ to 60 HP	Toggle		
Giga - Frame 5							
GV5P150●	●	●		55 to 110	Direct rotary handle	Lug, screw clamp	105 x 161 x 155 (3) (with direct rotary handle)
GV5P220●	●	●					
Giga - Frame 6							
GV6P320●	●	●		132 to 250	Direct rotary handle	Lug, screw clamp	140 x 255x 179 (3) (with direct rotary handle)
GV6P500●	●	●					

*(1) Ref. **GV2ME●●AP** are specific **GV2ME** references for CEE zone.*
*(2) 44.5 x 101 x 78.2 mm for **GV2ME●●3**.*
(3) Depth without keylock.

Introduction

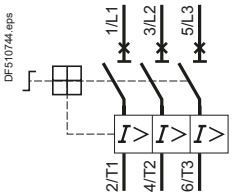

Thermal protection circuit breaker (with rotary control)

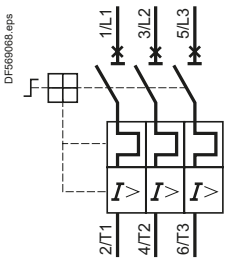

Thermal magnetic protection circuit breaker (with rotary control)



Voltage trip

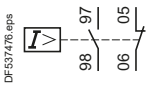

Fault signalling

Basic functions

Short circuit protection (magnetic/thermal magnetic circuit breakers)
It provides a protection of the installation against short-circuit by an instantaneous trip of the circuit breaker. The tripping is obtained by means of a magnetic element incorporated in the motor circuit breaker or by an electronic detection (ref. GV4P, GV5 and GV6).
The magnetic tripping threshold is not adjustable, except on ref. GV4L, and is a fixed ratio of the maximum setting current In.

Overload protection (thermal magnetic circuit breakers)
It provides a protection of the motor against overload. When current drawn by the motor is above its rated current, this continuous overcurrent lead to increase of motor internal temperature and reduce motor life time. Use of suitable protective device shall avoid this damage to the motor. This is obtained by means of a thermal element incorporated in the motor circuit breaker, or by sensors for electronic products (ref. GV4P, GV5 and GV6).
An automatic compensation for ambient temperature variations is also provided.
The rated operational current of the motor is displayed by turning a graduated knob.

Motor ON/OFF control
The circuit breaker provides a local manual control of the motor when used on its own (without contactor). The operation is possible by push buttons, toggle, or a single rotary handle.

Contacts position indication
Because they are suitable for isolation, the circuit breakers, in the open position, provide an adequate isolation distance and indicate the accurate position of the moving contacts by the position of the operators.

Additional functions

They are provided by additional modules.

Under voltage protection
Trips the circuit breaker in case of under voltage. The user is therefore protected against sudden starting of the machine when normal voltage is restored. Circuit breaker reset and/or start button “I” has to be pressed to restart the motor.

Remote off-power
Circuit breaker can be remotely tripped with the addition of a shunt trip.

Off-power locking
The operators on both open-mounted and enclosed motor circuit breakers can be locked in the off position “O” by up to 3 padlocks.



Motor circuit breakers versus fuse protection ?

Circuit breakers are a common solution for Powering motor against short circuits and overloads.
As a comparison, a fuse based solution can only provide a partial protection depending on the choice of the fuse type and rating. The thermal magnetic circuit breaker is adjustable and can be fine-tuned to the practical motor load.
The fuse based solution offers a very fast protection.

PB114917.eps



Advanced protections embedded on Deca - Frame 4 ref. GV4PEM, GV4PB (multifunction)

In addition to basic protections, ref. GV4PEM, GV4PB embed protections against:
- Long start (high inertia, resistive torque machines)
- Jam (overtorque, machine failure)
- Ground-fault (reduced isolation)
- Unbalanced (phase currents are not equal)
- Phase loss (1 or 2 phases missing).

Fully configurable-advanced protections:
- wireless with 'EcoStruxure Power Device App' application for Android smartphone through NFC (near field communication).

DB439411.eps

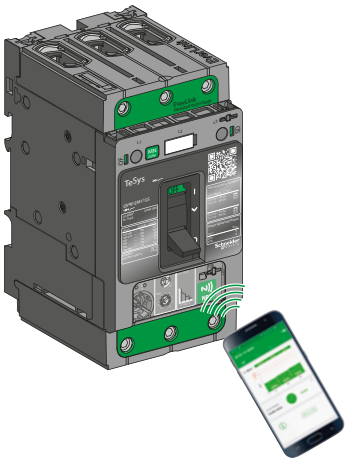

- with EcoStruxure Power Commission software on a computer connected to the test socket through a configuration and maintenance module.

DB439412.eps

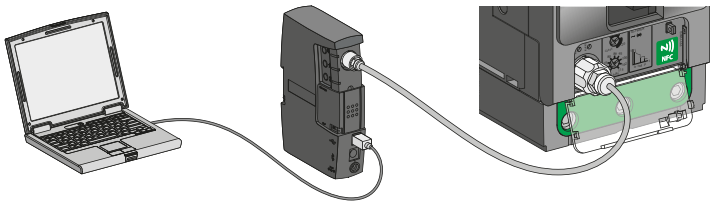

Remote indications:
Ref. GV4PEM, GV4PB circuit breaker may be equipped with an SDx alarming / fault differentiation module to prevent to trip or to identify the type of fault after a trip (see page B6/44).

DB439413.eps

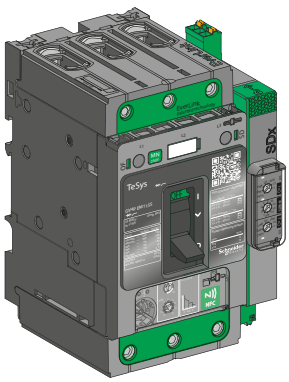

EverLink technology for Frame 3 and 4

Frame 3 and 4 features a cable connection method with patented creep-compensating technology built directly into the terminal — EverLink:
- With EverLink connectors, save space and time during panel assembly.
- Bare cable connections are as safe as compression lug ones.

PB121680.tif



No overheating connections - EverLink creep-compensated terminals for Frame 3, 4

The EverLink patented technology for terminals dramatically reduces the risk of loose bare cables due to copper creeping. Vibration withstand is improved and periodic re-tightening is no longer needed.

EverLink® Long lasting connection quality

The clamp connectors which don't need re-tightening.

PB114914_24.eps



Creeping phenomena

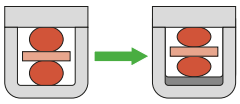

Copper conductors are subject to creep with the time, reducing the contact pressure in conventional clamps

DF526139.eps



EverLink terminals, with BTR screws

During the tightening a force is applied on the conductors and on a spring.

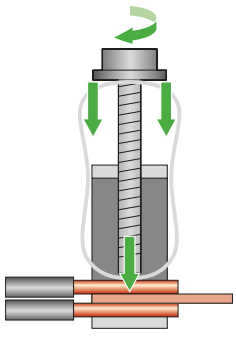

Maintaining of cables assured by pressure of spring and crimping of conductor on the contact plate.

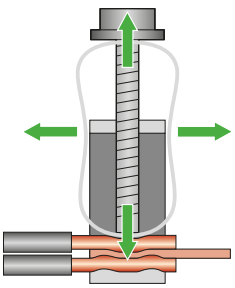

The spring compensates for cable conductor creep. Tightening force is assured.

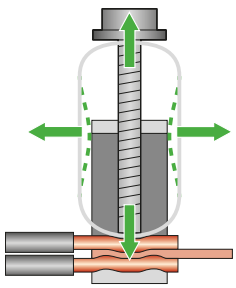

Auxiliary functions provided by add-on blocks

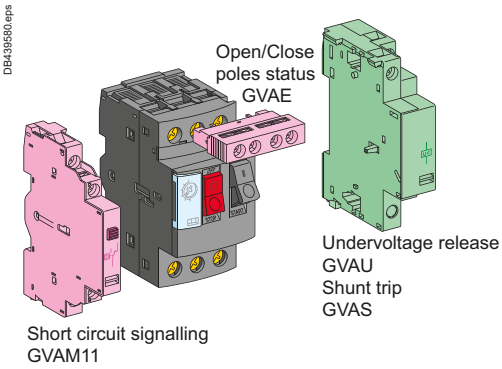

TeSys Deca - Frame 2

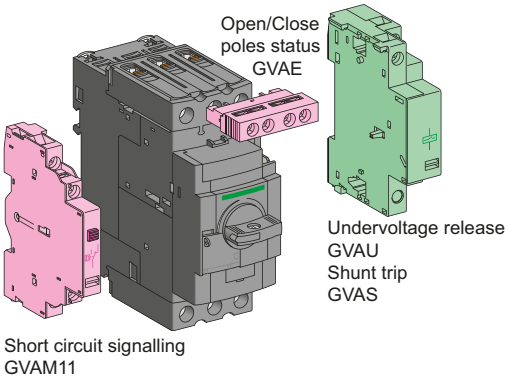

TeSys Deca - Frame 3

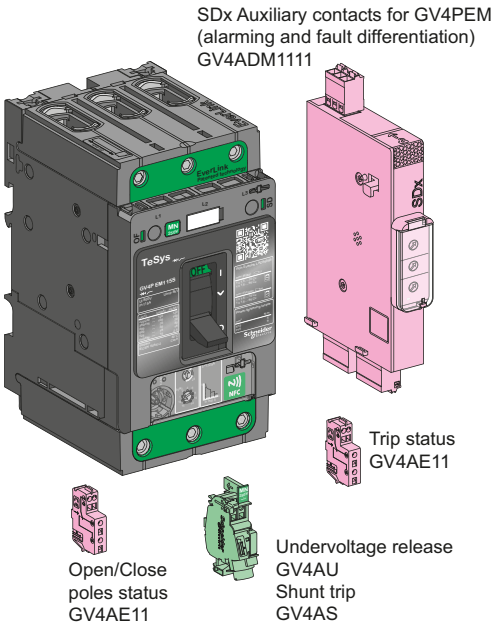

TeSys Deca - Frame 4

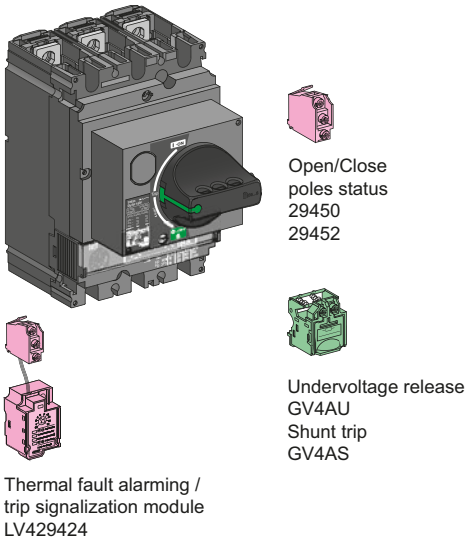

TeSys Giga - Frame 5, 6

Auxiliary contacts add-on blocks
For control, alarms, automatic actions:
- **Instantaneous** indication of the position of the circuit breaker contacts
- **Trip indication**,
- **Alarming.**

Trip units
For remote tripping of circuit breaker:
- **Shunt trip / MX**, trips the circuit breaker when powered
- **Undervoltage release / MN**, trips the circuit breaker when voltage is loss.

Compact power circuits wiring with TeSys Deca circuit breakers (Frame 2) and Deca contactors (1)

Busbars and combination blocks

Power busbars and combinations blocks provide a compact solution for assembling a group of motor starters. Theysave wiring time and provide a clear finish aspect.
These solutions are available for Deca - Frame 2 circuit breakers + Deca contactors.

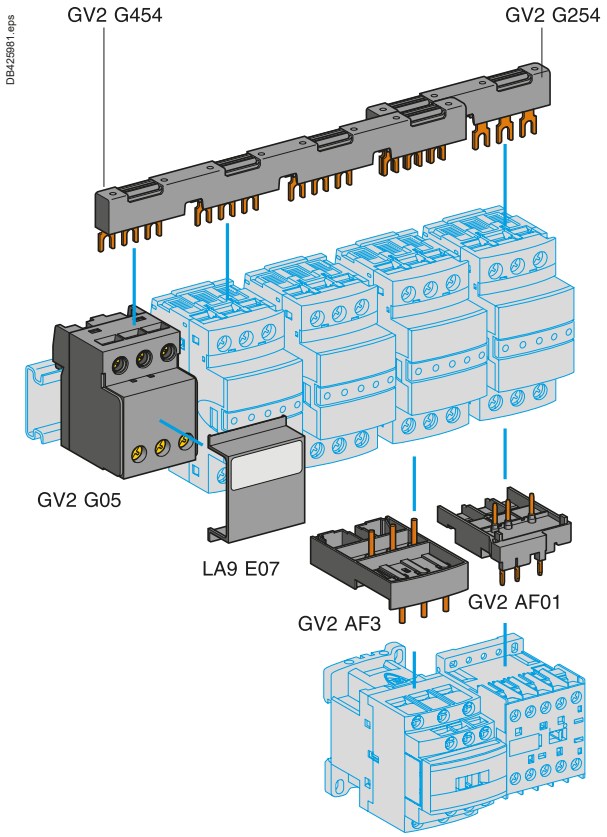

(1) Details on these solution in chapter B2 of catalogue.

TeSys Deca - Frame 2

0.06 to 15 kW



Product references

PB121671.tif



GV2L16

Motor circuit breakers from 0.09 to 15 kW

Deca - Frame 2 (ref. GV2L): Control by rotary knob, connection by screw clamp terminals

Standard power ratings of 3-phase motors 50/60 Hz in category AC-3									Magnetic protection rating	Tripping current Id ± 20 %	Use in association with thermal overload relay (class 10 A)	Reference
400/415 V			500 V			690 V						
P	Icu	Ics (1)	P	Icu	Ics (1)	P	Icu	Ics (1)				
kW	kA		kW	kA		kW	kA		A	A		
0.09	★	★	**–**	–	–	**–**	–	–	0.4	5	LRD03	**GV2L03**
0.12	★	★	**–**	–	–	**0.37**	★	★	0.63	8	LRD04	**GV2L04**
0.18	★	★	**–**	–	–	**–**	–	–	0.63	8	LRD04	**GV2L04**
–	–	–	**–**	–	–	**0.55**	★	★	1	13	LRD05	**GV2L05**
0.25	★	★	**–**	–	–	**–**	–	–	1	13	LRD05	**GV2L05**
–	–	–	**–**	–	–	**0.75**	★	★	1	13	LRD06	**GV2L05**
0.37	★	★	**0.37**	★	★	**–**	–	–	1	13	LRD05	**GV2L05**
0.55	★	★	**0.55**	★	★	**1.1**	★	★	1.6	22.5	LRD06	**GV2L06**
–	–	–	**0.75**	★	★	**–**	–	–	1.6	22.5	LRD06	**GV2L06**
0.75	★	★	**1.1**	★	★	**1.5**	4	100	2.5	33.5	LRD07	**GV2L07**
1.1	–	–	**–**	–	–	**–**	–	–			LRD08	**GV2L08**
1.5	★	★	**1.5**	★	★	**3**	4	100	4	51	LRD08	**GV2L08**
–	–	–	**–**	–	–	**–**	–	–			LRD08	**GV2L08**
2.2	★	★	**3**	★	★	**4**	4	100	6.3	78	LRD10	**GV2L10**
3	★	★	**4**	10	100	**5.5**	4	100	10	138	LRD12	**GV2L14**
4	–	–	**–**	–	–	**–**	–	–			LRD14	**GV2L14**
–	–	–	**–**	–	–	**7.5**	4	100	10	138	LRD14	**GV2L14**
–	–	–	**–**	–	–	**9**	4	100	14	170	LRD16	**GV2L16**
5.5	50	50	**7.5**	10	75	**11**	4	100	14	170	LRD16	**GV2L16**
7.5	50	50	**9**	10	75	**15**	4	100	18	223	LRD21	**GV2L20**
9	50	50	**11**	10	75	**18.5**	4	100	25	327	LRD22	**GV2L22**
11	50	50	**15**	10	75	**–**	–	–	25	327	LRD22	**GV2L22**
15	50	50	**18.5**	10	75	**22**	4	100	32	416	LRD32	**GV2L32**

(1) As % of Icu. Associated current limiter or fuses, where required.
★ > 100 kA.

Characteristics: pages B6/72 to B6/74
Curves: pages B6/77 to B6/82
Dimensions, schemes: pages B6/90 to B6/92, B6/99

Product references

PB111879.eps



GV2LE

Magnetic motor circuit breakers from 0.06 to 15 kW

Deca - Frame 2 (ref. GV2LE): control by rocker lever, connection by screw clamp terminals

Standard power ratings of 3-phase motors 50/60 Hz in category AC-3									Magnetic protection rating	Tripping current Id ± 20 %	Use in association with thermal overload relay	Reference
400/415 V			500 V			690 V						
P	Icu	Ics (1)	P	Icu	Ics (1)	P	Icu	Ics (1)				
kW	kA		kW	kA		kW	kA		A	A		
0.06	★	★	–	–	–	–	–	–	0.4	5	LR2K0302	**GV2LE03**
0.09	★	★	–	–	–	–	–	–	0.4	5	LR2K0304	**GV2LE03**
0.12	★	★	–	–	–	**0.37**	★	★	0.63	8	LR2K0304	**GV2LE04**
0.18	★	★	–	–	–	–	–	–	0.63	8	LR2K0305	**GV2LE04**
–	–	–	–	–	–	**0.55**	★	★	1	13	LR2K0305	**GV2LE05**
0.25	★	★	–	–	–	–	–	–	1	13	LR2K0306	**GV2LE05**
–	–	–	–	–	–	**0.75**	★	★	1	13	LR2K0306	**GV2LE05**
0.37	★	★	**0.37**	★	★	–	–	–	1	13	LR2K0306	**GV2LE05**
0.55	★	★	**0.55**	★	★	**1.1**	★	★	1.6	22.5	LR2K0307	**GV2LE06**
–	–	–	**0.75**	★	★	–	–	–	1.6	22.5	LR2K0307	**GV2LE06**
0.75	★	★	**1.1**	★	★	**1.5**	3	75	2.5	33.5	LR2K0308	**GV2LE07**
1.1	★	★	–	–	–	–	–	–	2.5	33.5	LR2K0308	**GV2LE07**
1.5	★	★	**1.5**	★	★	**3**	3	75	4	51	LR2K0310	**GV2LE08**
–	–	–	**2.2**	★	★	–	–	–	4	51	LR2K0312	**GV2LE08**
2.2	★	★	**3**	50	100	**4**	3	75	6.3	78	LR2K0312	**GV2LE10**
3	★	★	**4**	10	100	**5.5**	3	75	10	138	LR2K0314	**GV2LE14**
4	★	★	**5.5**	10	100	–	–	–	10	138	LR2K0316	**GV2LE14**
–	–	–	–	–	–	**7.5**	3	75	10	138	LRD14	**GV2LE14**
–	–	–	–	–	–	**9**	3	75	14	170	LRD16	**GV2LE16**
5.5	15	50	**7.5**	6	75	**11**	3	75	14	170	LR2K0321	**GV2LE16**
7.5	15	50	**9**	6	75	**15**	3	75	18	223	LRD21	**GV2LE20**
9	15	40	**11**	4	75	**18.5**	3	75	25	327	LRD22	**GV2LE22**
11	15	40	**15**	4	75	–	–	–	25	327	LRD22	**GV2LE22**
15	10	50	**18.5**	4	75	**22**	3	75	32	416	LRD32	**GV2LE32**

(1) As % of Icu.
★ > 100 kA.

Characteristics: pages B6/72 to B6/74
Curves: pages B6/77 to B6/82
Dimensions, schemes: pages B6/90 to B6/92, B6/99

PB121673.tif



GV2ME

Motor circuit breakers from 0.06 to 15 kW / 400 V, with screw clamp terminals

Deca - Frame 2 (ref. GV2ME) with pushbutton control

Standard power ratings of 3-phase motors 50/60 Hz in category AC-3									Setting range of thermal trips (2)	Magnetic tripping current Id ± 20 %	Reference
400/415 V			500 V			690 V					
P	Icu	Ics (1)	P	Icu	Ics (1)	P	Icu	Ics (1)			
kW	kA	%	kW	kA	%	kW	kA	%	A	A	
–	–	–	–	–	–	**–**	–	–	0.1…0.16	1.5	**GV2ME01**
0.06	★	★	–	–	–	–	–	–	0.16…0.25	2.4	**GV2ME02**
0.09	★	★	–	–	–	–	–	–	0.25…0.40	5	**GV2ME03**
0.12	★	★	–	–	–	**0.37**	★	★	0.40…0.63	8	**GV2ME04**
0.18	★	★	–	–	–	**–**	–	–			
0.25	★	★	–	–	–	**0.55**	★	★	0.63…1	13	**GV2ME05**
0.37	★	★	**0.37**	★	★	**–**	–	–	1…1.6	22.5	**GV2ME06**
0.55	★	★	**0.55**	★	★	**0.75**	★	★			
–	–	–	**0.75**	★	★	**1.1**	★	★			
0.75	★	★	**1.1**	★	★	**1.5**	3	75	1.6…2.5	33.5	**GV2ME07**
1.1	★	★	**1.5**	★	★	**2.2**	3	75	2.5…4	51	**GV2ME08**
1.5	★	★	**2.2**	★	★	**3**	3	75			
2.2	★	★	**3**	50	100	**4**	3	75	4…6.3	78	**GV2ME10**
3	★	★	**4**	10	100	**5.5**	3	75	6…10	138	**GV2ME14**
4	★	★	**5.5**	10	100	**7.5**	3	75			
5.5	15	50	**7.5**	6	75	**9**	3	75	9…14	170	**GV2ME16**
–	–	–	**–**	–	–	**11**	3	75			
7.5	15	50	**9**	6	75	**15**	3	75	13…18	223	**GV2ME20**
9	15	40	**11**	4	75	**18.5**	3	75	17…23	327	**GV2ME21**
11	15	40	**15**	4	75	**–**	–	–	20…25	327	**GV2ME22** (3)
15	10	50	**18.5**	4	75	**22**	3	75	24…32	416	**GV2ME32**

Motor circuit breakers from 0.06 to 15 kW / 400 V, with lugs

To order thermal magnetic circuit breakers with connection by lugs, add the digit **6** to the end of reference selected above.
Example: ref. **GV2ME08** becomes **GV2ME086**.

Thermal magnetic circuit breakers GV2ME with built-in auxiliary contact block

With instantaneous auxiliary contact block (composition, see page B6/21):

■ GVAE1, add suffix **AE1TQ** to the motor circuit breaker reference selected above.
Example: **GV2ME01AE1TQ**.
■ GVAE11, add suffix **AE11TQ** to the motor circuit breaker reference selected above.
Example: **GV2ME01AE11TQ**.
■ GVAN11, add suffix **AN11TQ** to the motor circuit breaker reference selected above.
Example: **GV2ME01AN11TQ**.

These circuit breakers with built-in contact block are sold in lots of 20 units in a single pack.

(1) As % of Icu.
(2) The thermal trip setting must be within the range marked on the graduated knob.
*(3) Maximum rating which can be mounted in enclosures **GV2MC** or **MP**, please consult your Regional Sales Office.*
★ *> 100 kA.*

Characteristics: pages B6/72 to B6/76
Curves: pages B6/83 to B6/85
Dimensions, schemes: pages B6/93 to B6/97, B6/99

Product references - UL applications

PB121673.tif



GV2ME

Motor circuit breakers from 3/4 to 20 HP / 460 V, with screw clamp terminals

Deca - Frame 2 (ref. GV2ME) with pushbutton control

Thermal setting (A)	Maximum Horsepower ratings								Group Motor applications	Reference
	Single-Phase			Three-Phase						
	115 V	200 V	230 V	115 V	200 V	230 V	460 V	575 V	Max. Fuse or Circuit breaker (A)	
0.1…0.16	–	–	–	–	–	–	–	–	450	**GV2ME01**
0.16…0.25	–	–	–	–	–	–	–	–	450	**GV2ME02**
0.25…0.40	–	–	–	–	–	–	–	–	450	**GV2ME03**
0.40…0.63	–	–	–	–	–	–	–	–	450	**GV2ME04**
0.63…1	–	–	–	–	–	–	–	1/2	450	**GV2ME05**
1…1.6	–	–	1/10	–	–	–	3/4	3/4	450	**GV2ME06**
1.6…2.5	–	1/6	1/6	–	1/2	1/2	1	1.5	450	**GV2ME07**
2.5…4	1/8	1/4	1/3	–	3/4	3/4	2	3	450	**GV2ME08**
4…6.3	1/4	1/2	1/2	3/4	1	1.5	3	5	450	**GV2ME10**
6…10	1/2	1	1.5	1	2	3	5	7.5	450	**GV2ME14**
9…14	3/4	2	2	2	3	3	10	10	450	**GV2ME16**
13…18	1	2	3	2	5	5	10	15	450	**GV2ME20**
17…23	1.5	3	3	3	5	7.5	15	20	450	**GV2ME21**
20…25	2	–	–	–	7.5	7.5	15	20	450	**GV2ME22**
24…32	2	5	5	5	7.5	10	20	25	450	**GV2ME32**

Characteristics:
pages B6/72 to B6/76

Curves:
pages B6/83 to B6/85

Dimensions, schemes:
pages B6/93 to B6/97, B6/99

Product references



GV2ME●●3

Motor circuit breakers from 0.06 to 11 kW, with spring terminal connections

Deca - Frame 2 (ref. GV2ME) (1) with pushbutton control

Standard power ratings of 3-phase motors 50/60 Hz in category AC-3						Setting range of thermal trips (3)	Magnetic tripping current Id ± 20 %	Reference
400/415 V			500 V					
P	Icu	Ics (2)	P	Icu	Ics (2)			
kW	kA	%	kW	kA	%	A	A	
–	–	–	–	–	–	0.1…0.16	1.5	**GV2ME013**
0.06	★	★	–	–	–	0.16…0.25	2.4	**GV2ME023**
0.09	★	★	–	–	–	0.25…0.40	5	**GV2ME033**
0.12 **0.18**	★ ★	★ ★	–	–	–	0.40…0.63	8	**GV2ME043**
0.25 **0.37**	★ ★	★ ★	**0.37**	★	★	0.63…1	13	**GV2ME053**
0.37 **0.55**	★ ★	★ ★	**0.37** **0.55** **0.75**	★ ★ ★	★ ★ ★	1…1.6	22.5	**GV2ME063**
0.75	★	★	**1.1**	★	★	1.6…2.5	33.5	**GV2ME073**
1.1 **1.5**	★ ★	★ ★	**1.5** **2.2**	★ ★	★ ★	2.5…4	51	**GV2ME083**
2.2	★	★	**3**	50	100	4…6.3	78	**GV2ME103**
3 **4**	★ ★	★ ★	**4** **5.5**	10 10	100 100	6…10	138	**GV2ME143**
5.5	15	50	**7.5**	6	75	9…14	170	**GV2ME163**
7.5	15	50	**9**	6	75	13…18	223	**GV2ME203**
9 **11**	15 15	40 40	**11**	4	75	17…23	327	**GV2ME213**
11	15	40	**15**	4	75	20…25	327	**GV2ME223**

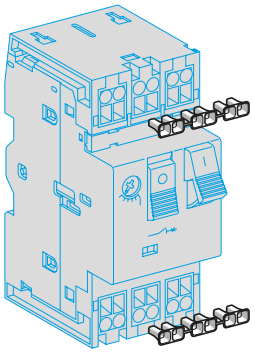

LA9D99

Contact blocks

Description	Mounting	Maximum number	Type of contacts	Sold in lots of	Unit reference
Instantaneous auxiliary contacts	Front	1	N/O + N/C	10	**GVAE113**
			N/O + N/O	10	**GVAE203**
	LH side	2	N/O + N/C	1	**GVAN113**
			N/O + N/O	1	**GVAN203**

Accessory

Description	Application	Sold in lots of	Unit reference
Cable end reducer	For connection of conductors from 1 to 1.5 mm²	20	**LA9D99**

*(1) For connection of conductors from 1 to 1.5 mm², the use of an **LA9D99** cable end reducer is recommended.*
*(2) Maximum rating which can be mounted in enclosures **GV2MC** or **MP**, please consult your Regional Sales Office*
(3) The thermal trip setting must be within the range marked on the graduated knob.
★ > 100 kA.

Characteristics: pages B6/72 to B6/76
Curves: pages B6/83 to B6/85
Dimensions, schemes: pages B6/93 to B6/97, B6/99

Product references

PB121672.tif



GV2P08

Motor circuit breakers from 0.06 to 30 kW / 400 V

Standard power ratings of 3-phase motors 50/60 Hz in category AC-3									Setting range of thermal trips (2)	Magnetic tripping current Id ± 20 %	Reference
400/415 V			500 V			690 V					
P	Icu	Ics (1)	P	Icu	Ics (1)	P	Icu	Ics (1)			
kW	kA	%	kW	kA	%	kW	kA	%	A	A	
Deca - Frame 2 (ref. GV2P): control by rotary knob											
Screw clamp terminals											
–	–	–	–	–	–	–	–	–	0.1…0.16	1.5	**GV2P01**
0.06	★	★	–	–	–	–	–	–	0.16…0.25	2.4	**GV2P02**
0.09	★	★	–	–	–	–	–	–	0.25…0.40	5	**GV2P03**
0.12	★	★	–	–	–	**0.37**	★	★	0.40…0.63	8	**GV2P04**
0.18	★	★	–	–	–	**–**	–	–			
0.25	★	★	–	–	–	**0.55**	★	★	0.63…1	13	**GV2P05**
0.37	★	★	**0.37**	★	★	**–**	–	–	1…1.6	22.5	**GV2P06**
0.55	★	★	**0.55**	★	★	**0.75**	★	★			
0.75	★	★	**1.1**	★	★	**1.5**	8	100	1.6…2.5	33.5	**GV2P07**
1.1	★	★	**1.5**	★	★	**2.2**	8	100	2.5…4	51	**GV2P08**
2.2	★	★	**3**	★	★	**4**	6	100	4…6.3	78	**GV2P10**
3	★	★	**5**	50	100	**5.5**	6	100	6…10	138	**GV2P14**
5.5	★	★	**7.5**	42	75	**9**	6	100	9…14	170	**GV2P16**
–	–	–	**–**	–	–	**11**	6	100			
7.5	50	50	**9**	10	75	**15**	4	100	13…18	223	**GV2P20**
9	50	50	**11**	10	75	**18.5**	4	100	17…23	327	**GV2P21**
11	50	50	**15**	10	75	**–**	–	–	20…25	327	**GV2P22**
15	50	50	**18.5**	10	75	**22**	4	100	24…32	416	**GV2P32**

How to use the table : select your load operating voltage, then select its standard power value (below, in the same column). The appropriate circuit breaker is in the extreme right column, in the corresponding row.
Exemple: GV2P04 can protect 0.12 and 0.18 kW under 400/415 V, and 0.18 kW under 440 V, and 0,37 kW under 690 V. No 500 V standard power value can fit GV2P04.

Motor circuit breakers up to 50 HP / 600 V, UL 60947-4-1 type E

Deca - Frame 2 (ref. GV2P) (3)

To obtain a GV2P motor circuit breaker, UL 60947-4-1 type E, use the following with the circuit breaker:
■ a “Large Spacing” adapter **GV2GH7.**

Motor circuit breakers from 3/4 to 20 HP / 460 V, with screw clamp terminals

Deca - Frame 2 (ref. GV2P) with rotary handle

Thermal setting (A)	Maximum Horsepower ratings (4)								Group Motor applications	Reference
	Single-Phase			Three-Phase						
	115 V	200 V	230 V	115 V	200 V	230 V	460 V	575 V	Max. Fuse or Circuit breaker (A)	
0.1…0.16	–	–	–	–	–	–	–	–	450	**GV2P01**
0.16…0.25	–	–	–	–	–	–	–	–	450	**GV2P02**
0.25…0.40	–	–	–	–	–	–	–	–	450	**GV2P03**
0.40…0.63	–	–	–	–	–	–	–	–	450	**GV2P04**
0.63…1	–	–	–	–	–	–	–	1/2	450	**GV2P05**
1…1.6	–	–	1/10	–	–	–	3/4	3/4	450	**GV2P06**
1.6…2.5	–	1/6	1/6	–	1/2	1/2	1	1.5	450	**GV2P07**
2.5…4	1/8	1/4	1/3	–	3/4	3/4	2	3	450	**GV2P08**
4…6.3	1/4	1/2	1/2	3/4	1	1.5	3	5	450	**GV2P10**
6…10	1/2	1	1.5	1	2	3	5	7.5	450	**GV2P14**
9…14	3/4	2	2	2	3	3	10	10	450	**GV2P16**
13…18	1	2	3	2	5	5	10	15	450	**GV2P20**
17…23	1.5	3	3	3	5	7.5	15	20	450	**GV2P21**
20…25	2	–	–	–	7.5	7.5	15	20	450	**GV2P22**
24…32	2	5	5	5	7.5	10	20	25	450	**GV2P32**

(1) As % of Icu.
(2) The thermal trip setting must be within the range marked on the graduated knob.
(3) Accessory: see page B6/23.
(4) 3P FLA corresponding values: see page A5/84.
★ *> 100 kA.*

Motor circuit breakers

Characteristics: pages B6/72 to B6/76
Curves: pages B6/83 to B6/86
Dimensions, schemes: pages B6/93 to B6/97, B6/99

Product references

PB121514.eps



GV2RT

For motors with high current peak on starting

Deca - Frame 2 (ref. GV2RT) control by rocker lever

Standard power ratings of 3-phase motors 50/60 Hz in category AC-3					Setting range of thermal trips [1]	Magnetic tripping current Id ± 20 %	Reference
220/ 230 V	400/ 415 V	440 V	500 V	690 V			
kW	kW	kW	kW	kW	A	A	
0.06	0.09	0.09 0.12	–	–	0.25…0.40	8	**GV2RT03**
–	0.12 0.18	0.18	–	0.37	0.40…0.63	13	**GV2RT04**
0.09 0.12	0.25 0.37	0.25 0.37	0.37	0.55	0.63…1	22	**GV2RT05**
0.18 0.25	0.37 0.55	0.37 0.55	0.37 0.55 0.75	0.75 1.1	1…1.6	33	**GV2RT06**
0.37	0.75	0.75 1.1	1.1	1.5	1.6…2.5	51	**GV2RT07**
0.55 0.75	1.1 1.5	1.5	1.5 2.2	2.2 3	2.5…4	78	**GV2RT08**
1.1	2.2	2.2 3	3	4	4…6.3	138	**GV2RT10**
1.5 2.2	3 4	4	4 5.5	5.5 7.5	6…10	200	**GV2RT14**
2.2 3	5.5	5.5 7.5	7.5	9 11	9…14	280	**GV2RT16**
4	7.5	7.5 9	9	15	13…18	400	**GV2RT20**
5.5	9 11	11	11	18.5	17…23	400	**GV2RT21**

(1) The thermal trip setting must be within the range marked on the graduated knob.

For primaries of 3-phase transformers

Deca - Frame 2 (ref. GV2RT) control by rocker lever

Standard power ratings					Setting range of thermal trips [2]	Magnetic tripping current Id ± 20 %	Reference
230/240 V	400/415 V	440 V	500 V	690 V			
kVA	kVA	kVA	kVA	kVA	A	A	
–	–	–	–	–	0.25…0.40	8	**GV2RT03**
–	–	–	–	–	0.40…0.63	13	**GV2RT04**
–	–	0.63	0.63	1	0.63…1	22	**GV2RT05**
0.4	0.63	1	1	–	1…1.6	33	**GV2RT06**
0.63	1	–	1.6	1.6 2	1.6…2.5	51	**GV2RT07**
1	1.6 2	1.6 2	2 2.5	2.5	2.5…4	78	**GV2RT08**
1.6 2	2.5	2.5 4	4	4 5 6.3	4…6.3	138	**GV2RT10**
2.5	4 5	5	5 6.3	–	6…10	200	**GV2RT14**
4	6.3	6.3	–	10 12.5	9…14	280	**GV2RT16**
5 6.3	10	10	10 12.5	10	13…18	400	**GV2RT20**

Accessory [3]

Description	Reference
Padlockable external operator (IP 54) black handle, blue legend plate	**GV2AP03**

(2) The thermal trip setting must be within the range marked on the graduated knob.

*(3) Other accessories such as mounting, cabling and marking accessories are identical to those used for **GV2ME** motor circuit breakers, see page B6/23.*

Characteristics:
pages B6/72 to B6/76

Curves:
pages B6/83 to B6/85

Dimensions, schemes:
pages B6/98 to B6/99

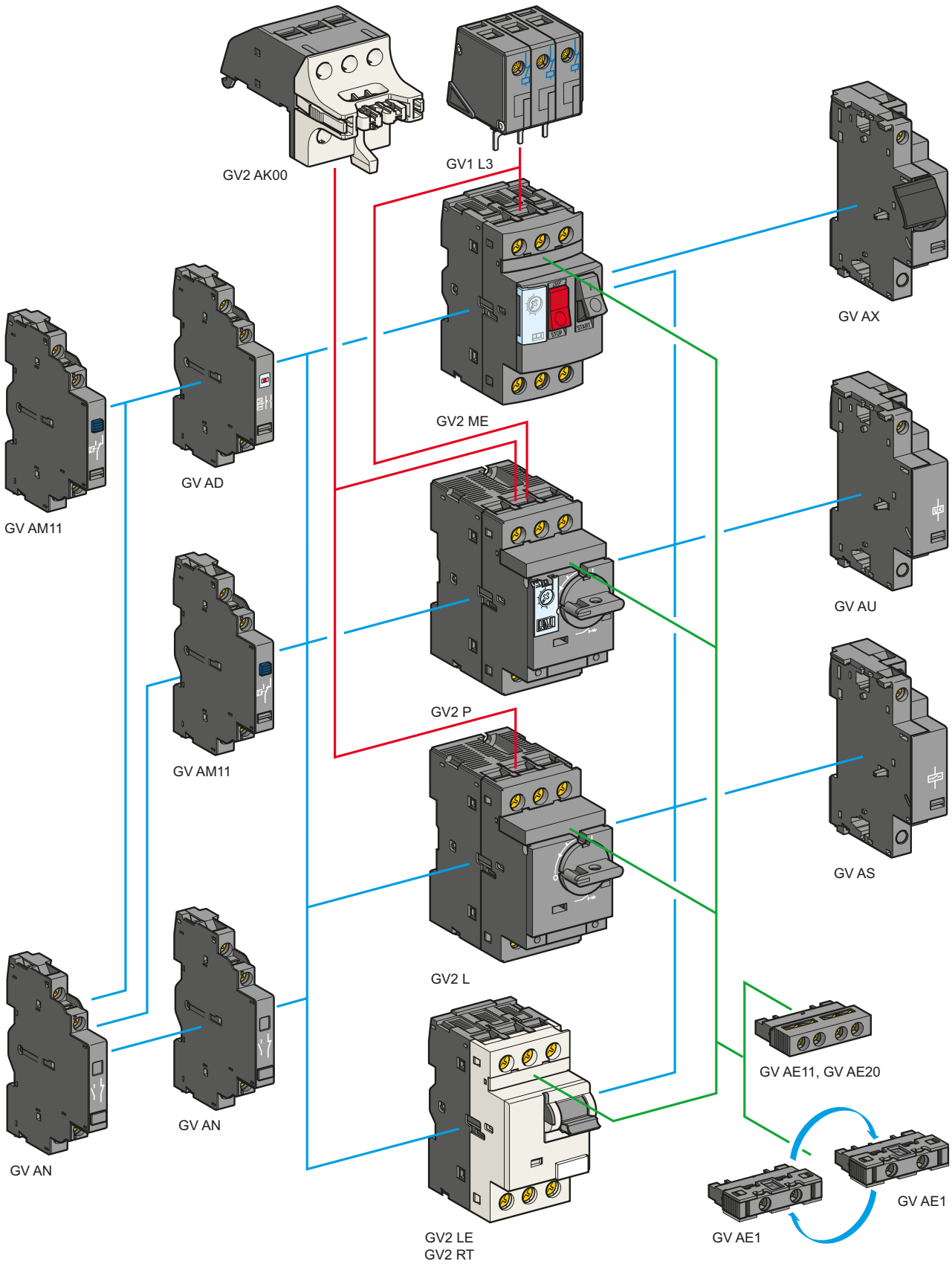
DB439407.eps
GV2 AK00
GV1 L3
GV AX
GV2 ME
GV AD
GV AM11
GV AU
GV2 P
GV AM11
GV AS
GV2 L
GV AE11, GV AE20
GV AN
GV AN
GV AE1
GV AE1
GV2 LE
GV2 RT

Contact blocks

Description	Mounting	Maximum number	Type of contacts		Sold in lots of	Unit reference
Instantaneous auxiliary contacts	Front (1)	1	N/O or N/C (2)		10	**GVAE1**
			N/O + N/C		10	**GVAE11**
			N/O + N/O		10	**GVAE20**
	Side (LH)	2	N/O + N/C		1	**GVAN11**
			N/O + N/O		1	**GVAN20**
Fault signalling contact + instantaneous auxiliary contact	Side (3) (LH)	1	N/O (fault)	+ N/O	1	**GVAD1010**
				+ N/C	1	**GVAD1001**
			N/C (fault)	+ N/O	1	**GVAD0110**
				+ N/C	1	**GVAD0101**
Short-circuit signalling contact	Side (LH)	1	C/O common point		1	**GVAM11**

Electric trips

Mounting	Voltage		Reference
Undervoltage or shunt trips (4)			
Side (1 block on RH side of circuit breaker)	24 V	50 Hz	**GVA●025**
		60 Hz	**GVA●026**
	48 V	50 Hz	**GVA●055**
		60 Hz	**GVA●056**
	100 V	50 Hz	**GVA●107**
	100…110 V	60 Hz	**GVA●107**
	110…115 V	50 Hz	**GVA●115**
		60 Hz	**GVA●116**
	120…127 V	50 Hz	**GVA●125**
	127 V	60 Hz	**GVA●115**
	200 V	50 Hz	**GVA●207**
	200…220 V	60 Hz	**GVA●207**
	220…240 V	50 Hz	**GVA●225**
		60 Hz	**GVA●226**
	380…400 V	50 Hz	**GVA●385**
		60 Hz	**GVA●386**
	415…440 V	50 Hz	**GVA●415**
	415 V	60 Hz	**GVA●416**
	440 V	60 Hz	**GVA●385**
	480 V	60 Hz	**GVA●415**
	500 V	50 Hz	**GVA●505**
	600 V	60 Hz	**GVA●505**
Undervoltage trip, INRS (can only be mounted on GV2ME) Safety device for dangerous machines conforming to INRS and VDE 0113			
Side (1 block on RH side of circuit breaker GV2ME)	110…115 V	50 Hz	**GVAX115**
		60 Hz	**GVAX116**
	127 V	60 Hz	**GVAX115**
	220…240 V	50 Hz	**GVAX225**
		60 Hz	**GVAX226**
	380…400 V	50 Hz	**GVAX385**
		60 Hz	**GVAX386**
	415…440 V	50 Hz	**GVAX415**
	440 V	60 Hz	**GVAX385**

PB111870.eps



GV1L3

Limiter blocks

Description	Mounting	Maximum number	Reference
Visible isolation block (5)	Front (1)	1	**GV2AK00 (6)**
Limiters	At top (GV2ME and GV2P) for circuit breakers with screw clamp connections	1	**GV1L3**
	Independent (7)	1	**LA9LB920**

PB138227.eps



LA9LB920

*(1) Mounting of a **GVAE** contact block or a **GV2AK00** visible isolation block on **GV2P** and **GV2L**.*
(2) Choice of N/C or N/O contact operation, depending on which way round the reversible block is mounted.
*(3) The **GVAD** is always mounted next to the circuit breaker.*
*(4) To order an undervoltage trip: replace the dot (●) in the reference with a **U**, example: **GVAU025**.*
*To order a shunt trip: replace the dot (●) in the reference with an **S**, example: **GVAS025**.*
*(5) Visible isolation of the 3 poles upstream of circuit breaker **GV2P** and **GV2L**.*
(6) Ie Max = 32 A.
*(7) For more information about the current limiter **LA9LB920**, see pages A4/31 and A4/63.*

Characteristics: pages B6/87 to B6/89
Dimensions, schemes: pages B6/90 to B6/99

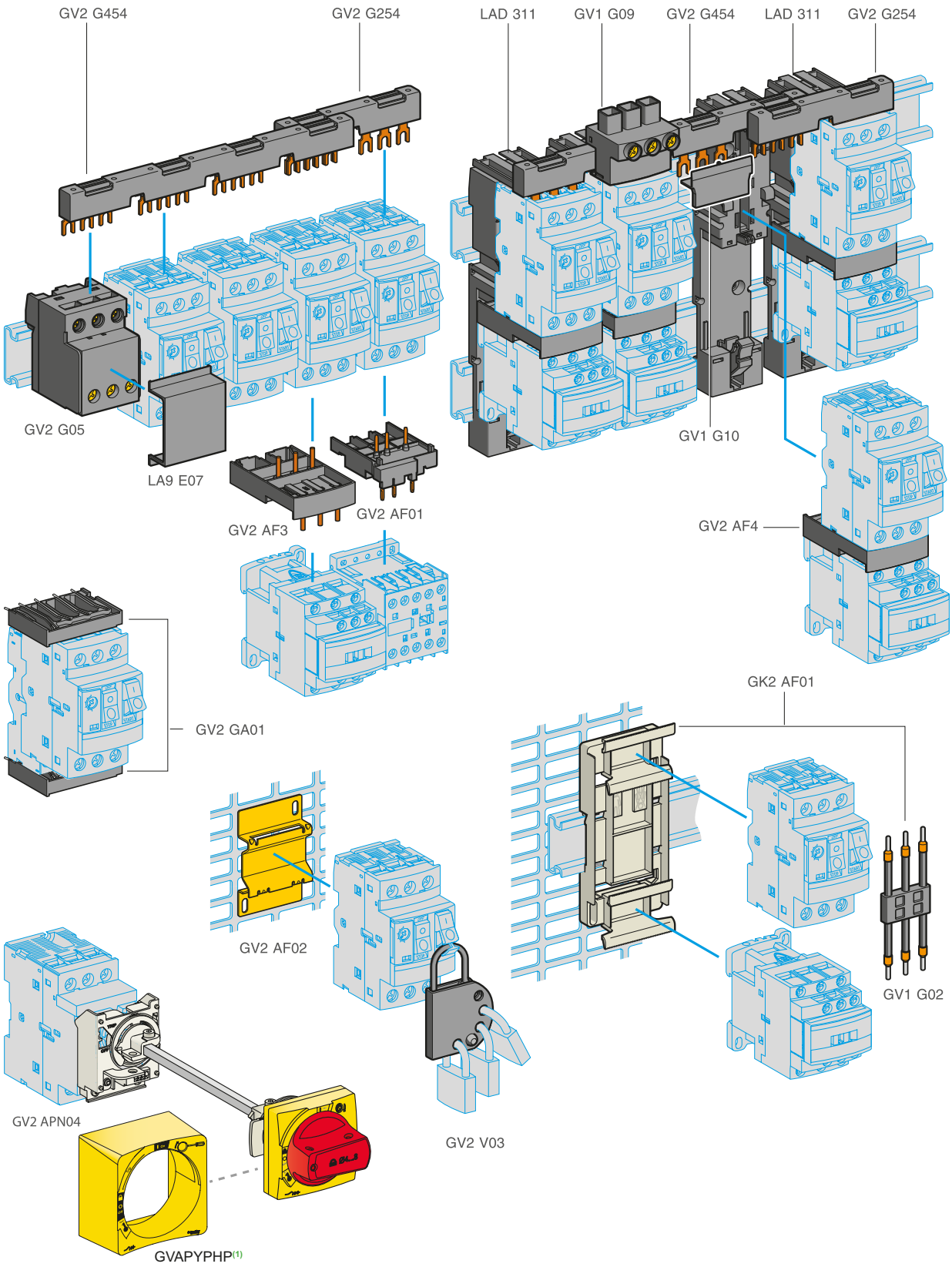

(1) Standard front plate must be removed from the assembly and replaced by Protective front plate (GVAPYPHP).

Life Is On Schneider Electric

Product references

Accessories for circuit breakers with screw clamp connections

Description	Application	Sold in lots of	Unit reference
Adapter plates	For mounting a GV2 by screw fixing	10	**GV2AF02**
	For mounting a GV2ME and contactor LC1D09…D38 with front faces aligned	1	**LAD311**
Height compensation plate	7.5 mm to align GV2ME-GV2LE and GV2P-GV2L and allow the use of a common GV2G●●● busbar	10	**GV1F03**
Combination blocks	Between GV2 and contactor LC1K or LP1K	10	**GV2AF01**
	Between GV2 and contactor LC1D09…D38	10	**GV2AF3**
	Between GV2 mounted on LAD311 and contactor LC1D09…D38	10	**GV2AF4**
Motor starter adapter plate	With 3-pole connection for mounting a GV2 and a contactor LC1D09…D25	1	**GK2AF01**

Description	Application	Pitch	Reference
		mm	
Sets of 3-pole Ie = 63 A busbars	2 tap-offs	45	**GV2G245**
		54	**GV2G254**
		72	**GV2G272**
	3 tap-offs	45	**GV2G345**
		54	**GV2G354**
	4 tap-offs	45	**GV2G445**
		54	**GV2G454**
		72	**GV2G472**
	5 tap-offs	54	**GV2G554**

PB119241.eps



GV1G09

Description	Ie	Application	Sold in lots of	Unit reference
	A			
Protective end cover	-	For unused busbar outlets	5	**GV1G10**
Terminal block for supply to one or more GV2G busbar sets	63	Connection from the top	1	**GV1G09**
	63	Can be fitted with current limiter GV1L3 (GV2ME and GV2P)	1	**GV2G05**
Cover for terminal block	-	For mounting in modular panels	10	**LA9E07**
Flexible 3-pole connection for connecting a GV2 to a contactor LC1D09…D25	25	Centre distance between mounting rails: 100…120 mm	10	**GV1G02**
"Large Spacing" adapter UL 60947-4-1 type E	-	For GV2P●● (except 32 A)	1	**GV2GH7**
Clip-in marker holders (supplied with each circuit breaker)	-	For GV2P, GV2L, GV2LE and GV2RT (8 x 22 mm)	100	**LA9D92**

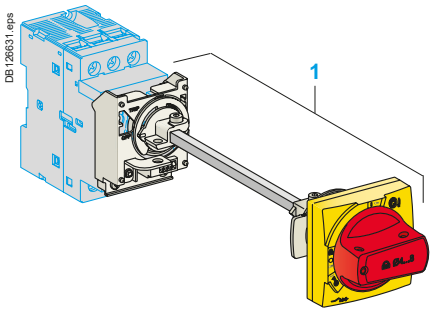

Extended Rotary Handle

Allows a circuit breaker or a starter-controller installed in back of an enclosure to be operated from the front of the enclosure.
A rotary handle can be black or red/yellow, IP54 or IP65. It includes a function for locking the circuit breaker or the starter in the O (Off) for red/yellow handle, in the O (Off) or I (On) for black handle, by means of up to 3 padlocks with a shank diameter of 4 to 8 mm. The extended shaft must be adjusted to use in different size enclosures. The IP54 rotary handle is fixed with a nut (Ø22) to make easier the assembling. The new Laser Square tool brings the accuracy to align the circuit breaker and the rotary handle.

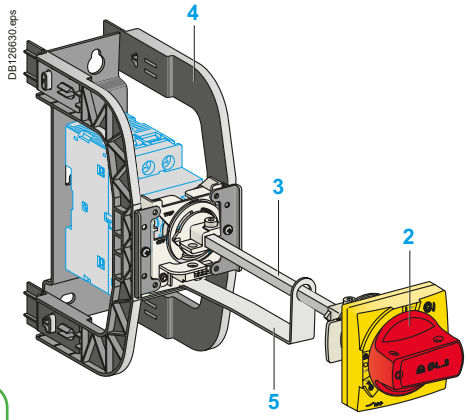

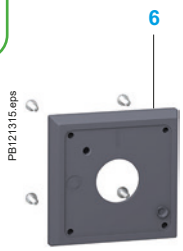

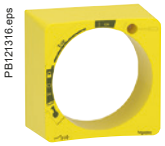

GVAPYPHP



Padlockable external operators for ref. GV2P and GV2L

Description

1 Kit handle + mounting system
2 Universal handle
3 Shaft
4 Bracket
5 Shaft support plate for deep enclosure
6 Retrofit accessory
7 Laser Square accessory

Kit handle + mounting system

Description		Item	Reference
For GV2P/L	Black handle, front plate, with trip status, IP 54	1	**GV2APN01**
	Red handle, front plate, with trip status, IP 54	1	**GV2APN02**
	Black handle, front plate, without trip status, IP 65	1	**GV2APN03**
	Red handle, front plate, without trip status, IP 65	1	**GV2APN04**
For GV2LE	Padlocking in “On” and “Off” position Black handle, blue front plate, IP 54	-	**GV2AP03**

Universal handle

For GV2P/L	Black handle, with trip status, IP54	2	**GVAPB54**
	Red handle, with trip status, IP54	2	**GVAPR54**
	Red handle, without trip status, IP65	2	**GVAPR65**

External handle protection frame

For GV2P/L	Yellow frame	1	**GVAPYPHP**
	Black frame	1	**GVAPBPHP**

Shaft

For GV2P/L	L = 315 mm	3	**GVAPA1**

Bracket

For GV2P/L		4	**GVAPH02**

Shaft support plate for deep enclosure

For GV2P/L	Depth ⩾ 250 mm	5	**GVAPK11**

Retrofit accessory

For GV2P/L		6	**GVAPP1**

Laser Square accessory

For GV2P/L		7	**GVAPL01**

Sticker		Sold in lots of		
	For German	10	-	**GVAPSDE**
	For Chinese	10	-	**GVAPSCN**
	For Portuguese	10	-	**GVAPSPT**
	For Italian	10	-	**GVAPSIT**

Padlocking device

Description		Reference
For all GV2 device	For use with up to 4 padlocks, Ø6 mm shank max. (padlocks not included)	**GV2V03**

Dimensions, schemes:
page B6/91

TeSys Deca
- Frame 3
11 to 45 kW



Product references

PB121697.tif



GV3L25

Motor circuit breakers from 11 to 45 kW

Deca - Frame 3 (ref. GV3L): control by rotary knob, connection by EverLink® BTR screw connectors

Standard power ratings of 3-phase motors 50/60 Hz in category AC-3									Magnetic protection rating	Tripping current Id ± 20 %	Use in association with thermal overload relay (class 10 A)	Reference
400/415 V			500 V			690 V						
P	Icu	Ics (1)	P	Icu	Ics (1)	P	Icu	Ics (1)				
kW	kA		kW	kA		kW	kA		A	A		
11	100	100	**15**	12	50	**18.5**	6	50	25	350	LRD325	**GV3L25**
15	100	100	**18.5**	12	50	**22**	6	50	32	448	LRD332	**GV3L32**
18.5	50	100	**22**	12	50	**37**	6	50	40	560	LRD340	**GV3L40**
22	50	100	**30**	12	50	**45**	6	50	50	700	LRD350	**GV3L50**
30	50	100	**37**	12	50	**55**	6	50	65	910	LRD365	**GV3L65**
37	50	60	**45**	12	50	**55**	6	50	73	1120	LRD380	**GV3L73**
45	50	60	**45**	12	50	**55**	6	50	80	1120	LRD380	**GV3L80**(2)

Connection by lugs

To order these circuit breakers with connection by lugs, add the digit **6** to the end of reference selected above.
Example: ref. **GV3L32** becomes **GV3L326**.

(1) As % of Icu. Associated current limiter or fuses, where required.
(2) 750 A Lock Rotor Current max.
★ > 100 kA.

Characteristics: pages B6/102 to B6/104
Curves: pages B6/106 to B6/108
Dimensions, schemes: pages B6/115 to B6/117

Product references

PB121680.tif



GV3P80

PB121675.eps



GV3P651

PB121703.eps



GV3P736

Motor circuit breakers up to 45 kW / 400 V

Standard power ratings of 3-phase motors 50/60 Hz in category AC-3									Setting range of thermal trips (2)	Magnetic tripping current Id ± 20 %	Reference
400/415 V			500 V			690 V					
P	Icu	Ics (1)	P	Icu	Ics (1)	P	Icu	Ics (1)			
kW	kA	%	kW	kA	%	kW	kA	%	A	A	
Deca - Frame 3 (ref. GV3P): control by rotary knob											
Connection by EverLink® BTR screw connectors (3)											
5.5	100	100	**7.5**	12	50	**11**	6	50	9…13	182	**GV3P13**
7.5	100	100	**9**	12	50	**15**	6	50	12…18	252	**GV3P18**
11	100	100	**15**	12	50	**18.5**	6	50	17…25	350	**GV3P25**
15	100	100	**18.5**	12	50	**22**	6	50	23…32	448	**GV3P32**
18.5	50	100	**22**	12	50	**37**	6	50	30…40	560	**GV3P40**
22	50	100	**30**	12	50	**45**	6	50	37…50	700	**GV3P50**
30	50	100	**45**	12	50	**55**	6	50	48…65	910	**GV3P65**
37	50	60	**45**	12	50	**55**	6	50	62...73	1120	**GV3P73**
45	50	60	**45**	12	50	**55**	6	50	70...80	1120	**GV3P80 (4)**

Connection by EverLink® BTR screw connectors, for assembly with a contactor

To assemble a **GV3P32** to **P73** circuit breaker with an **LC1D40A** to **D73A** contactor, it is possible to use the circuit breaker supplied without downstream EverLink® power terminal block. To order this product, add the digit **1** to the end of the references selected above. Example: ref. **GV3P73** becomes **GV3P731**. Do not use direct mounting between **GV3P80** and **LC1D80A** because of potential overheating, use cable link.

Connection by lugs

To order thermal magnetic circuit breakers with connection by lugs, add the digit **6** to the end of reference selected above. Example: **GV3P25** becomes **GV3P256.**

Motor circuit breakers up to 40 HP / 460 V, UL 60947-4-1 type E

Deca - Frame 3 - ref. GV3P13 (5) to GV3P65 (5)

To obtain a motor-circuit breaker **GV3P**, UL 60947-4-1 type E, use the following with the circuit breaker:

- a "Large Spacing" cover **GV3G66**,
- a short-circuit signalling contact **GVAM11**.

Motor circuit breakers from 7.5 to 50 HP / 460 V, with screw clamp terminals

Deca - Frame 3 (ref. GV3P) with rotary handle

Thermal setting (A)	Maximum Horsepower ratings (6)						Reference
	Single-Phase		Three-Phase				
	115 V	230 V	200 V	230 V	460 V	575 V	
9…13	1/2	1.5	3	3	7.5	10	**GV3P13**
12…18	3/4	2	3	5	7.5	10	**GV3P18**
17…25	1.5	3	5	7.5	15	20	**GV3P25**
23…32	2	3	7.5	7.5	20	25	**GV3P32**
30…40	3	5	10	10	25	30	**GV3P40**
37…50	3	7.5	10	10	30	40	**GV3P50**
48…65	3	10	15	15	40	50	**GV3P65**
62…73	5	15	20	25	50	60	**GV3P73**

Deca - Frame 3 - ref. GV3P13 to GV3P65 - with connection by lugs (5)

To obtain a motor-circuit breaker ref. **GV3P**, UL 60947-4-1 type E, with connection by lugs, add the digit **6** to the end of reference selected above and use the following with the circuit breaker:

- two IP 20 covers **LAD96570**,
- a short-circuit signalling contact **GVAM11**.

(1) As % of Icu.
(2) The thermal trip setting must be within the range marked on the graduated knob.
(3) BTR screws: hexagon socket head. Require use of an insulated Allen key, in compliance with local wiring regulations.
(4) For applications with stable full load current with maximum 80 A and Lock Rotor Current maximum 750 A.
(5) Accessories: see page B6/30.
(6) 3P FLA corresponding values: see page A5/84.

Motor circuit breakers

Characteristics: pages B6/102 to B6/105
Curves: pages B6/109 to B6/111
Dimensions, schemes: pages B6/115 and B6/117

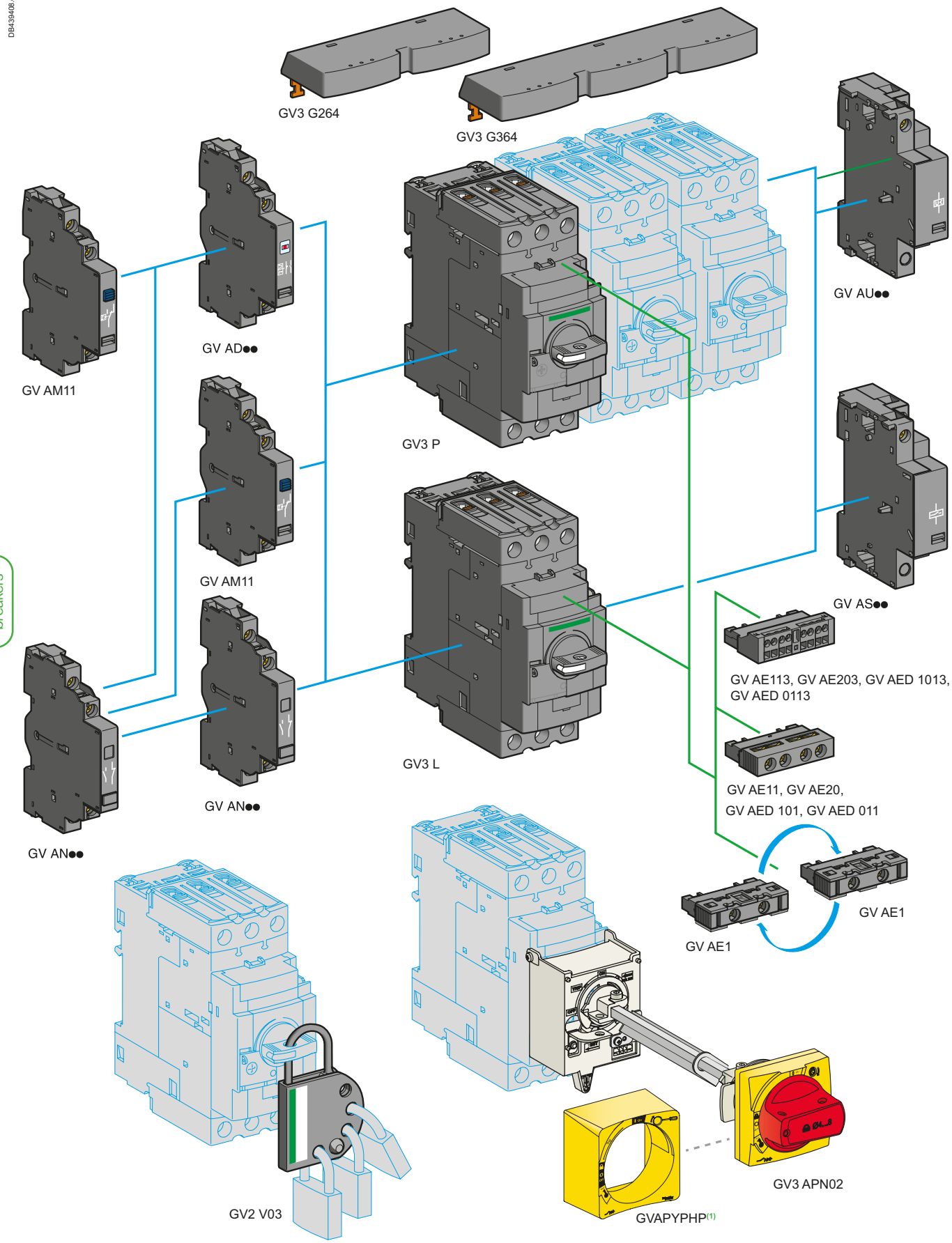

(1) Standard front plate must be removed from the assembly and replaced by Protective front plate (GVAPYPHP).

Life Is On Schneider Electric

Product references

Contact blocks

Description	Mounting	Maximum number	Type of contacts		Sold in lots of	Unit reference
Instantaneous auxiliary contacts	Front	1	N/O or N/C (1)		10	**GVAE1**
			N/O + N/C		10	**GVAE11** (2)
			N/O + N/O		10	**GVAE20** (2)
	Side (LH)	2	N/O + N/C		1	**GVAN11** (2)
			N/O + N/O		1	**GVAN20** (2)
Fault signalling contact + instantaneous auxiliary contact	Front	1	N/O (fault)	+ N/O	1	**GVAED101** (2)
			N/O (fault)	+ N/C	1	**GVAED011** (2)
	Side (3) (LH)	1	N/O (fault)	+ N/O	1	**GVAD1010**
				+ N/C	1	**GVAD1001**
			N/C (fault)	+ N/O	1	**GVAD0110**
				+ N/C	1	**GVAD0101**
Short-circuit signalling contact	Side (LH)	1	C/O common point		1	**GVAM11**

Electric trips - undervoltage or shunt (4)

Mounting	Voltage		Reference
Side (1 block on RH side of circuit breaker)	24 V	50 Hz	**GVA●025**
		60 Hz	**GVA●026**
	48 V	50 Hz	**GVA●055**
		60 Hz	**GVA●056**
	100	50 Hz	**GVA●107**
	100…110 V	60 Hz	**GVA●107**
	110…115 V	50 Hz	**GVA●115**
		60 Hz	**GVA●116**
	120…127 V	50 Hz	**GVA●125**
	127 V	60 Hz	**GVA●115**
	200 V	50 Hz	**GVA●207**
	200…220 V	60 Hz	**GVA●207**
	220…240 V	50 Hz	**GVA●225**
		60 Hz	**GVA●226**
	380…400 V	50 Hz	**GVA●385**
		60 Hz	**GVA●386**
	415…440 V	50 Hz	**GVA●415**
	415 V	60 Hz	**GVA●416**
	440 V	60 Hz	**GVA●385**
	480 V	60 Hz	**GVA●415**
	500 V	50 Hz	**GVA●505**
	600 V	60 Hz	**GVA●505**

Accessories

Description			Reference
Set of 3-pole busbars **Ie = 115 A** Pitch: 64 mm	2 tap-off	GV3P●● and GV3L●●	**GV3G264**
	3 tap-off	GV3P●● and GV3L●●	**GV3G364**
Cover "Large Spacing" UL 60947-4-1 type E (Only one cover required on supply side)		GV3P●●	**GV3G66**

PB108356.eps



GV3G66

(1) Choice of N/C or N/O contact operation, depending on which way round the reversible block is mounted.
*(2) Contact blocks available in version with spring terminal connections. Add a figure **3** at the end of the references selected above. Example: **GVAED101** becomes **GVAED1013**.*
*(3) The **GVAD●●** is always mounted next to the circuit breaker.*
*(4) To order an undervoltage trip: replace the dot (●) in the reference with a **U**, example: **GVAU025**. To order a shunt trip: replace the dot (●) in the reference with an **S**, example: **GVAS025**.*

PB121324.eps



LV426992



LV426990

Limited torque throwaway bits

Torque limiting breakaway bits

Description	Sold in lots of	Reference
5 N.m Yellow	6	**LV426992**
9 N.m Green	6	**LV426990**

Characteristics: pages B6/112 to B6/114
Schemes: page B6/117

Product references

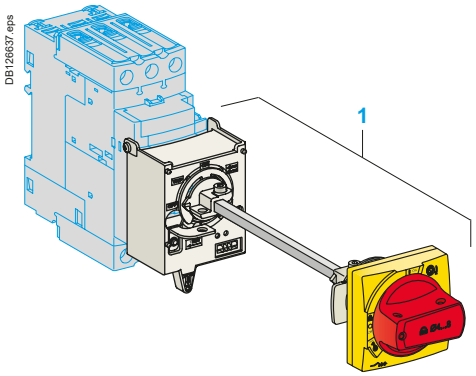

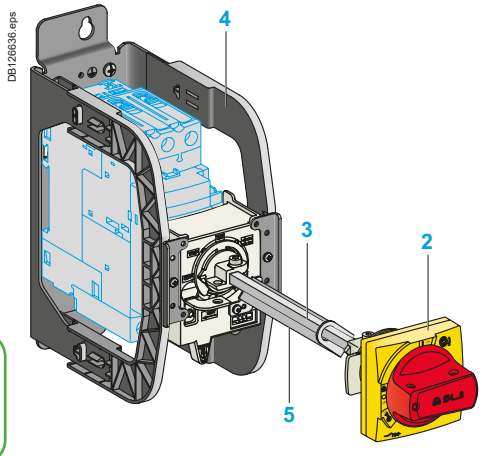

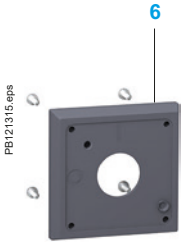

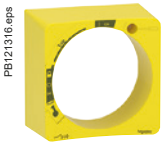

GVAPYPHP



Extended Rotary Handle

Allows a circuit breaker or a starter-controller installed in back of an enclosure to be operated from the front of the enclosure.
A rotary handle can be black or red/yellow, IP54 or IP65. It includes a function for locking the circuit breaker or the starter in the O (Off) or I (On) position (depending of the type of rotary handle) by means of up to 3 padlocks with a shank diameter of 4 to 8 mm. The extended shaft must be adjusted to use in different size enclosures. The IP54 rotary handle is fixed with a nut (Ø22) to make easier the assembling. The new Laser Square tool brings the accurency to align the circuit breaker and the rotary handle.

Padlockable external operators for Deca - Frame 3

Description

1 Kit handle + mounting system
2 Universal handle
3 Shaft
4 Bracket
5 Shaft support plate for deep enclosure
6 Retrofit accessory
7 Laser Square accessory

Kit handle + mounting system				
Description			**Item**	**Reference**
For GV3P/L	Black handle, front plate, with trip status, IP 54		1	**GV3APN01**
	Red handle, front plate, with trip status, IP 54		1	**GV3APN02**
	Black handle, front plate, without trip status, IP65		1	**GV3APN03**
	Red handle, front plate, without trip status, IP 65		1	**GV3APN04**
Universal handle				
For GV3P/L	Black handle, with trip status, IP54		2	**GVAPB54**
	Red handle, with trip status, IP54		2	**GVAPR54**
	Red handle, without trip status IP65		2	**GVAPR65**
External handle protection frame				
For GV2P/L	Yellow frame		1	**GVAPYPHP**
	Black frame		1	**GVAPBPHP**
Shaft				
For GV3P/L	L = 315 mm		3	**GVAPA1**
Shaft support plate for deep enclosure				
For GV3P/L	Depth ≥ 300 mm		5	**GVAPK12**
Retrofit accessory				
For GV3P/L			6	**GVAPP1**
Laser Square accessory				
For GV3P/L			7	**GVAPL01**
Sticker		**Sold in lots of**		
Warning label	For German	10	-	**GVAPSDE**
	For Chinese	10	-	**GVAPSCN**
	For Portuguese	10	-	**GVAPSPT**
	For Italian	10	-	**GVAPSIT**

Dimensions, schemes:
pages B6/116

TeSys Deca
- Frame 4
0.25 to 55 kW - 1/2 to 60 HP



Protection

TeSys Deca - Frame 4 motor circuit breakers covers motor protection from 0.25 to 55 kW at 415 V AC (from 0.8 to 115 A) in one frame and are available in 3 breaking capacities: 25, 50 and 100 kA at 415 V AC IEC (15, 35, 65 kA at 480 V UL).

TeSys Deca - Frame 4 motor circuit breakers are available with 3 types of protection:
- Magnetic ref. GV4L: to be used with an overload relay or a drive
- Thermal magnetic ref. GV4P: electronic protection with wide range setting, dual class (10 & 20)
- Multifunction motor protection ref. GV4PEM: ref. GV4P with adjustable advanced protections and possibility to have

a side module SDx for alarming and motor functional fault differentiation.

Power connection

TeSys Deca - Frame 4 motor circuit breaker come in standard with 2-holes EverLink™ power connectors with creep (1) compensation for bare copper cables. This Schneider Electric patended technique makes it possible to achieve accurate and durable tightening torque in order to avoid cable creep.
Products may be delivered with connectors for bars or cables with compression lugs (except ref. GV4PB).
Whatever, the connectors are field interchangeables and can be removed for the installation of one of both.
And to tight at the right torque power connections particularly in the field, torque limiting breakaway bits may be used.

DB425664.eps

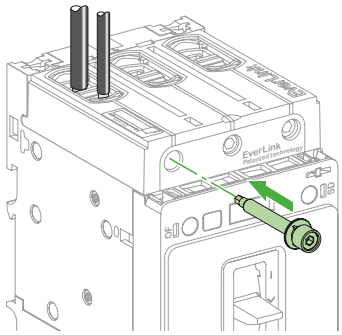

DB425926.eps

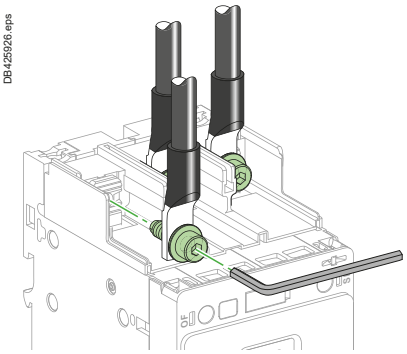

Mounting

TeSys Deca - Frame 4 motor circuit breaker can be mounted on a backplate or on a DIN rail (35 or 75 mm).

Handle

TeSys Deca - Frame 4 motor circuit breaker can be ordered with a toggle or a direct rotary handle (except for ref. GV4P Multifunction).
It is also possible to equip a toggle one with a direct rotaty handle, or a front extended one, or a side one.

Auxiliaries

TeSys Deca - Frame 4 circuit breakers can be equiped with an open/close (OF) contact and a trip indication (SD) contact. These contacts are common point changeover type, with a normaly open (NO) and a normaly closed (NC) contact. TeSys Deca - Frame 4 motor circuit breaker may be equiped too with an MN (undervoltage release) or MX (shunt trip) coil.

Ref. GV4P Multifunction circuit breakers can be equiped with 1 or 2 SDx module(s) in order to have alarming and motor functional fault differentiation (SDx - See page B6/44)

Auxiliaries have spring connections for cables up to 1.5 mm².

DB424978.eps **OF** **SD**

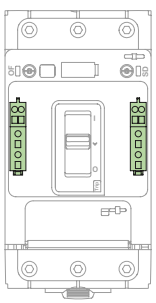

DB424979.eps **MN/MX**

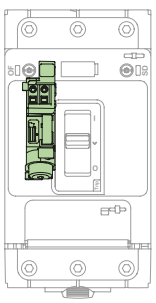

DB425752.eps **SDx**

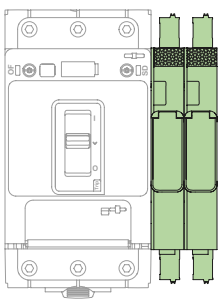

(1) Creep: normal crushing phenomenon of condustors, that is accentuated over time.

Introduction

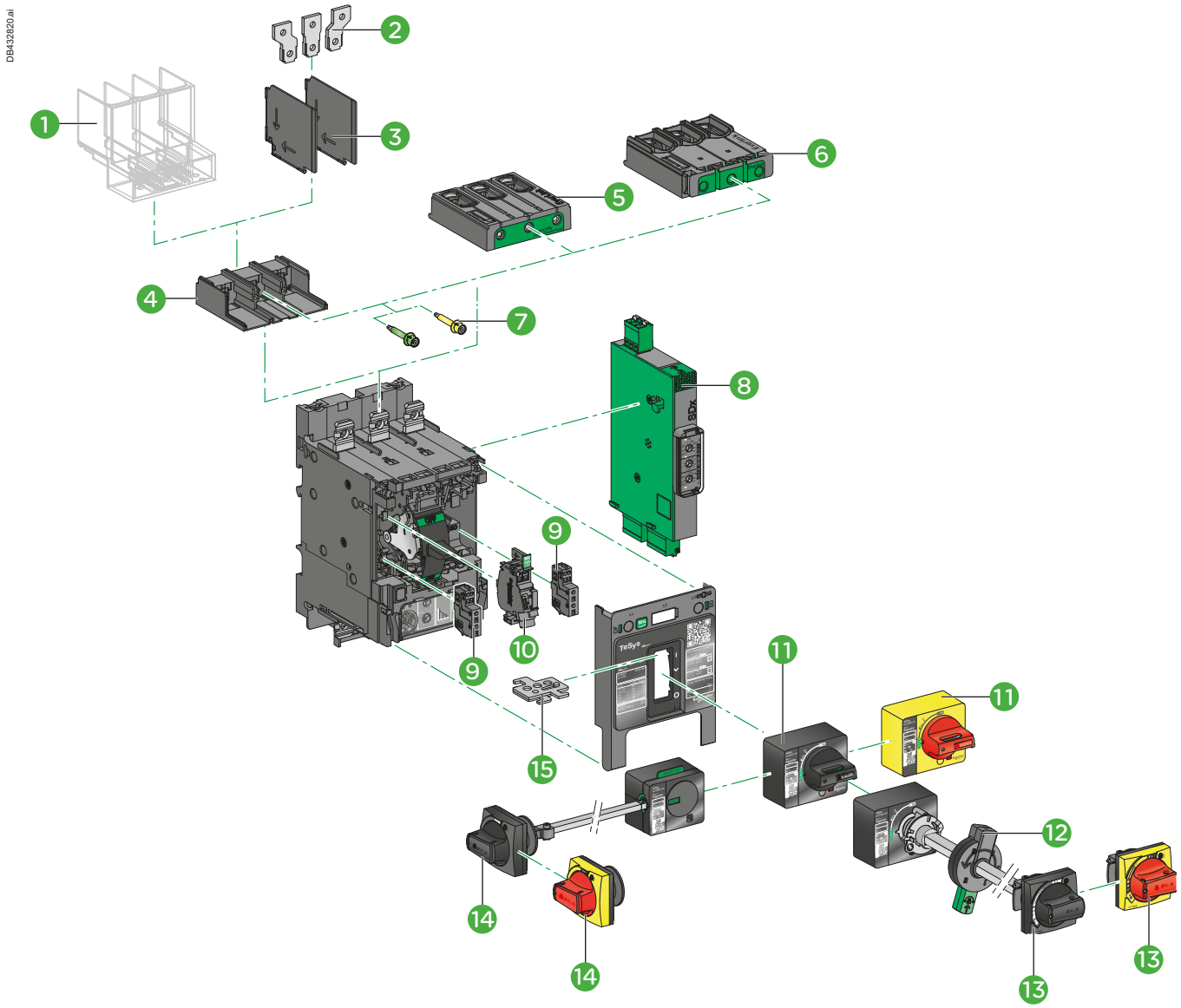

1 Long terminal shield **LAD96590**
2 Terminal spreaders **LV426940**
3 Interphases barriers **LV426920**
4 Crimp lug connector **GV4LUG**
5 EverLink® connector **LAD96595**
6 Everlink® terminals and large spacing cover **GV4G66 + LAD96595**
7 Torque limiting breakaway bits **LV42699●**
8 SDx alarming/fault differentiation module **GV4ADM1111** (only with GV4PEM)
9 Auxiliary contact block for OF or SD function **GV4AE11**
10 - MN undervoltage release **GV4AU●●**
- MX shunt trip **GV4AS●●**
11 Direct mounting black or red on yellow bezel rotary handle **GV4ADN01/ GV4ADN02**
12 Open door shaft operator (for front extended rotary handle) **LV426937**
13 Front extended rotary handle kit with red handle on yellow bezel or black handle **GV4APN01/ GV4APN02 /GV4APN04**
14 Side rotary handle kit with red handle on yellow bezel or black handle **LV426935/LV426936**.
15 Toggle locking device **29370**

Introduction

PB114910.eps



GV4L

PB114909.eps



GV4LE

Standard version

Protection
Setting is made using dial.

Trip class (class)
Ref. GV4L can be used with class 5, 10 or 20 relay.

Short circuit protection (Ii)
Protection with an adjustable pick-up **Ii = 6 to 14 In**. Settings are made in amperes.

Standards and certifications
IEC/EN 60947-1, IEC/EN 60947-2, CCC, EAC.

References: page B6/35
Characteristics: pages B6/120 to B6/122
Curves: pages B6/124 to B6/128
Dimensions, schemes: pages B6/134, B6/135, B6/137

Product references

Magnetic motor circuit breakers from 0.25 to 55 kW

Standard power ratings of 3-phase motors - 50 / 60 Hz									In	Magnetic setting range (Ii)	Use in association with overload relay Class 10 or 20	Reference with EverLink terminals	
400/415 V			500 V			690 V							
P	Icu	Ics (1)	P	Icu	Ics (1)	P	Icu	Ics (1)				with toggle	with rotary handle
kW	kA	%	kW	kA	%	kW	kA	%	A	A			
0.25... 0.75	25	100	**0.37... 1.1**	10	100	**0.55... 1.5**	-	-	2	12... 28	LRD05 (0.63... 1A) LRD06 (1... 1.6A) LRD07 (1.6... 2.5A)	-	-
	50	100		25	100		8	25				**GV4LE02N**	**GV4L02N**
	100	100		30	100		10	25				**GV4LE02S**	-
0.55... 1.5	25	100	**0.75... 1.5**	10	100	**1.1... 2.2**	-	-	3,5	21... 49	LRD07 (1.6... 2.5A) LRD08 (2.5... 4A)	-	-
	50	100		25	100		8	25				**GV4LE03N**	**GV4L03N**
	100	100		30	100		10	25				**GV4LE03S**	-
1.5... 3	25	100	**2.2... 4**	10	100	**3... 7.5**	-	-	7	42... 98	LRD08 (2.5... 4A) LRD10 (4...6A)	-	-
	50	100		25	100		8	25				**GV4LE07N**	**GV4L07N**
	100	100		30	100		10	25				**GV4LE07S**	-
3... 5.5	25	100	**3... 7.5**	10	100	**5.5... 11**	-	-	12,5	75... 175	LRD12 (5.5... 8A) LRD14 (7... 10A) LRD313 (9...13A)	-	-
	50	100		25	100		8	25				**GV4LE12N**	**GV4L12N**
	100	100		30	100		10	25				**GV4LE12S**	-
5.5... 11	25	100	**7.5... 15**	10	100	**7.5... 18.5**	-	-	25	150... 350	LRD318 (12... 18A) LRD325 (17... 25A)	**GV4LE25B**	**GV4L25B**
	50	100		25	100		8	25				**GV4LE25N**	**GV4L25N**
	100	100		30	100		10	25				**GV4LE25S**	-
11... 22	25	100	**15... 30**	10	100	**18.5... 45**	-	-	50	300... 700	LRD332 (23... 32A) LRD340 (30... 40A) LRD350 (37... 50A)	**GV4LE50B**	**GV4L50B**
	50	100		25	100		8	25				**GV4LE50N**	**GV4L50N**
	100	100		30	100		10	25				**GV4LE50S**	-
18.5... 37	25	100	**22... 55**	10	100	**30... 55**	-	-	80	480... 1120	LRD365 (48... 65A) LRD3363 (63... 80A)	**GV4LE80B**	**GV4L80B**
	50	100		25	100		8	25				**GV4LE80N**	**GV4L80N**
	100	100		30	100		10	25				**GV4LE80S**	**GV4L80S**
30... 55	25	100	**30... 75**	10	100	**45... 90**	-	-	115	690... 1610	LR9D5567 (60... 100A) LR9F5367 (60... 100A) LR9D5369 (90... 150A) LR9F5369 (90...150A)	**GV4LE115B**	**GV4L115B**
	50	100		25	100		8	25				**GV4LE115N**	**GV4L115N**
	100	100		30	100		10	25				**GV4LE115S**	**GV4L115S**

Connection by lugs

To order circuit breakers with connection by lugs, add the digit **6** to the end of reference selected above. Example: ref. **GV4LE02N** becomes **GV4LE02N6**.

(1) As % of Icu.

Characteristics:
pages B6/120 to B6/122

Curves:
pages B6/124 to B6/128

Dimensions, schemes:
pages B6/134, B6/135, B6/137

Introduction



GV4P



GV4PE

Standard version

Protection
Settings are made using dials.

Overload or thermal protection (Ir)
Inverse-time thermal protection against overloads with adjustable pick-up Ir.
Wide range setting made in amperes.
The tripping curve for the thermal protection, which indicates the time delay tr before tripping, is defined by the selected trip class.

Trip class (class)
The class is selected as a function of the normal motor starting time.
■ Class 10: starting time less than 10 s.
■ Class 20: starting time less than 20 s.
For a given class, it is necessary to check that all motor-feeder components are sized to carry the 7.2 Ir starting current without excessive temperature rise during the time corresponding to the class.

Short time delay protection (Isd)
Short time delay protection (around 100 ms) to let through motor starting currents, but to protect cables and motor starter devices and allow not to oversize them (particularly usefull for wide range settings circuit breakers).
Fixed pick-up **Isd = 13 Ir.**

Short-circuit protection (Ii)
Instantaneous protection with non-adjustable pick-up **Ii=17 In**.

Phase unbalance or phase loss (Iunbal, tunbal)
This function opens the circuit breaker if a phase unbalance occurs:
■ that is greater than the 30 % of Irms (fixed pick-up): **Iunbal**
■ following the non-adjustable time delay (**tunbal**) equal to:
□ 0.7 s during starting
□ 4 s during normal operation.
Phase loss is an extreme case of phase unbalance and leads to tripping under the same conditions.

Ground-fault protection (Ig, tg)
Residual type ground-fault protection:
■ fixed pick-up **Ig = In**
■ fixed time delay **tg = 0.1 s.**

Indications

Front indications
■ Green “Ready” LED: flashes slowly when the circuit breaker is ready to trip in the event of an abnormal deviation in engine operating conditions.
■ Red alarm LED: goes ON when the thermal image of the motor is greater than 95 % of the permissible temperature rise.

Standards and certifications

IEC/EN 60947-1, IEC/EN 60947-2, IEC/EN 60947-4-1, UL 60497-4-1, CSA 22.2 n° 60497-4-1, CCC, EAC, CSA (cCSAus).

Product references

Thermal magnetic motor circuit breakers from 0.25 to 55 kW

Standard power ratings of 3-phase motors - 50 / 60 Hz in category AC-3									Thermal setting range (Ir)	Reference with EverLink terminals	
400/415 V			500 V			690 V				with toggle	with rotary handle
P kW	Icu kA	Ics (1) %	P kW	Icu kA	Ics (1) %	P kW	Icu kA	Ics (1) %	A		
0.25... 0.75	25	100	0.37... 1.1	10	100	0.55... 1.5	-	-	0.8... 2	-	-
	50	100		25	100		8	25		GV4PE02N	GV4P02N
	100	100		30	100		10	25		GV4PE02S	-
0.55... 1.5	25	100	0.75... 1.5	10	100	1.1... 2.2	-	-	1.4... 3.5	-	-
	50	100		25	100		8	25		GV4PE03N	GV4P03N
	100	100		30	100		10	25		GV4PE03S	-
1.5... 3	25	100	2.2... 4	10	100	3... 7.5	-	-	2.9... 7	-	-
	50	100		25	100		8	25		GV4PE07N	GV4P07N
	100	100		30	100		10	25		GV4PE07S	-
3... 5.5	25	100	3... 7.5	10	100	5.5... 11	-	-	5... 12.5	-	-
	50	100		25	100		8	25		GV4PE12N	GV4P12N
	100	100		30	100		10	25		GV4PE12S	-
5.5... 11	25	100	7.5... 15	10	100	7.5... 18.5	-	-	10... 25	GV4PE25B	GV4P25B
	50	100		25	100		8	25		GV4PE25N	GV4P25N
	100	100		30	100		10	25		GV4PE25S	-
11... 22	25	100	15... 30	10	100	18.5... 45	-	-	20... 50	GV4PE50B	GV4P50B
	50	100		25	100		8	25		GV4PE50N	GV4P50N
	100	100		30	100		10	25		GV4PE50S	-
22... 37	25	100	30... 55	10	100	37... 55	-	-	40... 80	GV4PE80B	GV4P80B
	50	100		25	100		8	25		GV4PE80N	GV4P80N
	100	100		30	100		10	25		GV4PE80S	GV4P80S
37... 55	25	100	45... 75	10	100	75... 90	-	-	65... 115	GV4PE115B	GV4P115B
	50	100		25	100		8	25		GV4PE115N	GV4P115N
	100	100		30	100		10	25		GV4PE115S	GV4P115S

Thermal magnetic motor circuit breakers from 3/4 to 75 HP / 480 V

Single-Phase				3-Phase								Rating	Reference with EverLink terminals	
120 V		240 V		208 V		240 V		480 V		600 V			with toggle	with rotary handle
Power HP	FLA A	Power Hp	FLA A	Power Hp	FLA A	Power Hp	FLA A	Power Hp	FLA A	Power Hp	FLA A	A		
-	-	1/10	1.5	-	-	-	-	3/4	1.6	1	1.7	2	-	-
													GV4PE02N	GV4P02N
													GV4PE02S	-
1/10	3	1/4	2.9	1/2	2.4	3/4	3.2	2	3.4	2	2.7	3.5	-	-
													GV4PE03N	GV4P03N
													GV4PE03S	-
1/4	5.8	3/4	6.9	1-1/2	6.6	2	6.8	3	4.8	5	6.1	7	-	-
													GV4PE07N	GV4P07N
													GV4PE07S	-
1/2	9.8	1-1/2	10	3	10.6	3	9.6	7-1/2	11	10	11	12.5	-	-
													GV4PE12N	GV4P12N
													GV4PE12S	-
1-1/2	20	3	17	5	16.7	7-1/2	22	15	21	20	22	25	GV4PE25B	GV4P25B
													GV4PE25N	GV4P25N
													GV4PE25S	-
3	34	7-1/2	40	10	30.8	15	42	30	40	40	41	50	GV4PE50B	GV4P50B
													GV4PE50N	GV4P50N
													GV4PE50S	-
7-1/2	80	15	68	25	74.8	30	80	60	77	75	77	80	GV4PE80B	GV4P80B
													GV4PE80N	GV4P80N
													GV4PE80S	GV4P80S
10	100	20	88	30	88	40	104	75	96	100	99	115	GV4PE115B	GV4P115B
													GV4PE115N	GV4P115N
													GV4PE115S	GV4P115S

Connection by lugs

To order circuit breakers with connection by lugs, add the digit **6** to the end of reference selected above. Example: **GV4PE02N** becomes **GV4PE02N6**.

(1) As % of Icu.

Characteristics: pages B6/120 to B6/123
Curves: pages B6/129 to B6/131
Dimensions, schemes: pages B6/134, B6/135, B6/137

Introduction

PB114917.eps



GV4PEM

Advanced version

Basic protection
Settings are made using dials.

Overloads or thermal protection (Ir)
Inverse-time thermal protection against overloads with adjustable pick-up Ir.
Wide range setting made in amperes.
The tripping curve for the thermal protection, which indicates the time delay tr before tripping, is defined by the selected trip class.

Trip class (class)
The class is selected as a function of the normal motor starting time.
■ Class 10: starting time less than 10 s.
■ Class 20: starting time less than 20 s.
For a given class, it is necessary to check that all motor-feeder components are sized to carry the 7.2 Ir starting current without excessive temperature rise during the time corresponding to the class.

Short-circuit protection (Ii)
Instantaneous protection with non-adjustable pick-up **Ii = 17 In**.

Advanced protection

Settings are made with an Android smartphone with dedicated application and using wireless NFC (Near Field Communication), or a computer with EcoStruxure Power Commission software and the configuration/maintenance tool kit (“Maintenance case” TRV00910).
The LV434206 pocket battery allows the GV4PEM controller to be powered for adjustments and tests when no internal source is available.

Short time delay protection (Isd)
Short time delay protection (around 100 ms) to let through motor starting currents, but to protect cables and motor starter devices and allow not to oversize them (particularly usefull for wide range settings circuit breakers).
Adjustable pick-up **Isd = 5...13 Ir** (13 by default).

Phase unbalance or phase loss (Iunbal, tunbal)
This function opens the circuit breaker if a phase unbalance occurs:
■ that is greater than the 10…40 % of Irms (30% by default): **Iunbal**
■ following a time delay (**tunbal**) equal to:
□ 0.7 s during starting (non adjustable)
□ 1…10 s during normal operation (4 s by default).
Phase loss is an extreme case of phase unbalance and leads to tripping under the same conditions.

Ground-fault protection (Ig, tg)
Residual type ground-fault protection, with OFF position:
■ adjustable pick-up **Ig**:
□ 0.7…1 In for products with nominal current from 2 to 50 A
□ 0.4…1 In for products with nominal current from 80 to 115 A
■ adjustable time delay **tg** 0.1...0.4 s.

Jam (Ijam, tjam)
This function detects locking of the motor shaft caused by the load, with OFF position (OFF by default). During motor starting the function is disabled.
During normal operation, it causes tripping:
■ above the **Ijam** pick-up that can be fine-adjusted from 1.5 to 8 Ir
■ in conjunction with the **tjam** time delay that can be adjusted from 1 to 30 s.

Long start (Ilong, tlong)
This protection supplements thermal protection (class). It is used to optimize the protection according to the starting parameters, with OFF position (OFF by default).
It detects abnormal motor starting i.e. when the starting current remains too high or too low with respect to a pick-up value and a time delay.
It causes tripping:
■ in relation with a **Ilong** pick-up that can be fine-adjusted from 1.5 to 8 Ir
■ in conjunction with the **tlong** time delay that can be adjusted from 1 to 200 s.

Indications

Front indications
■ Green "Ready" LED: flashes slowly when the circuit breaker is ready to trip in the event of an abnormal deviation in engine operating conditions.
■ Red alarm LED: goes ON when the thermal image of the motor is greater than 95 % of the permissible temperature rise.

Remote indications via SDx module
See description on page B6/44.

Standards and certifications
IEC/EN 60947-1, IEC/EN 60947-2, IEC/EN 60947-4-1, UL 60497-4-1, CSA 22.2 n° 60497-4-1, CCC, EAC, CSA (cCSAus).

Product references

Advanced thermal magnetic motor circuit breakers from 0.25 to 55 kW

Standard power ratings of 3-phase motors - 50 / 60 Hz in category AC-3									Thermal setting range (Ir)	"Reference with EverLink terminals"
400/415 V			500 V			690 V				
P	Icu	Ics [1]	P	Icu	Ics [1]	P	Icu	Ics [1]		with toggle
kW	kA	%	kW	kA	%	kW	kA	%	A	
0.25... 0.75	25	100	**0.37... 1.1**	10	100	**0.55... 1.5**	-	-	0.8... 2	**-**
	50	100		25	100		8	25		**GV4PEM02N**
	100	100		30	100		10	25		**GV4PEM02S**
0.55... 1.5	25	100	**0.75... 1.5**	10	100	**1.1... 2.2**	-	-	1.4... 3.5	**-**
	50	100		25	100		8	25		**GV4PEM03N**
	100	100		30	100		10	25		**GV4PEM03S**
1.5... 3	25	100	**2.2... 4**	10	100	**3... 7.5**	-	-	2.9... 7	**-**
	50	100		25	100		8	25		**GV4PEM07N**
	100	100		30	100		10	25		**GV4PEM07S**
3... 5.5	25	100	**3... 7.5**	10	100	**5.5... 11**	-	-	5... 12.5	**-**
	50	100		25	100		8	25		**GV4PEM12N**
	100	100		30	100		10	25		**GV4PEM12S**
5.5... 11	25	100	**7.5... 15**	10	100	**7.5... 18.5**	-	-	10... 25	**GV4PEM25B**
	50	100		25	100		8	25		**GV4PEM25N**
	100	100		30	100		10	25		**GV4PEM25S**
11... 22	25	100	**15... 30**	10	100	**18.5... 45**	-	-	20... 50	**GV4PEM50B**
	50	100		25	100		8	25		**GV4PEM50N**
	100	100		30	100		10	25		**GV4PEM50S**
22... 37	25	100	**30... 55**	10	100	**37... 55**	-	-	40... 80	**GV4PEM80B**
	50	100		25	100		8	25		**GV4PEM80N**
	100	100		30	100		10	25		**GV4PEM80S**
37... 55	25	100	**45... 75**	10	100	**75... 90**	-	-	65... 115	**GV4PEM115B**
	50	100		25	100		8	25		**GV4PEM115N**
	100	100		30	100		10	25		**GV4PEM115S**

Connection by lugs

To order circuit breakers with connection by lugs, add the digit **6** to the end of reference selected above. Example: **GV4PE02N** becomes **GV4PE02N6**.

(1) As % of Icu.

Motor circuit breakers

Characteristics: pages B6/120 to B6/123
Curves: pages B6/129 to B6/131
Dimensions, schemes: pages B6/134, B6/135, B6/137

PB120622.eps



GV4PB

Advanced version

Ref. GV4PB is based on GV4PEM with specific tripping curve to follow UL489 SH supplement. It is designed with a large space connector in order to increase creepage and clearance distance.

Basic protection

Settings are made using dials.

Overloads or thermal protection (Ir)

Inverse-time thermal protection against overloads with adjustable pick-up Ir. Wide range setting made in amperes.

The tripping curve for the thermal protection, which indicates the time delay tr before tripping, is defined by the selected trip class.

Trip class (class)

The class is selected as a function of the normal motor starting time. It corresponds to the value of the tripping time delay for a current of 600 % of the rated tripping current according to UL489, SH supplement.

The rated tripping current is selected as 125 % of the dial value.

- Class 10: starting time less than 10 s.
- Class 20: starting time less than 20 s.

For a given class, it is necessary to check that all motor-feeder components are sized to withstand the 7.5 Ir starting current without excessive temperature rise during the time corresponding to the class.

Short-circuit protection (Ii)

Instantaneous protection with non-adjustable pick-up **Ii=17 In**.

Advanced protection (same as ref. GV4PEM)

Settings are made with:

- Android smartphone using wireless NFC (Near Field Communication), or EcoStruxure Power Device App. computer + EcoStruxure Power Commission software and configuration/maintenance tool kit TRV00910
- LV434206 pocket battery, allows the GV4PB controller to be powered for adjustment and test. LV434206 pocket battery needs to be connected to the GV4PB controller to set the advanced protection.

Short time delay protection (Isd)

Short time delay protection (around 100 ms) to let through motor starting currents, but to protect cables and motor starter devices and allow not to oversize them (particularly usefull for wide range settings circuit breakers).

Adjustable pick-up **Isd = 5...13 Ir** (13 by default).

Phase unbalance or phase loss (Iunbal, tunbal)

This function opens the circuit breaker if a phase unbalance occurs:

- that is greater than the 10…40 % of Irms (30 % by default): **Iunbal**
- following a time delay **(tunbal)** equal to:
  - 0.7 s during starting (non adjustable)
  - 1…10 s during normal operation (4 s by default).

Phase loss is an extreme case of phase unbalance and leads to tripping under the same conditions.

Ground-fault protection (Ig, tg)

Residual type ground-fault protection, with OFF position:

- adjustable pick-up **Ig**:
  - 0.7…1 In for products with nominal current from 2 to 50 A
  - 0.4…1 In for products with nominal current from 80 to 115 A
- adjustable time delay **tg** 0.1...0.4 s.

Jam (Ijam, tjam)

This function detects locking of the motor shaft caused by the load, with OFF position (OFF by default). During motor starting the function is disabled.

During normal operation, it causes tripping:

- above the **Ijam** pick-up that can be fine-adjusted from 1.5 to 8 Ir
- in conjunction with the **tjam** time delay that can be adjusted from 1 to 30 s.

Long start (Ilong, tlong)

This protection supplements thermal protection (class). It is used to optimize the protection according to the starting parameters, with OFF position (OFF by default). It detects abnormal motor starting i.e. when the starting current remains too high or too low with respect to a pick-up value and a time delay.

It causes tripping:

- in relation with a **Ilong** pick-up that can be fine-adjusted from 1.5 to 8 Ir
- in conjunction with the **tlong** time delay that can be adjusted from 1 to 200 s.

Indications

Front indications

- Green "Ready" LED: flashes slowly when the circuit breaker is ready to trip in the event of an abnormal deviation in engine operating conditions.
- Red alarm LED: goes ON when the thermal image of the motor is greater than 95 % of the permissible temperature rise

Remote indications via SDx module

See description on page B6/44.

Conforming to standards:

IEC/EN 60947-2, IEC/EN 60947-4-1

Product certifications:

UL 489, CSA C22.2 n°5.

Product references - UL applications

GV4PB - selection according to Short Circuit Current Rating (SCCR)

240 V AC SCCR kA	480Y/277 V AC SCCR kA	600Y/347 V AC SCCR kA	Reference
35	18	14	**GV4PB●●●B** (1)
65	35	18	**GV4PB●●●N**
100	65	25	**GV4PB●●●S**

*(1) Example: **GV4PB07S**, **GV4PB115S**.*

GV4PB thermal magnetic motor circuit breakers - selection according to FLA

3P 200 V FLA A	3P 230 V FLA A	3P 460 V FLA A	Rated %	Dial range A	Reference		
-	-	1.6	100	0.8 to 2		**GV4PB02N**	**GV4PB02S**
2.5	2.2	3	100	1.4 to 3.5		**GV4PB03N**	**GV4PB03S**
4.8	4.2	4.8	100	2.9 to 7		**GV4PB07N**	**GV4PB07S**
7.8	9.6	7.6	100	5 to 12.5		**GV4PB12N**	**GV4PB12S**
17.5	22	21	100	10 to 25	**GV4PB25B**	**GV4PB25N**	**GV4PB25S**
48	42	40	100	20 to 50	**GV4PB50B**	**GV4PB50N**	**GV4PB50S**
62	54	52	80	40 to 80	**GV4PB80B**	**GV4PB80N**	**GV4PB80S**
92	80	77	80	65 to 115	**GV4PB115B**	**GV4PB115N**	**GV4PB115S**

Connection by lugs

Please order GV4LUG accessory and LV426920 interphase barriers or LAD96590 terminal shield.

Characteristics:
pages B6/120 to B6/123

Curves:
pages B6/129 to B6/131

Dimensions, schemes:
pages B6/134, B6/135, B6/137

Product references



GV4AE11 auxiliary contact block

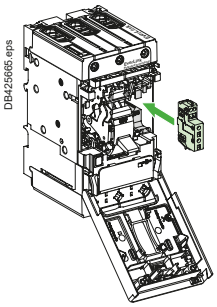

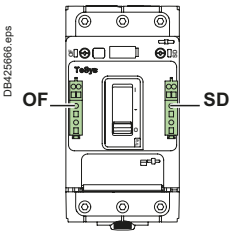

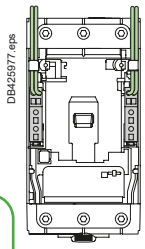

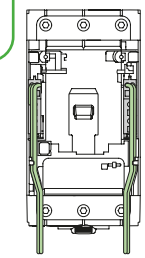

Pluggable auxiliary contact - OF or SD is dependent on cavity. Multiple internal wiring possibilities, even with long terminal shields

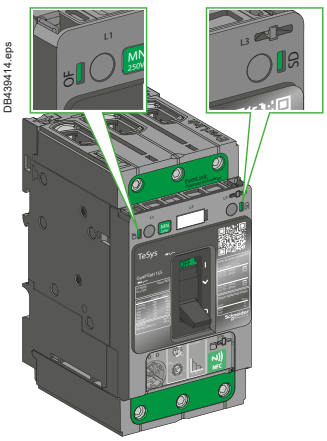

Visible presence of auxiliary contact block in OF or SD cavity

Auxiliary contact blocks

Auxiliary contacts give an indication of the circuit breaker status.
They can be used for remote visual signaling, alarming, electrical locking, relay activation, etc...
An auxiliary contact block provides one changeover contact with common point for OF or SD function, depending on the breaker cavity where it is inserted.

Auxiliary contact - Open/Close OF function

Indicates Open/Closed position of the circuit breaker contacts.

Auxiliary contact - Trip alarm SD function

- Indicates that the circuit breaker has tripped due to:
  - Electrical fault (overload, short circuit, ...)
  - shunt trip
  - undervoltage release
  - "push-to-trip" button.
- Resets when circuit breaker is reset.

Electrical characteristic

Characteristics						
Rated thermal current (A)		5				
Minimum load		2 mA at 17 V DC				
Utilization cat. (IEC 60947-5-1)		**AC12**	**AC15**	**DC12**	**DC13**	**DC14**
Operational current (A)	24 V AC/DC	5	5	5	2.5	1
	48 V AC/DC	5	5	2.5	1.2	0.2
	110...127 V AC / 110 V DC	5	4	0.6	0.35	0.05
	220/240 V AC	5	3	-	-	-
	250 V DC	-	-	0.3	0.05	0.03
	380/440 V AC	5	2.5	-	-	-
	660/690 V AC	5	0.11	-	-	-

Pilot duty B600 according UL508 and CSA 22.2 n°14.

Installation and connection

- Auxiliary contact blocks snap into left (for OF function) and right (for SD function) cavities behind the front accessory cover of the circuit breaker and their presence is visible on the front face through green flags.
- One model serves for all indication functions depending on where it is fitted in the circuit breaker.
- Each NO and NC spring terminal may be connected by one 0.5...1.5 mm² flexible copper wire and by two for the common point.
- Wires can be exited out of any of the four corners of the breaker under the accessory cover.

Description	Maximum number	Mounting	Type of contacts	Sold in lots of	Reference
Auxiliary contact block for OF or SD indication	2 (1 OF + 1 SD)	Internal plug-in	NO + NC	1	**GV4AE11**

Characteristics: page B6/133
Schemes: page B6/137



GV4AS137 shunt trip

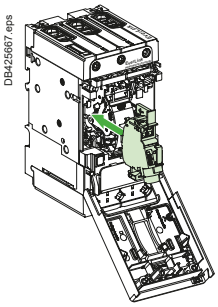

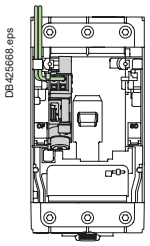

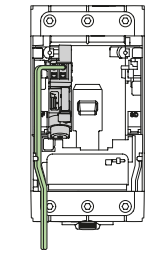

MN or MX plugged into cavity. Multiple internal wiring possibilities, even with long terminal shields

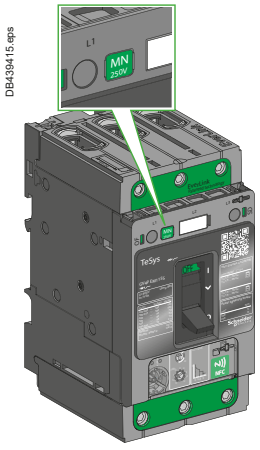

Visible presence of MN undervoltage release in circuit breaker cavity, visible rated voltage through the window.

MX shunt trip, MN undervoltage release

MX and MN trip the circuit breaker on a control signal. They are mainly used for remote and emergency-off commands.

It is advised to test the system every six months.

MX shunt trip

- Trips the circuit breaker when the control voltage rises above 70 % of its rated voltage (Un).
- Impulse type ⩾ 20 ms or maintained control signals.
- Shunt trip 110...130 V AC is suitable for ground-fault protection when combined with a Class I ground-fault sensing element.
- Continuous duty rated coil (1).

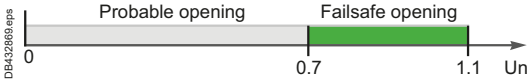

Opening conditions of the MX release.

MN undervoltage release

- Trips the circuit breaker when the control voltage drops below 35 % of its rated voltage.
- Between 35 % and 70 % of the rated voltage opening is only probable.
- Above 70 % of the rated voltage, opening does not take place.
- Continuous duty rated coil.
- Circuit breaker closing is possible only if the voltage exceeds 85 % of the rated voltage. If an undervoltage condition exists, operation of the closing mechanism of the circuit breaker will not permit the main contacts to touch, even momentarily. This is commonly called "Kiss Free".

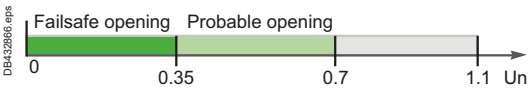

Opening conditions of the MN release.



Closing conditions of the MN release.

Installation, connection

Accessories snap into cavities under the circuit breaker front accessory cover. Spring-type terminals in order to insure a fast and reliable connection to 0.5...1.5 mm² flexible copper wire (one per terminal).

Operation

Circuit breaker must be locally reset after trip by shunt trip (MX) or undervoltage release (MN).Tripping by MX or MN has priority over manual closing; in the presence of a standing trip order such an action does not result in main contacts closing, even temporarily.

Description	Maximum number	Mounting	Voltage	Reference
MX Shunt trip	1	Internal, plug-in	24 V∿ 50/60 Hz, 24 V⎓	**GV4AS027**
			48 V∿ 50/60 Hz, 48 V⎓	**GV4AS057**
			110-130 V∿ 50/60 Hz 125 V⎓	**GV4AS137**
			220-240 V∿ 50 Hz, 208-240 V∿ 60 Hz, 277 V 60 Hz	**GV4AS287**
			380-415 V∿ 50 Hz, 440-480 V∿ 60 Hz	**GV4AS487**
MN undervoltage release	1	Internal, plug-in	24 V∿ 50/60 Hz, 24 V⎓	**GV4AU027**
			48 V∿ 50/60 Hz, 48 V⎓	**GV4AU057**
			110-130 V∿ 50/60 Hz 125 V⎓	**GV4AU137**
			220-240 V∿ 50 Hz, 208-240 V∿ 60 Hz	**GV4AU247**
			277 V∿ 60 hZ	**GV4AU286**
			380-415 V∿ 50 Hz	**GV4AU415**
			440-480 V∿ 60 Hz	**GV4AU486**

(1) Except for MX 24 V AC/DC (in case of continuous activation, may generate some minor perturbation in sensitive environment).

Characteristics:
page B6/132

Schemes:
page B6/137

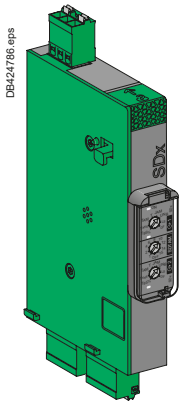

GV4ADM1111 SDx contact module

SDx contact module for GV4PEM, GV4PB (Multifunction)

The SDx provides alarming and functional fault differentiation for GV4PEM, GV4PB (Multifunction) circuit breaker. This module has 2 NO/NC outputs dry contacts which can be assigned with one of the 8 following SD status:

- SD**T95%** overload alarm: thermal image of the motor is greater than 95 % of the permissible temperature rise.
- SD**Txxs** overload alarm: circuit breaker will trip in xx seconds with the same load. xx is adjustable between 10 to 40 seconds (default 20 seconds) on the circuit breaker itself through NFC or a computer with EcoStruxure Power Commission software and an interface module (TRV00911).
- SD**TAM** overload alarm just before tripping: in the event of a phase unbalance, overload, or on a jam fault, this output is activated to open the contactor and avoid circuit breaker tripping. In that case, contact can be manually or automatically reseted after an adjustable cooling time from 1 to 15 minutes. If after a 400 ms delay the motor is not stopped, the circuit breaker will trip.
- SD**T** overload trip indication: circuit breaker has tripped due to an overload fault
- SD**JAM** jam trip indication: circuit breaker has tripped due to a jam fault
- SD**UNB** phase unbalance trip indication: circuit breaker has tripped due to an unbalance fault
- SD**LS** long start trip indication: circuit breaker has tripped due to a long start fault
- SD**GF** ground-fault trip indication: circuit breaker has tripped due to a ground-fault.

Outputs are automatically resetted either when alarm disappears or when the circuit breaker is restarted.

Output characteristics

- 2 NO/NC dry contacts
- 24...250 V AC/DC
- Minimum load: 2 mA under 24 V DC
- Max load: 5 A
- AC15 (230 V max - 400 VA)
- DC13 (24 V - 50 W)

Power characteristics

- 24...240 V AC/DC

Contact rating (per UL/CSA B300 & R300)

Standard	Rated Voltage Ue	Operational Current Ie	Make	Break	Ithe
		A	VA	VA	A
B300	120 V AC	3	3600	360	5
	240 V AC	1.5			
R300	125 V DC	0.22	28	28	1
	250 V DC	0.1			

The rated operational current Ie (A), the rated operational voltage Ue (V) and the break apparent power B (V.A) are correlated by the formula B = Ue · Ie; with Ie ≤ Ith.

Installation, connection, settings and indication

The SDx module is clipped on the right side of the circuit breaker. Each removable spring terminal can be connected by one 0.5... 1.5 mm² copper wire. Settings and indications are available on the front face.

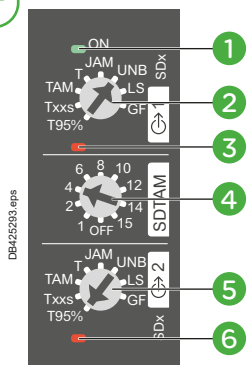

1. Green led lighted when the module is powered.
2. Output 1: SD status assignment.
3. Red led lighted when output 1 is activated.
4. Cooling time setting before automatic restart (OFF – 1…15 min).
5. Output 2: SD status assignment.
6. Red led lighted when output 2 is activated.

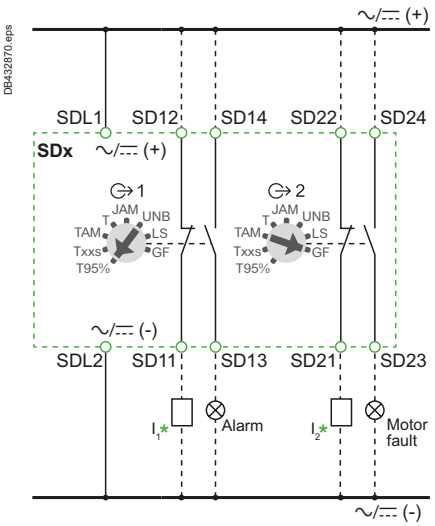

* I1, I2: PLC digital inputs - used as alarm inputs, as an example.

SDx wiring diagram

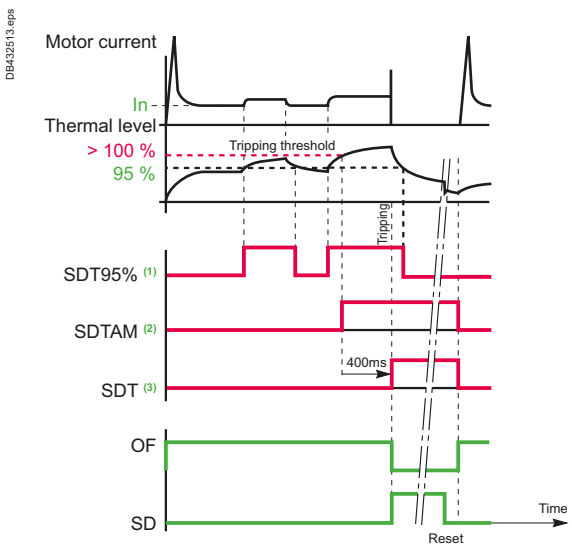

GV4PEM curves
SDx modules curves
Aux. contacts curves

(1) SDT95% (= 95% overload)
(2) SDTAM (overload tripping pre alarm) here not connected to any contactor coil
(3) SDT (= tripping on thermal fault)

Description	Mounting	Maximum number	Type of contacts	Unit reference
SDx: alarming / fault differentiation module	Side	2	N/O / N/C	**GV4ADM1111**

Dimensions:
pages B6/136 and B6/137

Schemes:
page B6/137

Product references

DB424920.eps

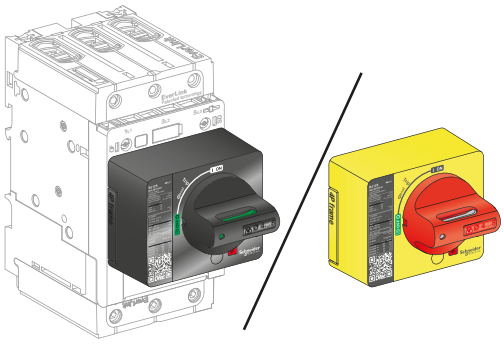

Direct mounting rotary handle

PB121325.eps



GV4ADN02 direct mounting rotary handle

DB424921.eps

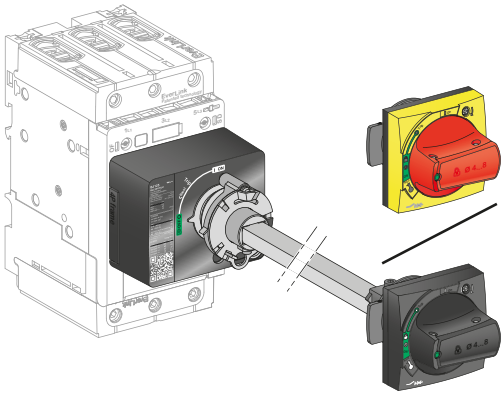

Front extended rotary handle (door-mounting)

PB121326.eps



GV4APN01 front extended rotary handle kit

PB106297.eps



GVAPL01 laser tool

Direct mounting rotary handles

Installation
The direct mounting rotary handle has to be mounted by 3 screws on the front accessory cover.

Operation
The direct mounting rotary handle maintains:
- suitability for isolation
- indication of the three positions OFF (**O**), ON (**I**) and tripped (**Trip**)
- access to the "push-to-trip" button
- visibility and access to the trip unit.

Device padlocking
The circuit breaker may be locked in the OFF position by using one to three padlocks (not supplied) or in ON position after customer modification of the rotary handle before installation, padlock shackle Ø4-8 mm. Locking in the ON position does not prevent the circuit breaker from tripping if a circuit or motor malfunction occurs. In this case, the handle remains in the ON position after the circuit breaker trips. Unlocking is required for the handle to go to the tripped then the OFF position.

Variations: door locking
Door locking built-in functionality can be activated by the customer to prevent opening the door when the circuit breaker is ON or in trip position. For exceptional situations, door locking can be temporarily disabled with a tool by qualified personel to open the door when the circuit breaker is closed.

Description	Type	Degree of protection	Reference
Direct mounting rotary handle	Black handle	IP40	**GV4ADN01**
	Red handle on yellow bezel (VDE standard, for machine control)	IP40	**GV4ADN02**

Front extended rotary handles

Installation
The door-mounted (extended) rotary handle is made up of:
- a unit that has to be screwed on the front accessory cover of the circuit breaker
- an assembly (handle mechanism and front plate) on the door that is always secured in the same position, whether the circuit breaker is installed vertically or horizontally
- an adjustable extension shaft.

The handle mechanism is fixed with a nut (Ø22 mm) to make assembly easier. The Laser Square tool (GVAPL01) can be used to accurately align the hole on the door with the circuit breaker.

Operation when door is closed
The door mounted handle makes it possible to operate a circuit breaker installed in an enclosure from the front. The door mounted operating handle maintains:
- suitability for isolation
- indication of the three positions OFF (**O**), ON (**I**) and tripped (**Trip**)
- visibility and access to trip unit when the door is open
- degree of protection of the handle on the door: IP54 or IP65 as per IEC 60529.

Mechanical door locking when device closed
A standard feature of the extended rotary handle is a locking function, built into the shaft, that disables door opening when the circuit breaker is in the ON or tripped positions.
Door locking can be temporarily disabled with a tool by qualified personnel to open the door without opening the circuit breaker. This operation is not possible if the handle is locked by a padlock.

Device and door padlocking
Padlocking locks the circuit breaker handle and disables door opening:
- standard situation, in the OFF position, using 1 to 3 padlocks, shackle Ø4-8 mm, padlocks are not supplied
- for the black handle, with a voluntary modification of the door handle (to be done by the customer during installation), in the ON and OFF positions. Locking in the ON position does not prevent the circuit breaker from tripping if a circuit or motor malfunction occurs. In this case, the handle remains in the ON position after the circuit breaker trips. Unlocking is required for the handle to go to the tripped then the OFF position.

Shaft length
The shaft length is the distance between the back of the circuit breaker and the door:
- minimum shaft length is 214 mm
- maximum shaft length is 627 mm
- shaft length must be adjusted.

Dimensions:
pages B6/134 to B6/136

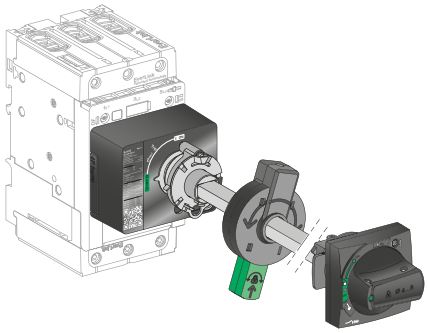

Open door shaft operator mounted on front extended rotary handle assembly



GV4APN01
Front extended rotary handle kit



LV426937
Open door shaft operator

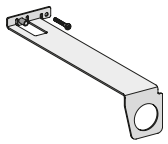

LV426938
Support arm for extended rotary handle

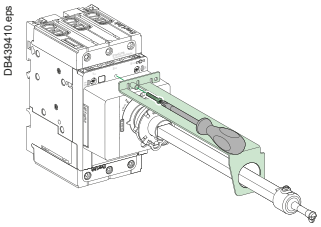



GVAPL01 - Laser tool

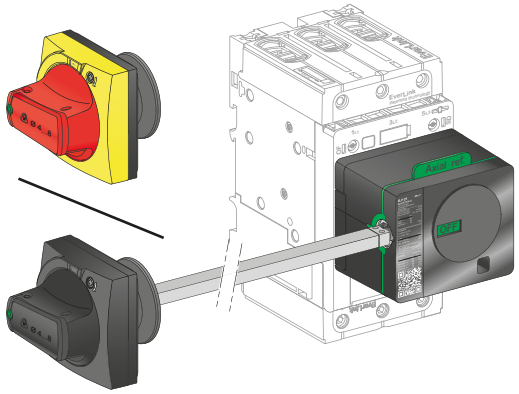

Side extended rotary handle (cover mounting)



LV426936 - Side rotary handle kit



LV426998, LV426997 - Universal handles

Front extended rotary handles (cont.)

Operation when door is opened
An open door shaft operator can be used to operate the circuit breaker when door is opened. This accessory complies with UL508 A.
The indication of the three positions OFF (**O**), ON (**I**) and tripped (**Trip**) is visible on the circuit breaker.
The circuit breaker itself may be locked in OFF position when the door is opened by 1 padlock / lockout hasp, shackle Ø4-8 mm.

Description	Type	Degree of protection	Reference
Front extended rotary handle kit	Black handle	IP54	**GV4APN01**
	Red handle on yellow bezel	IP54	**GV4APN02**
		IP65	**GV4APN04**
Open door shaft operator			**LV426937**
Support arm for extended rotary handle			**LV426938**
Laser tool			**GVAPL01**
Spare part: GV4 universal handle (for replacement of front. ext. or side rotary handle)	Black handle	IP54	**LV426997**
	Red handle on yellow bezel	IP54	**LV426998**
		IP65	**LV426999**

Side rotary handles (left or right)

Installation
The side-mounted rotary handle is made up of:
- a unit that has to be screwed on the front accessory cover of the circuit breaker
- an assembly (handle and front plate) on the side (left or right) of the enclosure
- an adjustable extension shaft

The handle mechanism is fixed with a nut (Ø22 mm) to make assembly easier.

Operation
The side mounted rotary handle makes it possible to operate circuit breakers installed in enclosure from the side. The side mounted rotary handle maintains:
- suitability for isolation
- indication of the three positions OFF (**O**), ON (**I**) and tripped (**Trip**). Moreover, the position is visible on the circuit breaker itself
- visibility and access to trip unit when the door is open
- degree of protection of the handle on the side: IP54 or IP65 as per IEC 529.

Device padlocking
The circuit breaker may be locked in the OFF position, or, for the black rotary handle only, in ON position after voluntary modification of the side handle (to be done by the customer during installation), by using one to three padlocks, padlock shackle Ø4-8 mm ; padlocks are not supplied.
Locking in the ON position does not prevent free circuit breaker from tripping if a circuit or motor malfunction occurs. In this case, the handle remains in the ON position after the circuit breaker tripping. Unlocking is required to go to the tripped then the OFF position.

Shaft length
The shaft length is the distance between the side of the circuit breaker and the side of the enclosure:
- minimum shaft length is 45 mm
- maximum shaft length is 480 mm
- shaft length must be adjusted.

Description	Type	Degree of protection	Reference
Side rotary handle kit	Black handle	IP54	**LV426935**
	Red handle on yellow bezel (VDE standard, for machine control)	IP54 (1)	**LV426936**
Spare part: GV4 universal handle (for replacement of front. ext. or side rotary handle)	Black handle	IP54	**LV426997**
	Red handle on yellow bezel	IP54	**LV426998**
		IP65	**LV426999**

*(1) IP65 possible with **LV426935** kit (Black handle not used) + **LV426999** Red handle on yellow bezel universal handle.*

Dimensions:
page B6/136

Handle padlocking devices

Padlocking systems can receive up to three padlocks with diameters of 5-8 mm (4-8 mm for rotary handles); padlocks not supplied. Locking in the OFF position guarantees isolation as per IEC 60947-2.

Direct rotary handle padlocking
By padlock – No accessory required.
- Lock in OFF position.
- Lock in ON position with simple mechanism modification.

Front Extended /Side rotary handle padlocking
By padlock – No accessory required.
- Lock in OFF position.
- Lock in ON position with simple mechanism modification (black handle only).

Door opening prevented.

Toggle handle padlocking
By padlock – removable toggle locking device required **29370**.
- Lock in OFF position.

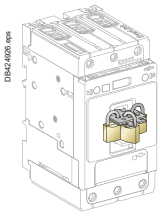

3 padlocks mounted on 29370 toggle locking device



29370 removable toggle locking device

Description	Reference
Removable toggle locking device for 1 to 3 padlocks	**29370**

Sealing devices

Control type	■ Front removal. ■ Access to auxiliaries.	■ Access to settings and test connector.
Toggle	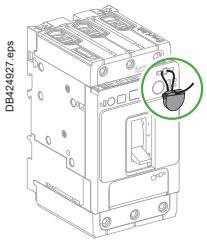	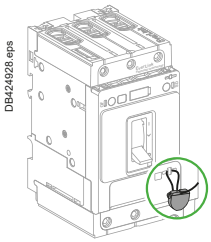
Rotary handle	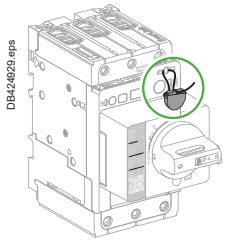	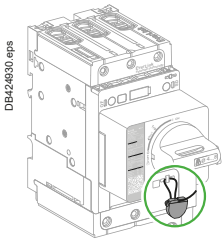

Description	Reference
Bag of 6 leads + 6 sealing accessories	**LV429375**



LV429375 leads + sealing accessories

Product references


PB121333.eps

LAD96595
EverLink connector


PB121334.eps

GV4LUG
crimped lug connector


PB121343.eps

LV426920
interphase barriers


PB121342.eps

LV426990
9 N.m green throwaway bits


PB121335.eps

LAD96590
transparent terminal shield


PB121344.eps

LV426940
spreader 3-pole


PB121341.eps

LV426992
5 N.m yellow throwaway bits

EverLink power connection

Description	Reference
EverLink connector	**LAD96595**

Crimp lug/busbar connection

Description		Sold in lots of	Reference
Crimped lug connector + screws		1	**GV4LUG**
Transparent terminal shield for crimped lug connector		1	**LAD96590**
Interphase barriers		6	**LV426920**
Spreader 3-pole	To increase the pitch to 35 mm	1	**LV426940**

Limited torque throwaway bits

Description	Sold in lots of	Reference
Green - 9 N.m	6	**LV426990**
Yellow - 5 N.m	6	**LV426992**

Note: *torque limiting breakaway bits may be used, particularly in the field, to tighten at the right torque EverLink™ or compression lug power connections.*


PB121336.eps

LV434206
pocket battery


PB121337.eps

TRV00910
maintenance case


PB121338.eps

TRV00911
Spare USB maintenance interface


PB121340.eps

TRV00915
spare power supply 110-240 V AC


PB121339.eps

TRV00917
spare GV4PEM cord for USB maintenance interface

Test tool, software, demo for GV4PEM

Test tool

Pocket battery Allows the ref. GV4PEM or GV4PB controller to be powered for adjustments and tests when no internal source is available.	**LV434206**
Maintenance case Comprising: ■ USB maintenance interface ■ Power supply ■ GV4PEM cord ■ USB cord ■ RJ45/RJ45 male cord	**TRV00910**
Spare USB maintenance interface	**TRV00911**
USB interface spare power supply, 110-240 V AC, with 4 different socket adapters	**TRV00915**
Spare cord for connecting GV4PEM to USB maintenance interface	**TRV00917**

Software

Configuration and setting software EcoStruxure Power Commission	**Free download**

TeSys Giga - Frame 5, 6

55 to 250 kW



Product references

PB120638.eps



GV5P220F

Thermal-magnetic circuit breakers Frame 5 with screw clamp terminals up to 110 kW (1)

Control by direct rotary handle

Standard power ratings of 3-phase motors 50/60 Hz in category AC-3									Thermal setting range (Ir)	Reference	Weight
400/415 V			500 V			660/690 V					
P	Icu	Ics (2)	P	Icu	Ics (2)	P	Icu	Ics (2)			
kW	kA	%	kW	kA	%	kW	kA	%	A		kg
55...75	36	100	**75...90**	30	100	**90... 110**	8	100	70…150	**GV5P150F**	2.4
	70	100		50	100		10	100		**GV5P150H**	
90...110	36	100	**110**	30	100	**110...132**	8	100	100…220	**GV5P220F**	2.6
	70	100		50	100		10	100		**GV5P220H**	

(1) Breakers have to be used with suitable rating of contactors, as defined in section A6.
(2) As % of Icu.

PB120633.eps



GV6P320F

Thermal-magnetic circuit breakers Frame 6 with screw clamp terminals up to 250 kW (1)

Control by direct rotary handle

Standard power ratings of 3-phase motors 50/60 Hz in category AC-3									Thermal setting range (Ir)	Reference	Weight
400/415 V			500 V			660/690 V					
P	Icu	Ics (2)	P	Icu	Ics (2)	P	Icu	Ics (2)			
kW	kA	%	kW	kA	%	kW	kA	%	A		kg
132...160	36	100	**160...200**	25	100	**200...250**	10	100	160…320	**GV6P320F**	6.5
	70	100		50	100		10	100		**GV6P320H**	
200...250	36	100	**250...315**	25	100	**315...400**	10	100	250…500	**GV6P500F**	6.7
	70	100		50	100		10	100		**GV6P500H**	

(1) Breakers have to be used with suitable rating of contactors, as defined in section A6.
(2) As % of Icu.

Thermal-magnetic circuit breakers Frame 5/6 with screw clamp terminals (1)

Control by direct rotary handle

Thermal setting	3-Phase			Standard breaking capacity	High breaking capacity
	230 V	460 V	575 V		
A	HP	HP	HP	Reference	Reference
90…150	50	100	150	**GV5P150F**	**GV5P150H**
133…220	75	150	200	**GV5P220F**	**GV5P220H**
160…320	125	250	300	**GV6P320F**	**GV6P320H**
250…500	150	350	500	**GV6P500F**	**GV6P500H**

(1) Breakers have to be used with suitable rating of contactors, as defined in section A6.

Characteristics: page B6/140
Curves: pages B6/141 to B6/143
Dimensions: pages B6/146 to B6/152

DB432813.ai

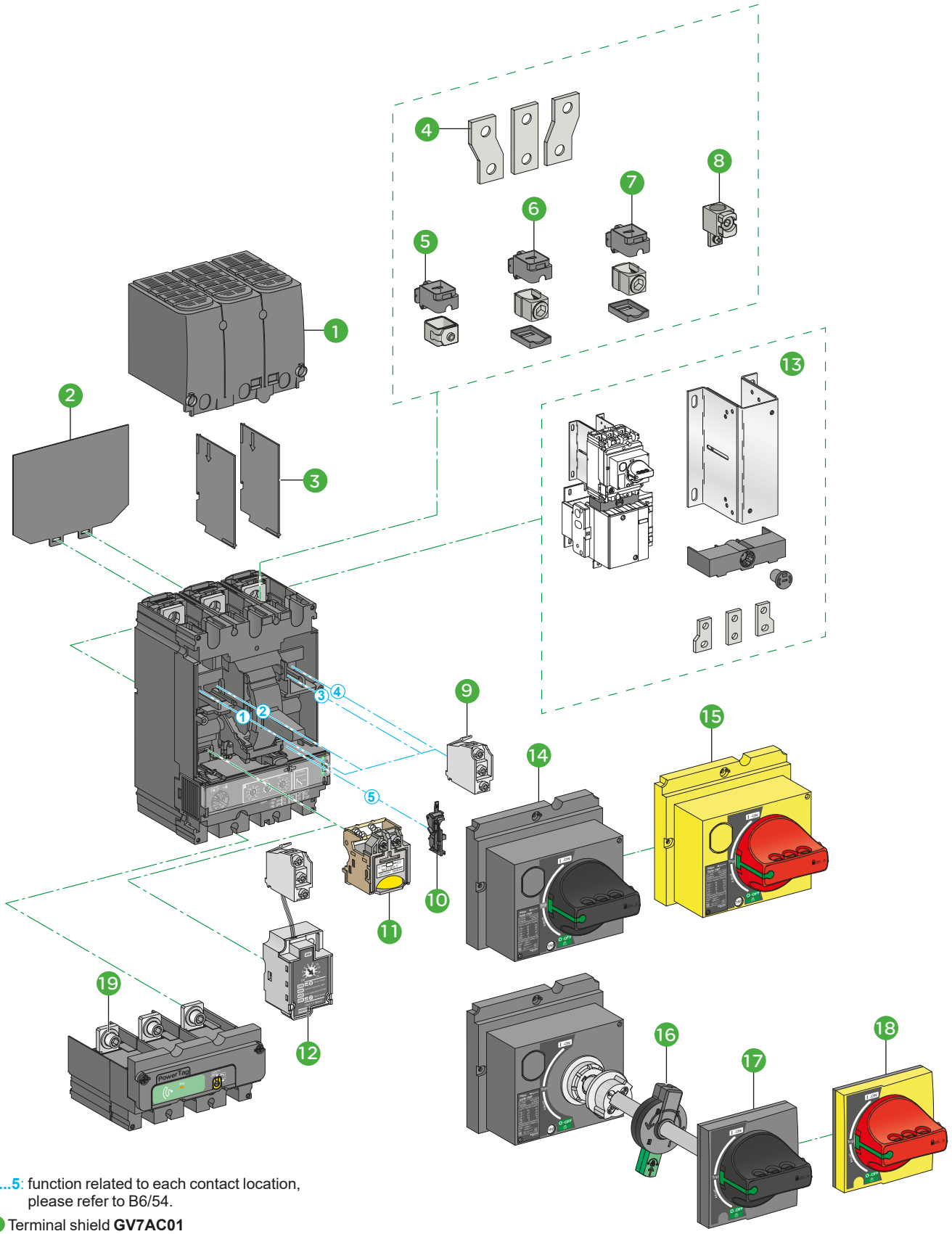

1...5: function related to each contact location, please refer to B6/54.

1. Terminal shield **GV7AC01**
2. Insulating screen **GV7AC05**
3. Interphase barriers **GV7AC04**
4. Spreaders 45 mm **GV7AC03**
5. Steel connector **GV7AC021** (1.5-95 mm²)
6. Aluminum connector **LV429227** (25-95 mm²)
7. Aluminum connector **GV7AC022** (120-185 mm²)
8. Aluminum connector **LV429244** (120-240 mm²)
9. OF, SD, or SDE indication contacts **29450** (standard) / **29452** (for low level)
10. SDE adapter **LV429451**
11. UVR or SHT voltage release **LV42940●/LV42938●**
12. SDTAM thermal fault module **LV429424**
13. Combination kit for contactor **GV7AC06/GV7AC08**
14. Direct rotary handle black **GV5AP03** (shipped with the device)
15. Direct rotary handle red on yellow bezel **GV7AP04**
16. Open door shaft operator **LV426937**
17. Extended rotary handle black **GV7AP01**
18. Extended rotary handle red on yellow bezel **GV7AP02**
19. PowerTag M250 wireless energy sensor **LV434020**

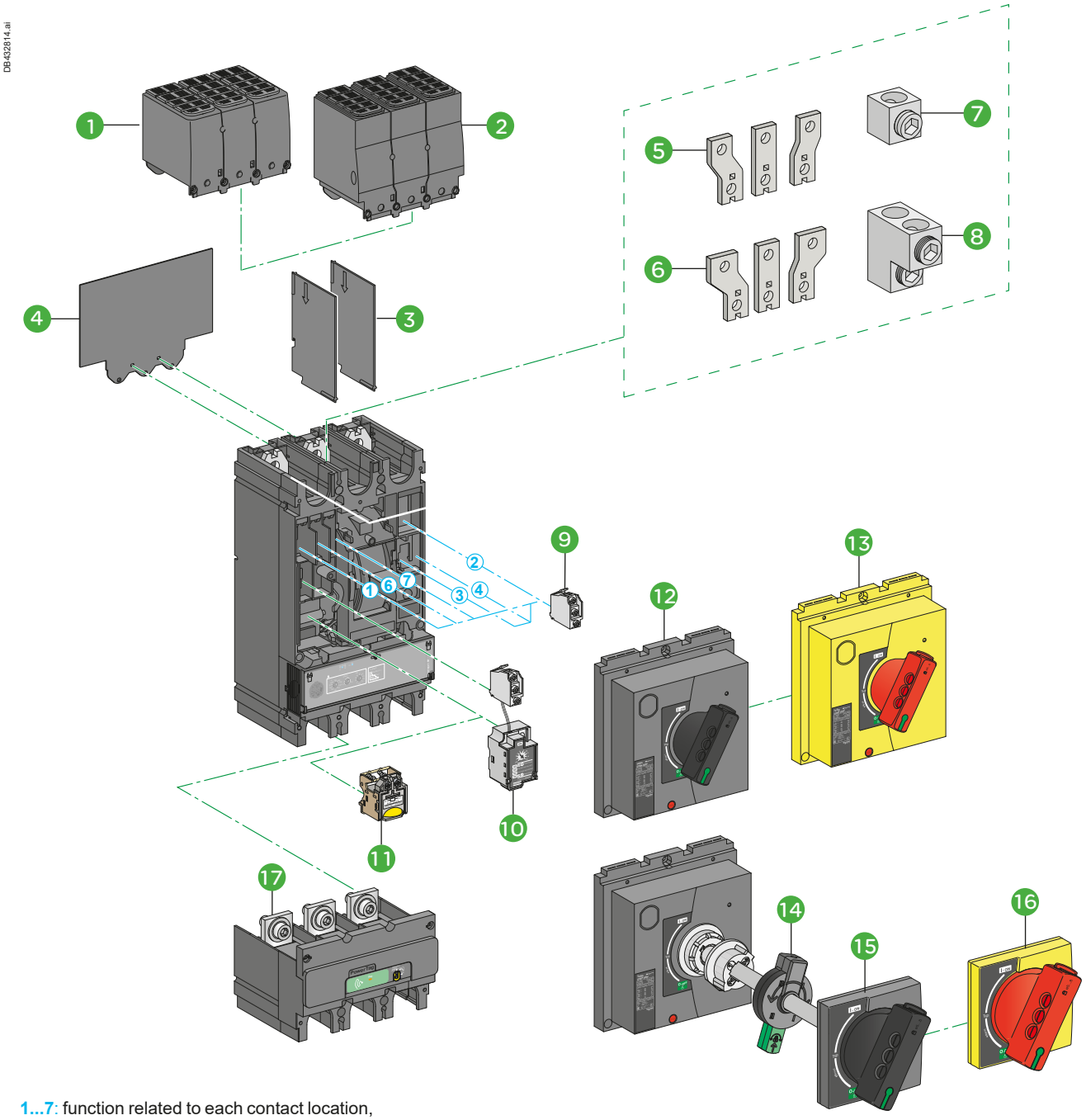

1...7: function related to each contact location, please refer to B6/54.

1. Terminal shield 45 mm **LV432593**
2. Terminal shield 52.5 mm **LV432595**
3. Interphase barriers **LV432570**
4. Insulating screen **LV432578**
5. Spreader 52.5 mm **LV432490**
6. Spreader 70 mm **LV432492**
7. Aluminum connector **LV432479** (1 x 35-300 mm²)
8. Aluminum connector **LV432481** (2 x 35-300 mm²)
9. OF, SD, or SDE indication contacts **29450** (standard) / **29452** (for low level)
10. SDTAM thermal fault module **LV429424**
11. UVR or SHT voltage releases **LV42940●/ LV42938●**
12. Direct rotary handle black **GV6AP03** (shipped with the device)
13. Direct rotary handle red on yellow bezel **LV432599**
14. Open door shaft operator **LV426937**
15. Extended rotary handle black **LV432598**
16. Extended rotary handle red on yellow bezel **LV432600**
17. PowerTag M630 wireless energy sensor **LV434022**

Add-on auxiliary contacts - OF contacts

These allow remote indication of the circuit breaker contact states. They can be used for signalling, electrical locking, relaying, etc. They are available in two versions: standard and low level. They include a terminal block and the auxiliary circuits leave the circuit breaker through a hole provided for this purpose.
They perform the following functions, depending on where they are located in the circuit breaker:

Location	Function	Application
1 and/or 4 (GV5) 1 and/or 4, 6, 7 (GV6)	C/O contact	Indicates the position of the circuit breaker poles.
2	Trip indication	Indicates that the circuit breaker has tripped due to an overload, a short-circuit, a differential fault or the operation of a voltage trip (undervoltage or shunt trip), or of the "push to trip" test button. It resets when the circuit breaker is reset.
3	Electrical fault indication	Indicates that the circuit breaker has tripped due to an overload, a short-circuit or a differential fault. It resets when the circuit breaker is reset.
5	Adapter for electrical fault indication	This accessory is mandatory for GV5 to provide electrical fault indication.

Type	Reference
Standard	**29450**
Low level	**29452**
Adapter for electrical fault indication	**LV429451**

Thermal fault module - SDTAM

GV5/ GV6 can be equipped with thermal fault module. This module have:
■ a contact to indicate overload fault in the circuit-breaker
■ a contact to open the contactor. In the event of overload or phase unbalance, this output is activated 400 ms before circuit-breaker tripping to open the contactor and avoid circuit breaker tripping.

Voltage	Reference
24...415 V AC/DC	**LV429424** (1)

Electric trips

These allow the circuit breaker to be tripped via an electrical control signal.
■ Undervoltage release (UVR) - LV42940●
■ Trips the circuit breaker when the control voltage drops below 35 % of its rated voltage.
■ Between 35 % and 70 % of the rated voltage opening is possible but not guaranteed.
■ Above 70 % of the rated voltage, opening does not take place.
■ Continuous duty rated coil.
■ Circuit breaker closing is possible only if the voltage exceeds 85 % of the rated voltage.
■ Shunt trip (SHT) - LV42938●
Trips the circuit breaker when the control voltage rises above 0.7 times the rated voltage.
■ Impulse type ⩾ 20 ms or maintained control signals.
■ Operation (LV42940● or LV42938●)
□ When the circuit breaker has been tripped by an UVR or by a SHT, it must be reset either locally.
□ Tripping has priority over manual closing: if a tripping order is present, manual action does not result in closing, even temporarily, of the contacts.
□ Durability: 50 % of the mechanical durability of the circuit breaker.

Type	Voltage	Reference
Undervoltage trip	220…240 V, 50/60 Hz	**LV429407**
Shunt trip	110…130 V, 50/60 Hz	**LV429386**
	220…240 V, 50/60 Hz	**LV429387**

*(1) **LV429429** takes the place of the UVR/SHT electric trip coil and an auxiliary contact (C/O contact 1).*

Motor circuit breakers

Characteristics:
pages B6/144 and B6/145
Schemes:
page B6/152


PB120641.eps

LV432479


PB120642.eps

LV432490


PB120643.eps

LV432593


PB120644.eps

GV7AC04


PB120640.eps

GV6AP03


PB120645.eps

LV432599


PB120646.eps

GV7AP02

Cabling accessories

Cable connectors: The connectors for Frame 5 snap directly on to the device terminals or are secured by clips to right-angle and straight terminal extensions as well as spreaders. Frame 6 connectors are screwed directly to the device terminals.

Spreaders: Spreaders may be used to increase the pitch from 35 mm to 45 mm for Frame 5. The 45 mm pitch can be increased to 52.5 or 70 mm for Frame 6.

Long terminal shields: They are used for front connection with cables or insulated bars. They comprise two parts assembled with captive screws, forming an IP40 cover. The top part is equipped with sliding grids with break marks for precise adaptation to cables or insulated bars. The rear part completely blocks off the connection zone. Partially cut squares can be removed to adapt to all types of connection for cables with lugs or copper bars. Long terminal shields may be mounted upstream and downstream of the breaker.

Phase barriers: These interphase barriers are used for maximum insulation at the power-connection points.

Insulating screens: These are fited at the rear of the device which provides insuation. Their use is mandatory for devices with spreaders, installed on backplates, when terminal shields are not used.

Frame 5 Combination kits: These kits allow link between the circuit breaker and the contactor. The cover provides protection against direct finger contact. The kit comprises links, a protective shield and a depth adjustable metal bracket for the breaker.

Description	Application	Sold in lots of	Unit reference GV5	Unit reference GV6
Steel connectors (set of 3)	1.5…95 mm² ≤ 150 A	1	**GV7AC021**	**–**
Aluminium connectors (set of 3)	25…95 mm² ≤ 220 A	1	**LV429227**	
	120…185 mm² ≤ 220 A	1	**GV7AC022**	
	120…240 mm² ≤ 220 A	1	**LV429244**	
	35...300 mm²	1		**LV432479**
	2 x 35...300 mm²	1		**LV432481**
Spreader 3-pole (1)	35…45 mm pole pitch	1	**GV7AC03**	
	52.5 mm pole pitch	1		**LV432490**
	70 mm pole pitch	1		**LV432492**
Long terminal shield (IP40) (1)	35 mm pole pitch	1	**GV7AC01**	
	45 mm pole pitch	1		**LV432593**
	52.5 mm pole pitch	1		**LV432595**
Phase barriers (set of 6)		1	**GV7AC04**	**LV432570**
Insulating screens (set of 2)	45 mm	1	**GV7AC05**	
	70 mm			**LV432578**
Combination Kits (2)				
For contactor LC1F115…F185	Connection kits between breaker and contactor	1	**GV7AC06**	
For contactor LC1D115 and D150		1	**GV7AC08**	

Direct rotary handle

The circuit breaker is always supplied direct rotary handle (black handle, black plate) as standard and it provides IP40 protection. The other type handles can be used by replacing this direct rotary handle. It includes a device for locking the circuit breaker in the O (Off) position by means of up to 3 padlocks with a shackle diameter of 5 to 8 mm (padlocks not included). A MCC conversion accessory allows the direct rotary handle to be mounted on the enclosure door. In this case, the door cannot be opened if the circuit breaker is in the “ON” position. Circuit breaker closing is inhibited if the enclosure door is open and prevents the device from being closed if the door is open.

Description	Type	Sold in lots of	Unit reference GV5	Unit reference GV6
Direct rotary handle	Black handle, black legend plate	1	**GV5AP03**	**GV6AP03**
	Red handle, yellow legend plate	1	**GV7AP04**	**LV432599**
MCC conversion accessory	Four mounting direct rotary handle on enclosure door	1	**GV7AP05**	**LV432606**

Extended rotary handle

Allows to operate a circuit breaker from the front of the switch board, which's installed in the back of an enclosure, which provides IP55 protection. It comprises:

- a unit which is screwed onto the front accessory cover of the circuit breaker,
- an assembly (handle mechanism and front plate) to be fitted on the enclosure door,
- an extension shaft which must be adjusted.
- The distance minimum and maximum distances between the mounting surface and the door are
  - 185...600 mm for Frame 5
  - 209...600 mm for Frame 6

It includes a device for locking the circuit breaker in the O (Off) position by means of up to 3 padlocks with a shackle diameter of 5 to 8 mm (padlocks not included) and disables opening enclosure door.

Description	Type	Sold in lots of	Unit reference GV5	Unit reference GV6
Extended rotary handle	Black handle, black legend plate	1	**GV7AP01**	**LV432598**
	Red handle, yellow legend plate	1	**GV7AP02**	**LV432600**

(1) Terminal shields cannot be used together with spreaders.

(2) The kit comprises links, a protective shield and a depth adjustable metal bracket for the breaker.

Dimensions:
page B6/149

Front extended rotary handles (cont.)

Operation when door is opened
An open door shaft operator can be used to operate the circuit breaker when door is opened. This accessory complies with UL508 A.
The indication of the three positions OFF (**O**), ON (**I**) and tripped (**Trip**) is visible on the circuit breaker.
The circuit breaker itself may be locked in OFF position when the door is opened by 1 padlock / lockout hasp, shackle Ø4-8 mm.

PB121328.eps



LV426937
Open door shaft operator

Description	Reference
Open door shaft operator	**LV426937**
Laser tool	**GVAPL01**

PB106297.eps



GVAPL01 Laser tool

Other accessories

Bag of 6 tamper seals + 6 cover caps (1 large, 5 small) for screw heads	**LV429375**

PB120637.eps



LVA429375
Sealing accessories

PowerTag Measurement module

Wireless-communication module
PowerTag is directly mounted on the bottom side of the circuit breaker.
It provides capability to measure energy, monitor voltage loss, and trigger alarms.
It then delivers useful data to a concentrator for monitoring and diagnosis of the associated circuit breaker.
In addition to monitoring and alarming, PowerTag solution provides a complete knowledge of real time electrical values with a rich and accurate data transfer every 5 seconds.
PowerTag energy sensors can be quickly and easily installed in new or existing panels at any time. Compared to traditional metering solutions, installation time and commissioning are much shorter with no wiring, hence an error proof high density solution and a built-in class 1 accuracy.

PB121345.eps



LV434020, LV434022

Functions
PowerTag energy sensor measures the following values in accordance with the IEC 61557-12 standard:
- ■ Energy (4 quadrants):
  - □ Active energy (Wh): total and partial, delivered and received
  - □ Active energy per phase (Wh): total
  - □ Reactive energy (VARh): partial, delivered and received
- ■ Power:
  - □ Active power (W): total and per phase
  - □ Reactive power (VAR): total
  - □ Apparent power (VA): total
- ■ Voltages (V): phase-to-phase (U12, U23, U31) and phase-to-neutral (V1N, V2N, V3N)
- ■ Currents (A): per phase (I1, I2, I3)
- ■ Frequency
- ■ Power factor
- ■ Voltage loss alarm:
  - □ PowerTag energy sensor sends a "voltage loss" alarm and the current-per-phase value before being de-energized
  - □ At "voltage loss", PowerTag adds an overload alarm if the current is higher than the rated current of the associated protective device.

Note: *functions listed above depend on concentrators/gateways.*

Description	Reference
PowerTag M250 3P: suitable for Frame 5 up to 220 A	**LV434020**
PowerTag M630 3P: suitable for Frame 6 up to 500 A	**LV434022**

Dimensions:
page B6/150

PowerLogic™ Energy measurement solutions






PowerTag Energy

It is a wireless-communication energy sensor dedicated to:
- Energy Management
- Load Monitoring
- Power Availability applications.

It provides a class 1 solution to monitor energy at any level of a distribution panel, from load to main incomer.

Thanks to the wireless communication between PowerTag Energy Sensors and PowerTag Energy Link gateway, the solution can be quickly and easily installed in new or existing panels.

Main features
Real time measurement (saved in the sensors):
- U, V, I (up to 2000 A)
- P, PF and energy values
- Diagnostics, alarming.

PowerTag Energy - Main components

Measurement - PowerTag Energy sensors
Voltages and currents are measured and processed by a sensor:
1. PowerTag Energy Monoconnect: directly mounted on the device terminals, upstream (Acti9, Multi9 only) or downstream (Acti9, Multi9, TeSys Deca - Frame 5, 6 circuit breakers
2. PowerTag Energy Phase Neutral: sensor is crossed by the conductors, voltage pickup connector mounted on device terminals
3. PowerTag Energy Flex: sensor is crossed by the conductors
4. PowerTag Energy Rope: fixed on bar conductors.

Processing and communication – PowerTag Energy Link
The system works with a concentrator or a gateway:
- to collect data from the sensors
- to process data
- to provide additional alarms
- and make them available via Ethernet.



PowerTag Energy Link



Connection (voltage and current)	Features
Upstream	■ Energy management: consumption in kWh ■ Load monitoring: real-time measurements
Downstream Preferred installation to take full benfit of voltage loss alarming in diagnosing the load	■ Energy management: consumption in kWh ■ Load monitoring: real-time measurements ■ Power availability: voltage loss alarming

Note:
In combination with a contactor, Variable Speed Drive or motor starter: PowerTag Energy can ONLY be installed UPSTREAM of these devices.
Select the PowerTag Energy devices, check the possible mounting positions in the PowerLogic – PowerTag Energy - Selection guide.

Scan or Click to download:

> PowerLogic - PowerTag Energy - Selection guide

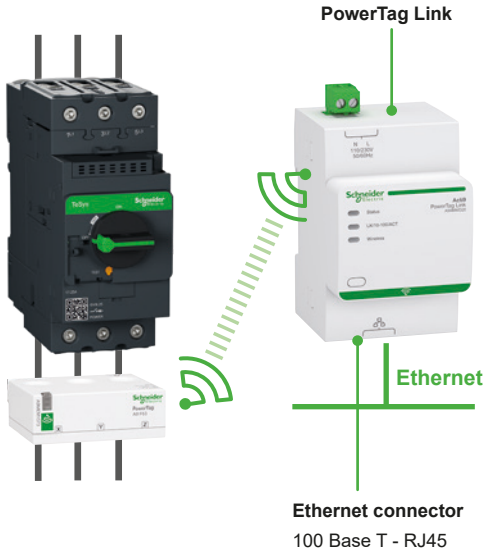

Communication between PowerTag Energy Flex 63 A and PowerTag Link ref. A9XMWD20



A9MEM1573 *A9MEM1570*

PowerTag Flex 63 A (terminals are for voltage measurement)

Energy measurement – PowerLogic

PowerTag Energy Flex 63 A (F63)

As per IEC 61557-12 PMD-II/DD/K55/1 standard:
with its flex design this PowerTag Energy can be used below a **Deca Motor circuit breakers Frame 2, 3-type (ref. GV2●●●, GV3●●●)** up to 63 A on 3P or 3P + N networks. The voltage picking is done by mean of 3 (3P) or 4 (3P + N) terminals. The shapes for brackets allow to mount and maintain it where needed in a panel.

Main characteristics

PowerTag Energy measures the following values in accordance with the IEC 61557-12 standard PMD-I/DD/K55/1.
Energy:
■ Active energy (kWh): total and partial, delivered and received.
Real-time measurement values:
■ Voltages (V): phase-to-phase and phase-to-neutral
■ Currents (A): per phase.
■ Power:
□ Active power (W): total and per phase
□ Apparent power (VA): total
■ Power factor.
Voltage loss alarms:
■ PowerTag Energy sends a 'voltage loss' alarm and the current-per-phase value before being de-energized
■ At 'voltage loss', PowerTag Energy adds an overload alarm if the current is higher than the rated current of the associated protective device.
Note: *functions listed above depends on Concentrator/Gateway.*

Description	Reference
PowerTag Energy Flex 63 A 3P	**A9MEM1573**
PowerTag Energy Flex 63 A 3P+N	**A9MEM1570**

Installation

Neutral picking shall be connected to have phase-to-neutral voltages, energy per phase and power per phase provided.

The existing PowerTag cable ends have been designed for screw terminals for 16 mm^2.
To adapt PowerTag F63 to the different types of product terminals, it is possible to replace the PowerTag Energy voltage measurement terminals by other cable ends for WG22/0.33 mm^2 wire.

Scan or Click to download:

> PowerLogic - PowerTag Energy - Selection guide

Characteristics / Dimensions:
page B6/154

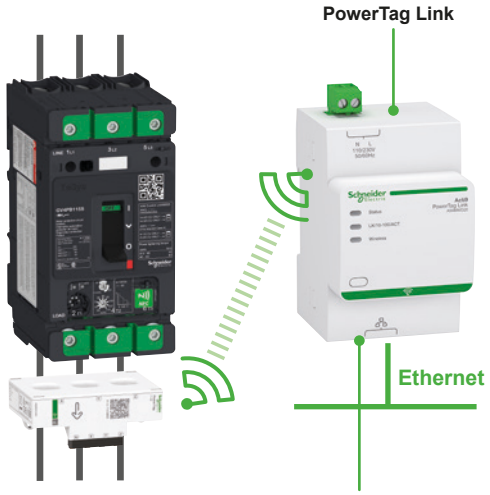

Communication between PowerTag Energy Flex 160 A and PowerTag Link ref. A9XMWD20

PB121658.eps



PowerTag Energy Flex 160 A Ref. A9MEM1580

Energy measurement – PowerLogic

PowerTag Energy Flex 160 A (F160)

As per IEC 61557-12 PMD-II/DD/K70/1 standard: with its flex design this PowerTag Energy can be used below a **Deca motor circuit breaker Frame 4 - type (ref GV4●●●●)** up to 160 A on 3P or 3P + N networks. Its removable spring connector for voltage picking facilitates its installation, and shapes for brackets allows to mount and maintain it where needed in a panel.

Main characteristics

PowerTag Energy Flex 160 A measures the following values in accordance with the IEC 61557-12 standard PMD-II/DD/K70/1.

■ Energy (4 quadrants):
□ Active energy (kWh): total and partial, delivered and received
□ Active energy per phase (kWh): total and partial, delivered and received
□ Reactive energy (kVARh): total and partial, delivered and received
□ Reactive energy per phase (kVARh): total and partial, delivered and received
□ Apparent energy (kVAh): total and partial
□ Apparent energy per phase (kVAh): total and partial.
■ Real-time measurement values:
□ Voltages (V): phase-to-phase (U12, U23, U31) and phase-to-neutral (V1N, V2N, V3N)
□ Currents (A): per phase (I1, I2, I3), calculated neutral current when connected (IN)
□ Power:
Active power (W): total and per phase
Reactive power (VAR): total and per phase
Apparent power (VA): total and per phase
□ Frequency (Hz).
□ Power factor: total and per phase.
■ Voltage loss alarms:
□ PowerTag Energy Flex sensor sends a 'voltage loss' alarm and the current-per phase value before being de-energized.
□ At 'voltage loss'', PowerTag Energy Flex adds an overload alarm if the current is higher than the rated current of the associated protective device.

***Note:** functions listed above depends on Concentrator/Gateway.*

Description	Reference
PowerTag Energy Flex 160 A 3P / 3P+N	**A9MEM1580**

Installation

PowerTag Energy Flex 160 A can be installed in a panel directly on cables or busbars, associated to a product or not. Voltage pickings removable spring terminal has to be wired by 1 copper wire per phase with following characteristics:

Wire range

Solid	Stranded	Stranded with terminals ends
0.2...1.5 mm²	0.2...2.5 mm²	0.25...1.5 mm²
24...16 AWG	24...14 AWG	24...16 AWG

If phase-to-neutral voltages, energy per phase and power per phase are needed, then a Neutral picking cable must be connected between the spring-type connector of the PowerTag Energy Flex and a Neutral in the control panel.

PowerTag Energy Flex 160 A is mainly advised for ComPact NSXm, ComPact INS160, Acti9 NG125, Acti9 C120, Power**Pact** B, TeSys Deca - Frame 4 - type circuit breaker, and all other devices with a rating between 63 A and 160 A.

Scan or Click to download:

> PowerLogic - PowerTag Energy - Selection guide

Characteristics / Dimensions:
page B6/155

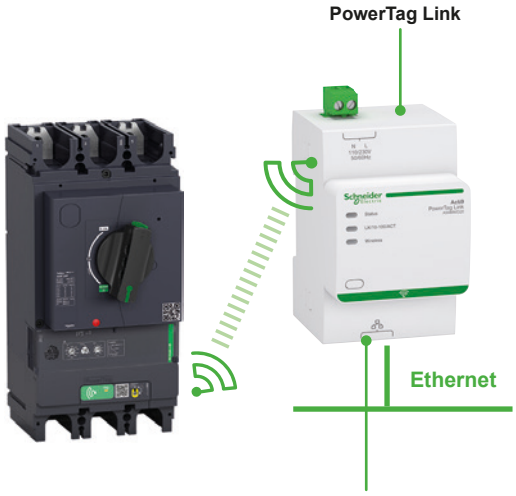

Communication between PowerTag Monoconnect M630 and PowerTag Link ref. A9XMWD20

Energy measurement – PowerLogic

PowerTag Energy Monoconnect 250 A (M250)
PowerTag Energy Monoconnect 630 A (M630)

As per IEC 61557-12 PMD-II/DD/K70/1 standard:
PowerTag Energy Monoconnect is directly mounted on the bottom side of a **TeSys Deca - Frame 4 or 5 circuit breaker**, for 3P and 3P+N electrical networks.
Thanks to its integrated design, it does not require any specific wiring, and is compatible with the same connection accessories than the device it is mounted on. In addition to monitoring and alarming, PowerTag solution provides a complete knowledge of real time electrical values with a rich and accurate data transfer every 5 seconds.
PowerTag Energy sensors can be quickly and easily installed in new or existing panels at any time. Compared to traditional metering solutions, installation time and commissioning are much shorter with no wiring, hence an error proof high density solution and a built-in class 1 accuracy.

Functions

PowerTag Energy sensor measures the following values in accordance with the IEC 61557-12 standard.
■ Energy (4 quadrants):
□ Active energy (kWh): total and partial, delivered and received
□ Active energy per phase (kWh): total
□ Reactive energy (kVARh): partial, delivered and received.
■ Real-time measurement values:
□ Voltages (V): phase-to-phase (U12, U23, U31) and phase-to-neutral (V1N, V2N, V3N)
□ Currents (A): per phase (I1, I2, I3).
■ Power:
□ Active power (W): total and per phase
□ Reactive power (VAR): total
□ Apparent power (VA): total.
■ Frequency (Hz)
■ Power factor
■ Voltage loss alarm:
□ PowerTag Energy sends a "voltage loss" alarm and the current-per-phase value before being de-energized
□ At 'voltage loss', PowerTag adds an overload alarm if the current is higher than the rated current of the associated protective device.
Note: *functions listed above depends on Concentrators/Gateways.*



LV434020



LV434022

Description	Reference
PowerTag Monoconnect M250 3P: suitable for GV5 up to 220 A	**LV434020**
PowerTag Monoconnect M630 3P: suitable for GV6 up to 500 A	**LV434022**

Installation

The module is self-powered and is installed for fixed devices directly on the bottom side of the circuit breaker or Vigi add-on terminals. For plug-in devices, it has to be installed on the base itself, top or bottom.
PowerTag Energy M250/M630 3P has to be used with 3P devices, and an external neutral voltage tap is provided in case of the installation has a neutral to provide phase-to-neutral voltages, active energy per phase and power per phase.
PowerTag Energy M250/M630 3P + N has to be used with 4P devices and with ComPact INS/INV switches.

In case of retrofit, following points have to been checked:
■ Clearance to be able to add PowerTag Energy module and to respect bending radius of cables.
■ Condition of power connectors: to be replaced if damaged.
■ Tightening torques depending on the connector used.

Scan or Click to download:

> PowerLogic - PowerTag Energy - Selection guide

Characteristics / Dimensions:
page B6/156

Ethernet Connection Concentrator for PowerTag Energy sensors

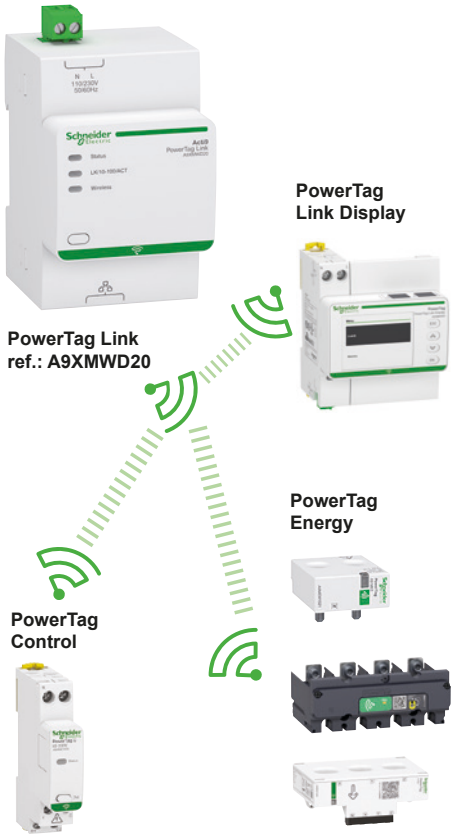

Energy measurement – PowerLogic

PowerTag Link

Ethernet connection concentrator (Modbus TCP/IP) for wireless devices with data display web pages.
The associated PowerTag Energy sensors allow alarms to be managed via email for terminal loads, and energy, power, current and voltage to be measured accurately in real time.
The associated PowerTag Control modules are designed to monitor and control a circuit and notify wirelessly to the concentrator the information status of a contact (OF, SD, CT or TL position indication...).
The associated PowerTag Link Display allows user to visualize data from energy sensors connected to the gateway.
The entire system can easily be installed in existing LV equipments using Multi9/ Acti9/Compact NSX type circuit breakers, TeSys and competitor's devices.

Data transmitted:
- Total and partial energy
- Active, apparent and reactive power, phase-to-phase and phase-to-neutral voltage
- Currents I1, I2, I3
- Power factor (cos φ)
- Voltage loss and overload information
- Control order to a circuit
- Information status of a contact.

Functions
PowerTag Link permits:
- Concentration of PowerTag Energy wireless sensor data
- Ethernet connection via the RJ45 port
- Load monitoring:
  - alarm sent by the energy sensor in the event of a voltage loss,
  - pre-alarms on predefined thresholds (50 %, 80 %) or customized thresholds (thresholds on currents, power, voltages and cumulative energies),
  - load running time counter,
  - power synthesis (kW),
  - Alarm management on current/voltage/load level thresholds by e-mail,
  - Send control orders to PowerTag Control output to operate a load remotely and get oad status thanks to feedback loop on associated input,
  - Collect status of contact from PowerTag Control input,
  - Display of alarms and pre-alarms on PowerTag Link embedded web pages,
  - Easy integration into system with Com'X 200, Com'X 510 and other Schneider Electric software and third-party Building Management Systems (BMS) thanks to EcoStruxure Power Commission report in pdf format. This report provides dynamically all the Modbus registers and associated meanings for an easy integration into the system,
  - Remote metering capability using the PowerTag Link monitoring page,
  - Send measured data and alarms to the PowerTag Link Display that can be installed locally.

Description	Reference
PowerTag Link	**A9XMWD2**

Installation
- On DIN rail (width 54 mm).
- 230 V AC power supply.

Testing and start-up
Pairing of wireless devices must be performed via the EcoStruxure Power Commission software, freely available by downloading.
- The software makes it possible, in particular, to attribute to each circuit a name, a use and the current rating (useful for alarms).

Commissioning software: EcoStruxure Power Commission (1)
- Configuration and communication test of wireless devices
- Editing of a complete test report (pdf) with the Modbus communication registers for easy integration into a supervision system
- Windows XP, Windows 7, Windows 8 and Windows 10 compatible
- Downloadable from: https://www.schneider-electric.com/ww/en/download/document/Ecoreach_Installer

(1) new name of Ecoreach software.

Scan or Click to download:
> PowerLogic - PowerTag Energy - Selection guide

Characteristics / Dimensions:
page B6/157

TeSys Modular circuit breakers

0.5 to 20 A

(for equipment and control circuits)



PB110899_20.eps



GB2CB

PB110901_20.eps



GB2CD

PB110902_20.eps



GB2DB

PB110900_20.eps



GB2CS

Introduction

Modular thermal-magnetic circuit breakers protect and isolate the control circuits of industrial equipment with contactor coils, transformers….
They protect and isolate single-phase auxiliary circuits such as solenoid valves, electro-brakes, battery chargers, supplied from the control circuit voltage.

Ref. GB2CB, GB2CD, GB2DB

12 ratings are available, from 0.5 to 20 A, in single-pole (GB2CB), single-pole + neutral (GB2CD) and 2-pole (GB2DB) versions.
They have a magnetic tripping threshold set at between 12 and 16 In to withstand the current peaks generated by many industrial components.

Ref. GB2CS

2 ratings are available, 0.5 and 1 A, in single-pole version.
The magnetic tripping threshold is set between 5 and 7 In.

Functions, installation

Clip-on fixing onto all types of 35 mm ⊥ rails, on ⊏ rails and on Telequick mounting plates.
Upstream and downstream marking by means of AB1 clip-in markers.
Clear indication of “I” and “O” positions on the operator.
Tamper-proof device which requires no special maintenance (fixed magnetic and thermal tripping thresholds).

Selection for the protection of circuits supplied by transformers

Single-phase transformers.
Magnetising peak: 20 In.
Operation of magnetic trips: 13 In.

Power	Primary (1)		Secondary			
VA	220/240 V	380/415 V	24 V	48 V	110 V	220 V
40	GB2DB05	GB2DB05	GB2CD07	GB2CD06	GB2CD05	GB2CD05
63	GB2DB05	GB2DB05	GB2CD08	GB2CD07	GB2CD06	GB2CD05
100	GB2DB06	GB2DB05	GB2CD10	GB2CD07	GB2CD06	GB2CD05
160	GB2DB07	GB2DB06	GB2CD14	GB2CD09	GB2CD07	GB2CD06
250	GB2DB07	GB2DB06	GB2CD16	GB2CD12	GB2CD08	GB2CD07
400	GB2DB08		GB2CD22	GB2CD14	GB2CD09	GB2CD07
630	GB2DB10	GB2DB08	–	GB2CD21	GB2CD12	GB2CD08
1000	GB2DB14	GB2DB09	–	–	GB2CD16	GB2CD10
1600	GB2DB20	GB2DB14	–	–	–	GB2CD14
2000	GB2DB21	GB2DB14	–	–	GB2CD22	GB2CD16
2500	GB2DB22	GB2DB20	–	–	–	GB2CD20
3000	GB2DB22	GB2DB20	–	–	–	GB2CD21
4000	–	GB2DB21	–	–	–	GB2CD22
5000	–	GB2DB22	–	–	–	–

*(1) If the breaking capacity of the **GB2** is insufficient, use a **GV2RT** with 2 poles connected in series.*

Product references

PB110899_20.eps



GB2CB●●

Circuit breakers with magnetic tripping threshold: 12 to 16 In

Single-pole

Conventional rated thermal current Ith (1)	Magnetic tripping current Id ± 20 %	Sold in lots of	Unit reference
A	A		
0.5	6.6	6	**GB2CB05**
1	14	6	**GB2CB06**
2	26	6	**GB2CB07**
3	40	6	**GB2CB08**
4	52	6	**GB2CB09**
5	66	6	**GB2CB10**
6	83	6	**GB2CB12**
8	108	6	**GB2CB14**
10	138	6	**GB2CB16**
12	165	6	**GB2CB20**
16	220	6	**GB2CB21**
20	270	6	**GB2CB22**

PB110901_20.eps



GB2CD●●

Single-pole + neutral

Conventional rated thermal current Ith (1)	Magnetic tripping current Id ± 20 %	Sold in lots of	Unit reference
A	A		
0.5	6.6	6	**GB2CD05**
1	14	6	**GB2CD06**
2	26	6	**GB2CD07**
3	40	6	**GB2CD08**
4	52	6	**GB2CD09**
5	66	6	**GB2CD10**
6	83	6	**GB2CD12**
8	108	6	**GB2CD14**
10	138	6	**GB2CD16**
12	165	6	**GB2CD20**
16	220	6	**GB2CD21**
20	270	6	**GB2CD22**

PB110902_20.eps



GB2DB●●

2-pole

Conventional rated thermal current Ith (1)	Magnetic tripping current Id ± 20 %	Sold in lots of	Unit reference
A	A		
0.5	6.6	3	**GB2DB05**
1	14	3	**GB2DB06**
2	26	3	**GB2DB07**
3	40	3	**GB2DB08**
4	50	3	**GB2DB09**
5	66	3	**GB2DB10**
6	83	3	**GB2DB12**
8	108	3	**GB2DB14**
10	138	3	**GB2DB16**
12	165	3	**GB2DB20**
16	220	3	**GB2DB21**
20	270	3	**GB2DB22**

(1) Conforming to IEC 60947-1.

Characteristics:
pages B6/160 to B6/162

Dimensions, schemes:
page B6/163

Product references

Circuit breakers with magnetic tripping threshold: 5 to 7 In

PB110900_20.eps



GB2CS●●

Single-pole

Conventional rated thermal current Ith (1)	Magnetic tripping current Id ± 20 %	Sold in lots of	Unit reference
A	A		
0.5	3.3	6	**GB2CS05**
1	6	6	**GB2CS06**

(1) Conforming to IEC 60947-1.

Accessories for circuit breakers ref. GB2-CB, DB and CS

PB121347.eps



GB2G210

Description	Sold in lots of	Unit reference
Busbar set for supply to 10 GB2 DB or 20 GB2CB or GB2CS with 2 connectors	1	**GB2G210**

Characteristics:
pages B6/160 to B6/162

Dimensions, schemes:
page B6/163

Life Is On Schneider Electric

Product references

29450
29452
GB2CB05
GB2CB06
GB2CB07
GB2CB08
GB2CB09
GB2CB10
GB2CB12
GB2CB14
GB2CB16
GB2CB20
GB2CB21
GB2CB22
GB2CD05
GB2CD06
GB2CD07
GB2CD08
GB2CD09
GB2CD10
GB2CD12
GB2CD14
GB2CD16
GB2CD20
GB2CD21
GB2CD22
GB2CS05
GB2CS06
GB2DB05
GB2DB06
GB2DB07
GB2DB08
GB2DB09
GB2DB10
GB2DB12
GB2DB14
GB2DB16
GB2DB20
GB2DB21
GB2DB22
GB2G210
GK2AF01
GK2AX50
GV1F03
GV1G02
GV1L3
GV1V02
GV2AF01
GV2AF02
GV2AF3
GV2AF4
GV2AF5
GV2AK00
GV2AP01
GV2AP02
GV2AP03
GV2AP04
GV2APK01
GV2APN01
GV2APN02
GV2APN03
GV2APN04
GV2CP21
GV2GH7
GV2L03
GV2L04
GV2L05
GV2L06
GV2L07
GV2L08
GV2L10
GV2L14
GV2L16
GV2L20
GV2L22
GV2L32
GV2LE03
GV2LE04
GV2LE05
GV2LE06
GV2LE07
GV2LE08
GV2LE10
GV2LE14
GV2LE16
GV2LE20
GV2LE22
GV2LE32
GV2ME01
GV2ME013
GV2ME016
GV2ME01AP
GV2ME02
GV2ME023
GV2ME02AP
GV2ME03
GV2ME033
GV2ME036
GV2ME03AP
GV2ME04
GV2ME043
GV2ME046
GV2ME04AP
GV2ME05
GV2ME053
GV2ME056
GV2ME05AP
GV2ME06
GV2ME063
GV2ME066
GV2ME06AP
GV2ME07
GV2ME073
GV2ME076
GV2ME07AP
GV2ME08
GV2ME083
GV2ME086
GV2ME08AP
GV2ME10
GV2ME103
GV2ME106
GV2ME10AP
GV2ME14
GV2ME143
GV2ME146
GV2ME14AP
GV2ME16
GV2ME163
GV2ME166
GV2ME16AP
GV2ME20
GV2ME203
GV2ME206
GV2ME20AP
GV2ME21
GV2ME213
GV2ME216
GV2ME21AP
GV2ME22
GV2ME223
GV2ME226
GV2ME22AP
GV2ME32
GV2ME323S
GV2ME326
GV2ME32AP
GV2P01
GV2P02
GV2P03
GV2P04
GV2P05
GV2P06
GV2P07
GV2P08
GV2P10
GV2P14
GV2P16
GV2P20
GV2P21
GV2P22
GV2P32
GV2PC01
GV2PC02
GV2RT03
GV2RT04
GV2RT05
GV2RT053
GV2RT06
GV2RT07
GV2RT073
GV2RT08
GV2RT10
GV2RT14
GV2RT16
GV2RT20
GV2RT21
GV2SN14
GV2SN15
GV2SN17
GV2SN35
GV2SN37
GV2V03
GV3A02
GV3A03
GV3A08
GV3A09
GV3APK01
GV3APN01
GV3D22
GV3G66
GV3L25
GV3L32
GV3L326
GV3L40
GV3L50
GV3L65
GV3L73
GV3L80
GV3P13
GV3P18
GV3P25
GV3P256
GV3P32
GV3P321
GV3P40
GV3P401
GV3P406
GV3P50
GV3P501
GV3P506
GV3P65
GV3P651
GV3P656
GV3P73
GV3P731
GV3P736
GV3P80
GV3PC01
GV3PC02
GV4ADM1111
GV4ADN01
GV4ADN02
GV4AE11
GV4APN01
GV4APN02
GV4APN04
GV4AS027
GV4AS057
GV4AS137
GV4AS287
GV4AS487
GV4AU027
GV4AU057
GV4AU137
GV4AU247
GV4AU286
GV4AU415
GV4AU486
GV4G66
GV4L02N
GV4L02N6
GV4L03N
GV4L03N6
GV4L07N
GV4L07N6
GV4L115B
GV4L115B6
GV4L115N
GV4L115N6
GV4L115S
GV4L12N
GV4L12N6
GV4L25B
GV4L25B6
GV4L25N
GV4L25N6
GV4L50B
GV4L50B6
GV4L50N
GV4L50N6
GV4L80B
GV4L80B6
GV4L80N
GV4L80N6
GV4L80S
GV4LE02N
GV4LE02N6
GV4LE02S
GV4LE02S6
GV4LE03N
GV4LE03N6
GV4LE03S
GV4LE03S6
GV4LE07N
GV4LE07N6
GV4LE07S
GV4LE07S6
GV4LE115B
GV4LE115B6
GV4LE115N
GV4LE115N6
GV4LE115S
GV4LE115S6
GV4LE12N
GV4LE12N6
GV4LE12S
GV4LE12S6

This document is current. Click on the product reference to get the most recent availability status (hyperlink to **se.com** product datasheet).
If your product variant is no longer available, please consult your distributor or regional sales office.

Product references

GV4LE25B
GV4LE25B6
GV4LE25N
GV4LE25N6
GV4LE25S
GV4LE25S6
GV4LE50B
GV4LE50B6
GV4LE50N
GV4LE50N6
GV4LE50S
GV4LE50S6
GV4LE80B
GV4LE80B6
GV4LE80N
GV4LE80N6
GV4LE80S
GV4LE80S6
GV4LUG
GV4P02N
GV4P02N6
GV4P03N
GV4P03N6
GV4P07N
GV4P07N6
GV4P115B
GV4P115B6
GV4P115N
GV4P115N6
GV4P115S
GV4P12N
GV4P12N6
GV4P25B
GV4P25B6
GV4P25N
GV4P25N6
GV4P50B
GV4P50B6
GV4P50N
GV4P50N6
GV4P80B
GV4P80B6
GV4P80N
GV4P80N6
GV4P80S
GV4PB02N
GV4PB02S
GV4PB03N
GV4PB03S
GV4PB07N
GV4PB07S
GV4PB115B
GV4PB115N
GV4PB115S
GV4PB12N
GV4PB12S
GV4PB25B
GV4PB25N
GV4PB25S
GV4PB50B
GV4PB50N
GV4PB50S
GV4PB80B
GV4PB80N
GV4PB80S
GV4PE02N
GV4PE02N6
GV4PE02S
GV4PE02S6
GV4PE03N
GV4PE03N6
GV4PE03S
GV4PE03S6
GV4PE07N
GV4PE07N6
GV4PE07S
GV4PE07S6
GV4PE115B
GV4PE115B6
GV4PE115N
GV4PE115N6
GV4PE115S
GV4PE115S6
GV4PE12N
GV4PE12N6
GV4PE12S
GV4PE12S6
GV4PE25B
GV4PE25B6
GV4PE25N
GV4PE25N6
GV4PE25S
GV4PE25S6
GV4PE50B
GV4PE50B6
GV4PE50N
GV4PE50N6
GV4PE50S
GV4PE50S6
GV4PE80B
GV4PE80B6
GV4PE80N
GV4PE80N6
GV4PE80S
GV4PE80S6
GV4PEM02N
GV4PEM02N6
GV4PEM02S
GV4PEM02S6
GV4PEM03N
GV4PEM03N6
GV4PEM03S
GV4PEM03S6
GV4PEM07N
GV4PEM07N6
GV4PEM07S
GV4PEM07S6
GV4PEM115B
GV4PEM115B6
GV4PEM115N
GV4PEM115N6
GV4PEM115S
GV4PEM115S6
GV4PEM12N
GV4PEM12N6
GV4PEM12S
GV4PEM12S6
GV4PEM25B
GV4PEM25B6
GV4PEM25N
GV4PEM25N6
GV4PEM25S
GV4PEM25S6
GV4PEM50B
GV4PEM50B6
GV4PEM50N
GV4PEM50N6
GV4PEM50S
GV4PEM50S6
GV4PEM80B
GV4PEM80B6
GV4PEM80N
GV4PEM80N6
GV4PEM80S
GV4PEM80S6
GV5AP03
GV5P150F
GV5P150H
GV5P220F
GV5P220H
GV6AP03
GV6P320F
GV6P320H
GV6P500F
GV6P500H
GV7AC01
GV7AC021
GV7AC022
GV7AC03
GV7AC04
GV7AC05
GV7AC06
GV7AC08
GV7AP01
GV7AP02
GV7AP04
GV7AP05
GVAD0101
GVAD0110
GVAD1001
GVAD1010
GVAE1
GVAE11
GVAE113
GVAE20
GVAE203
GVAED011
GVAED0113
GVAED101
GVAED1013
GVAM11
GVAN11
GVAN113
GVAN20
GVAN203
GVAPA2
GVAPBPHP
GVAPH02
GVAPK11
GVAPYPHP
GVAS025
GVAS026
GVAS055
GVAS115
GVAS116
GVAS207
GVAS225
GVAS226
GVAS385
GVAS415
GVAU025
GVAU055
GVAU115
GVAU116
GVAU125
GVAU207
GVAU225
GVAU226
GVAU385
GVAU386
GVAU415
GVAU416
GVAU505
GVAX115
GVAX116
GVAX225
GVAX226
GVAX385
GVAX386
GVAX415
LA9E07
LAD311
LAD96590
LAD96595
LV429385
LV429386
LV429387
LV429388
LV429405
LV429406
LV429407
LV429408

This document is current. Click on the product reference to get the most recent availability status (hyperlink to **se.com** product datasheet). If your product variant is no longer available, please consult your distributor or regional sales office.

Technical Data for Designers

Deca - Frame 2:
> characteristics ..... B6/72 to B6/76
> curves ..... B6/77 to B6/86
> characteristics - accessories ..... B6/87 to B6/89
> dimensions, schemes ..... B6/90 to B6/99

Deca - Frame 3:
> characteristics ..... B6/102 to B6/105
> curves ..... B6/106 to B6/111
> characteristics - accessories ..... B6/112 to B6/114
> dimensions, schemes ..... B6/115 to B6/117

Deca - Frame 4:
> characteristics ..... B6/120 to B6/123
> curves ..... B6/124 to B6/131
> characteristics - accessories ..... B6/132 to B6/133
> dimensions, schemes ..... B6/134 to B6/137

Giga - Frame 5 - Frame 6:
> characteristics B6/140
> curves ..... B6/141 to B6/143
> characteristics - accessories ..... B6/144 to B6/145
> dimensions, schemes ..... B6/146 to B6/152

PowerTag Energy sensors:
> PowerTag Energy Flex 63 A B6/154
> PowerTag Energy Flex 160 A B6/155
> PowerTag Energy Monoconnect 250 A B6/156
> PowerTag Energy Link B6/157

Modular:
> characteristics ..... B6/160 to B6/162
> dimensions, schemes B6/163

TeSys Deca - Frame 2

0.06 to 15 kW



Characteristics

Environment

Circuit breaker type				GV2L	GV2LE	GV2ME	GV2P	GV2RT
Conforming to standards				IEC/EN 60947-4-1, IEC/EN 60947-2				
				CSA C22.2 n°60947-4-1 (1), UL 60947-4-1				
Product certifications				CCC, EAC, BV, LROS, DNV-GL, RINA, UL (1), CSA, UKCA	CCC, EAC, BV, RINA, UL (1), UKCA	CCC, UL, CSA, EAC, ATEX, BV, LROS, UKCA, DNV-GL, RINA	CCC, UL, CSA, EAC, ATEX, BV, LROS, DNV-GL, RINA, UKCA	CCC, UL, CSA, EAC, BV, LROS, UKCA
Climatic withstand				According to IACS E10				
Degree of protection (front face)	Conforming to IEC 60529	Open mounted		Against direct finger contact: IP20				
		In enclosure		IP65 with GV2PC01 GV2PC02 enclosure	-	IP41 with GV2M●01 IP55 with GV2M●02 enclosure	IP 65 with GV2PC01 GV2PC02 enclosure	-
Shock resistance	Conforming to IEC 60068-2-27			30 gn - 11 ms				
Vibration resistance	Conforming to IEC 60068-2-6			5 gn (5 to 150 Hz)				
Ambient air temperature	Storage		°C	-40…+80				
	Operation	Open mounted	°C	-20…+60				
		In enclosure	°C	-20…+40				
Temperature compensation		Open mounted	°C	-20…+60				
		In enclosure	°C	-20…+40				
Flame resistance	Conforming to IEC 60695-2-11		°C	960				
Maximum operating altitude			m	2000				
Suitable for isolation	Conforming to IEC 60947-1 § 7-1-6			Yes				
Resistance to mechanical impact			J	0.5				
				IK04				
Sensitivy to phase failure				Yes, conforming to IEC 60947-4-1 § 8-2-1-5-2 for GV2ME & GV2P				

Technical characteristics

Circuit breaker type				GV2L	GV2LE	GV2ME	GV2P	GV2RT
Utilisation category	Conforming to IEC 60947-2			A				
	Conforming to IEC 60947-4-1			AC-3				
Rated operational voltage (Ue)	Conforming to IEC 60947-2		V	690				
Rated insulation voltage (Ui)	Conforming to IEC 60947-2		V	690				
Rated voltage	Conforming to UL 60947-4-1		V	-	-	600	600	600
	CSA C 22.2 n° 60947-4-1			480	480	600	600	600
Rated operational frequency	Conforming to IEC 60947-4-1 UL, CSA		Hz	50/60				
Rated impulse withstand voltage (U imp)	Conforming to IEC 60947-2		kV	6				
Total power dissipated per pole			W	1.8		2.5		
Mechanical durability (C.O.: Closing, Opening)			C.O.	100 000				
Electrical durability for AC-3/415V duty (C.O.: Closing, Opening)	415 V In		C.O.	100 000				
Duty class (maximum operating rate)			C.O./h	40		25		
Maximum conventional rated thermal current (Ith)	Conforming to IEC 60947-4-1		A	0.4...32	0.4...32	0.16...32	0.16...32	0.40...23
Rated duty	Conforming to IEC 60947-4-1			Continuous duty				

*(1) **GV2L03** to **GV2L22**, **GV2LE03** to **GV2LE22**.*
*(2) UL 60947-4-1 type E for **GV2P●●** (except 32 A).*

Ref.
Motor circuit breakers

References:
pages B6/11 to B6/18
Curves:
pages B6/77 to B6/86
Dimensions:
pages B6/90 to B6/99

Mounting characteristics

Operating position
Without derating, in relation to normal vertical mounting plane (1)

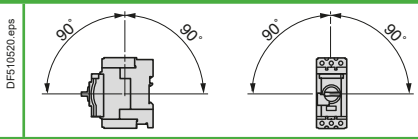

Products side by side

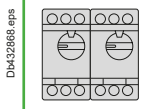

When several products **GV2ME●●**, **GV2P●●**, **GV2RT●●** are mounted side by side, the thermal trip setting Ir maybe need to be adjusted up to 1.1xIn.

Do not exceed the maximum thermal setting Ir.
E.g: **GV2ME14**, thermal setting range: 6...10, do not adjust Ir above 10 A.

Connection characteristics

Connection to screw clamp terminals or spring terminals

Bare cables

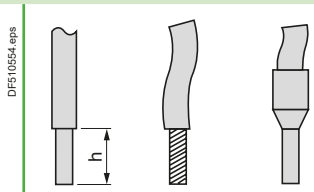

Circuit breaker type			GV2L		GV2LE		GV2ME		GV2P		GV2RT	
			Min.	Max.	Min.	Max.	Min.	Max.	Min.	Max.	Min.	Max.
Connection to screw clamp terminals (Max. number of conductors x c.s.a.)	Solid cable	mm²	2 x 1	2 x 6	2 x 1	2 x 6	2 x 1	2 x 6	2 x 1	2 x 6	2 x 1	2 x 6
	Flexible cable without cable end	mm²	2 x 1.5	2 x 6	2 x 1.5	2 x 6	2 x 1.5	2 x 6	2 x 1.5	2 x 6	2 x 1.5	2 x 6
	Flexible cable with cable end	mm²	2 x 1	2 x 4	2 x 1	2 x 4	2 x 1	2 x 4	2 x 1	2 x 4	2 x 1	2 x 4
Tightening torque		N.m	1.7									
Connection to spring terminals Number of conductors x c.s.a.	Solid cable	mm²	–	–	–	–	2 x 1 (2)	2 x 6	–	–	–	–
	Flexible cable without cable end	mm²	–	–	–	–	2 x 1.5 (2)	2 x 4	–	–	–	–

Connection by bars or lugs

Bars or lugs

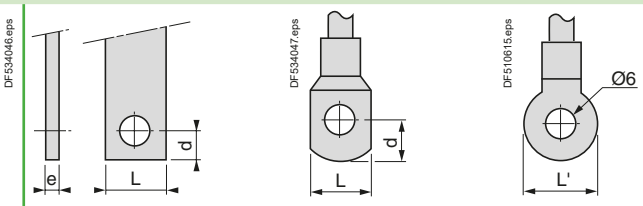

Circuit breaker type			GV2ME●●6
Pitch	Without spreaders	mm	13.5
	With spreaders	mm	–
Bars or cables with lugs	e	mm	≤ 6
	L	mm	≤ 9.5
	L'	mm	≤ 9.5
	d	mm	≤ 10
Screws			M4
	Tightening torque	N.m	1.7
Bare cables (copper or aluminium) with connectors	Height (h)	mm	–
	C.s.a.	mm²	–
	Tightening torque	N.m	–

(1) When mounting on a vertical rail, fit a stop to prevent any slippage.
*(2) For cross-sections 1 to 1.5 mm², the use of an **LA9D99** cable end reducer is recommended.*

References:
pages B6/11 to B6/18
Curves:
pages B6/77 to B6/86
Dimensions:
pages B6/90 to B6/99

Characteristics

Breaking capacity of GV2L and GV2LE

Circuit breaker type				GV2LE									GV2L								
				03 to 06	07	08	10	14	16	20	22	32	03 to 05	06 & 07	08	10	14	16	20	22	32
Rating			A	0.4 to 1.6	2.5	4	6.3	10	14	18	25	32	0.4 to 1	1.6 to 2.5	4	6.3	10	14	18	25	32
Breaking capacity conforming to IEC 60947-2	230/240 V	Icu	kA	★	★	★	★	★	★	★	50	50	★	★	★	★	★	★	★	50	50
		Ics % (1)		★	★	★	★	★	★	★	100	100	★	★	★	★	★	★	★	100	100
	400/415 V	Icu	kA	★	★	★	★	★	15	15	15	10	★	★	★	★	★	50	50	50	50
		Ics % (1)		★	★	★	★	★	50	50	40	50	★	★	★	★	★	50	50	50	50
	440 V	Icu	kA	★	★	★	50	15	8	8	6	6	★	★	★	★	20	20	20	20	20
		Ics % (1)		★	★	★	100	100	50	50	50	50	★	★	★	★	75	75	75	75	75
	500 V	Icu	kA	★	★	★	50	10	6	6	4	4	★	★	★	★	10	10	10	10	10
		Ics % (1)		★	★	★	100	100	75	75	75	75	★	★	★	★	100	75	75	75	75
	690 V	Icu	kA	★	3	3	3	3	3	3	3	3	★	4	4	4	4	4	4	4	4
		Ics % (1)		★	75	75	75	75	75	75	75	75	★	100	100	100	100	100	100	100	100
Associated fuses (if required) if Isc > breaking capacity Icu conforming to IEC 60947-2 amendment 1	230/240 V	aM	A	★	★	★	★	★	★	★	80	80	★	★	★	★	★	★	★	100	100
		gG	A	★	★	★	★	★	★	★	100	100	★	★	★	★	★	★	★	125	125
	400/415 V	aM	A	★	★	★	★	★	63	63	80	80	★	★	★	★	★	80	100	100	100
		gG	A	★	★	★	★	★	80	80	100	100	★	★	★	★	★	100	125	125	125
	440 V	aM	A	★	★	★	50	50	50	50	63	63	★	★	★	★	50	63	80	80	80
		gG	A	★	★	★	63	63	63	63	80	80	★	★	★	★	63	80	100	100	100
	500 V	aM	A	★	★	★	50	50	50	50	50	50	★	★	★	★	50	50	50	50	50
		gG	A	★	★	★	63	63	63	63	63	63	★	★	★	★	63	63	63	63	63
	690 V	aM	A	★	16	25	32	32	40	40	40	40	★	20	25	40	40	50	50	50	50
		gG	A	★	20	32	40	40	50	50	50	50	★	25	32	50	50	63	63	63	63
Cable protection against thermal stress in the event of short-circuit (PVC insulated copper cables) Minimum c.s.a. protected at 40 °C and at Isc max.	1 mm²		kA	●	●	●	≤10	≤ 6	(2)	(2)	(2)	(2)	●	●	●	≤10	≤ 6	(2)	(2)	(2)	(2)
	1.5 mm²		kA	●	●	●	≤20	≤10	(2)	(2)	(2)	(2)	●	●	●	≤20	≤10	(2)	(2)	(2)	(2)
	2.5 mm²			●	●	●	●	●	●	●	●	(2)	●	●	●	●	●	●	●	●	(2)
	4…6 mm²			●	●	●	●	●	●	●	●	●	●	●	●	●	●	●	●	●	●

★ *> 100 kA.*
● *Cable c.s.a. protected.*
(1) As % of Icu.
(2) Cable c.s.a. not protected.

Ref.
Motor circuit breakers

References:
pages B6/12 and B6/13
Curves:
pages B6/77 to B6/86
Dimensions:
pages B6/90 to B6/99

Characteristics

Breaking capacity of GV2ME, GV2RT and GV2P

Circuit breaker type				GV2ME and GV2RT									GV2P								
				01 to 06	07	08	10	14	16	20	21 & 22	32	01 to 06	07	08	10	14	16	20	21 & 22	32
Rating			A	0.1 to 1.6	2.5	4	6.3	10	14	18	23 & 25	32	0.1 to 1.6	2.5	4	6.3	10	14	18	23 & 25	32
Breaking capacity conforming to IEC 60947-2	230/240 V	Icu	kA	★	★	★	★	★	★	★	50	50	★	★	★	★	★	★	★	★	★
		Ics % (1)		★	★	★	★	★	★	★	100	100	★	★	★	★	★	★	★	★	★
	400/415 V	Icu	kA	★	★	★	★	★	15	15	15	10	★	★	★	★	★	★	50	50	50
		Ics % (1)		★	★	★	★	★	50	50	40	50	★	★	★	★	★	★	50	50	50
	440 V	Icu	kA	★	★	★	50	15	8	8	6	6	★	★	★	★	★	50	20	20	20
		Ics % (1)		★	★	★	100	100	50	50	50	50	★	★	★	★	★	75	75	75	75
	500 V	Icu	kA	★	★	★	50	10	6	6	4	4	★	★	★	★	50	42	10	10	10
		Ics % (1)		★	★	★	100	100	75	75	75	75	★	★	★	★	100	75	75	75	75
	690 V	Icu	kA	★	3	3	3	3	3	3	3	3	★	8	8	6	6	6	4	4	4
		Ics % (1)		★	75	75	75	75	75	75	75	75	★	100	100	100	100	100	100	100	100
Associated fuses (if required) if Isc > breaking capacity Icu conforming to IEC 60947-2	230/240 V	aM	A	★	★	★	★	★	★	★	80	80	★	★	★	★	★	★	★	★	★
		gG	A	★	★	★	★	★	★	★	100	100	★	★	★	★	★	★	★	★	★
	400/415 V	aM	A	★	★	★	★	★	63	63	80	80	★	★	★	★	★	★	100	100	100
		gG	A	★	★	★	★	★	80	80	100	100	★	★	★	★	★	★	125	125	125
	440 V	aM	A	★	★	★	50	50	50	50	63	63	★	★	★	★	★	50	63	80	80
		gG	A	★	★	★	63	63	63	63	80	80	★	★	★	★	★	63	80	100	100
	500 V	aM	A	★	★	★	50	50	50	50	50	50	★	★	★	★	50	50	50	50	50
		gG	A	★	★	★	63	63	63	63	63	63	★	★	★	★	63	63	63	63	63
	690 V	aM	A	★	16	25	32	32	40	40	40	40	★	20	25	40	40	50	50	50	50
		gG	A	★	20	32	40	40	50	50	50	50	★	25	32	50	50	63	63	63	63

★ > 100 kA.
(1) As % of Icu.

References:
pages B6/14 to B6/18

Curves:
pages B6/83 to B6/86

Dimensions:
pages B6/93 to B6/98

Characteristics

Breaking capacity of GV2ME, GV2RT and GV2P (used in association with current limiter GV1L3)

Circuit breaker type				GV2ME and GV2RT									
				01 to 06	07	08	10	14	16	20	21	22	32
Rating			A	0.1 to 1.6	2.5	4	6.3	10	14	18	23	25	32
Breaking capacity conforming to IEC 60947-2	230/240 V	Icu	kA	★	★	★	★	★	★	★	★	★	★
		Ics % (1)		★	★	★	★	★	★	★	★	★	★
	400/415 V	Icu	kA	★	★	★	★	★	100	100	100	100	100
		Ics % (1)		★	★	★	★	★	50	50	40	40	40
	440 V	Icu	kA	★	★	★	★	★	50	20	20	20	20
		Ics % (1)		★	★	★	★	★	75	75	75	75	75
	500 V	Icu	kA	★	★	★	★	50	42	10	10	10	10
		Ics % (1)		★	★	★	★	100	100	75	75	75	75

Circuit breaker type				GV2P									
				01 to 06	07	08	10	14	16	20	21	22	32
Rating			A	0.1 to 1.6	2.5	4	6.3	10	14	18	23	25	32
Breaking capacity conforming to IEC 60947-2	230/240 V	Icu	kA	★	★	★	★	★	★	★	★	★	★
		Ics % (1)		★	★	★	★	★	★	★	★	★	★
	400/415 V	Icu	kA	★	★	★	★	★	★	★	★	★	★
		Ics % (1)		★	★	★	★	★	★	★	★	★	★
	440 V	Icu	kA	★	★	★	★	★	100	100	100	100	100
		Ics % (1)		★	★	★	★	★	50	50	50	50	50
	500 V	Icu	kA	★	★	★	★	100	100	100	100	100	100
		Ics % (1)		★	★	★	★	50	50	50	50	50	50
	690 V (3)	Icu = Ics	kA	★	50	50	50	50	50	50	50	50	50

Circuit breaker type				GV2ME									
				01 to 06	07	08	10	14	16	20	21	22	32
Rating			A	0.1 to 1.6	2.5	4	6.3	10	14	18	23	25	32
Cable protection against thermal stress in the event of short-circuit (PVC insulated copper cables)	Minimum c.s.a. protected at 40 °C at Isc max.	1 mm²		●	●	●	⩽ 10 kA	⩽ 6 kA	(2)	(2)	(2)	(2)	(2)
		1.5 mm²		●	●	●	⩽ 20 kA	⩽ 10 kA	(2)	(2)	(2)	(2)	(2)
		2.5 mm²		●	●	●	●	●	●	●	●	●	(2)
		4…6 mm²		●	●	●	●	●	●	●	●	●	●

★ *> 100 kA.*
● *Cable c.s.a. protected.*
(1) As % of Icu.
(2) Cable c.s.a. not protected.
*(3) With limiter **LA9LB920**.*

References:
pages B6/14 to B6/18
Curves:
pages B6/83 to B6/86
Dimensions:
pages B6/93 to B6/98

Curves

Tripping curves for GV2L or LE combined with thermal overload relay LRD or LR2K

Average operating times at 20 °C related to multiples of the setting current

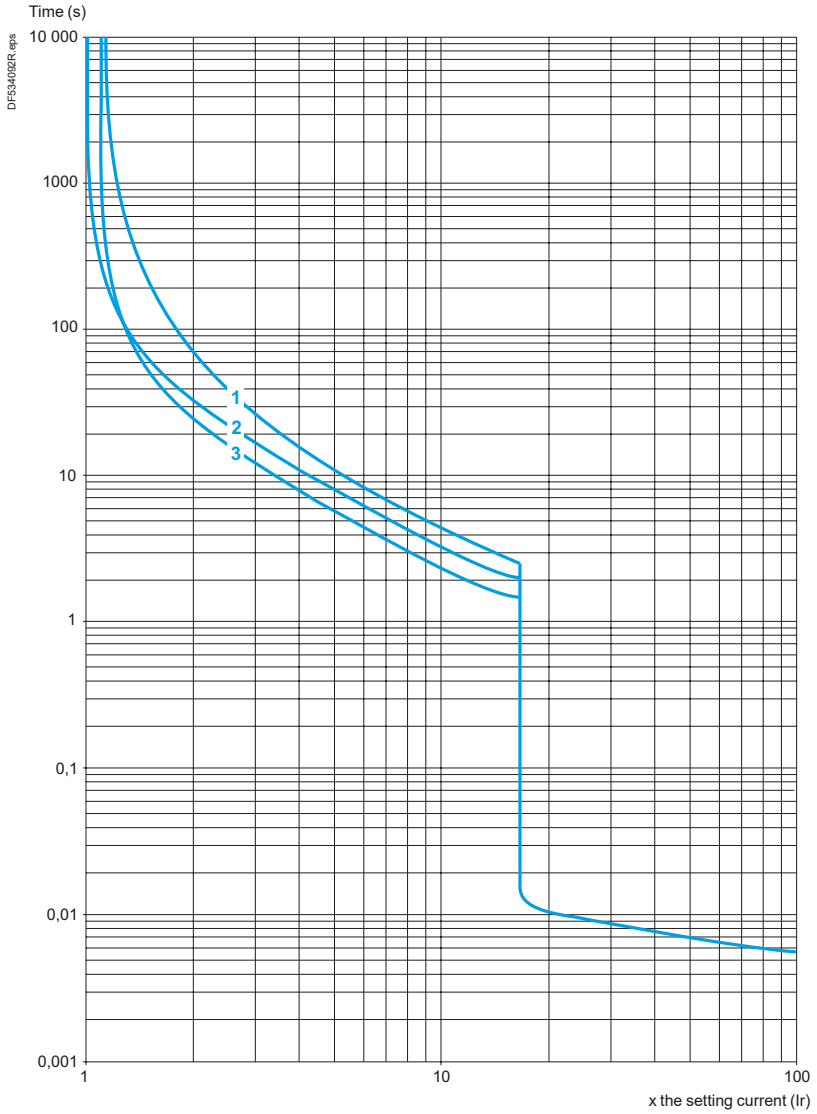

1 3 poles from cold state
2 2 poles from cold state
3 3 poles from hot state

Ref.
Motor circuit breakers

References:
pages B6/12 and B6/13
Characteristics:
pages B6/72 to B6/76
Dimensions:
pages B6/90 to B6/92, B6/99

Curves

Current limitation on short-circuit for GV2L and GV2LE only (3-phase 400/415 V)

Dynamic stress

I peak = f (prospective Isc) at 1.05 Ue = 435 V

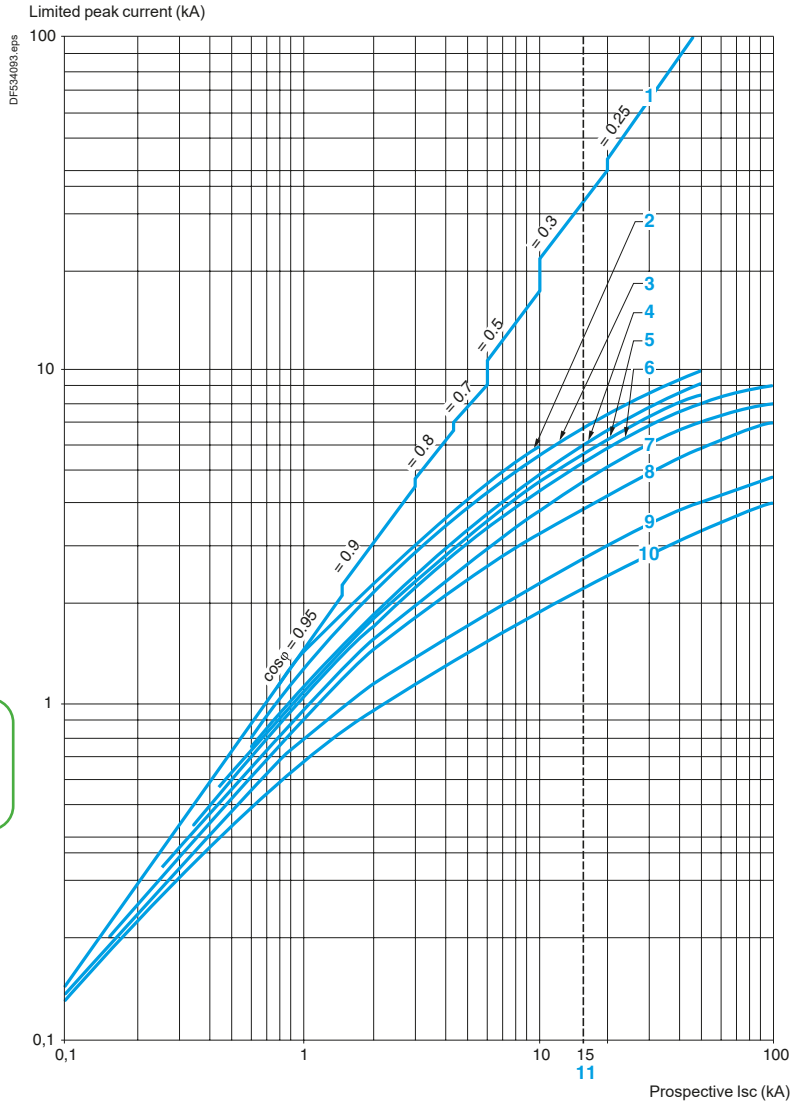

1 Maximum peak current
2 32 A
3 25 A
4 18 A
5 14 A
6 10 A
7 6.3 A
8 4 A
9 2.5 A
10 1.6 A
11 Limit of rated ultimate breaking capacity on short-circuit of GV2LE (14, 18, 23 and 25 A ratings).

Ref.
Motor circuit breakers

Curves

Current limitation on short-circuit for GV2L and GV2LE + thermal overload relay LRD or LR2K (3-phase 400/415 V)

Dynamic stress

I peak = f (prospective Isc) at 1.05 Ue = 435 V

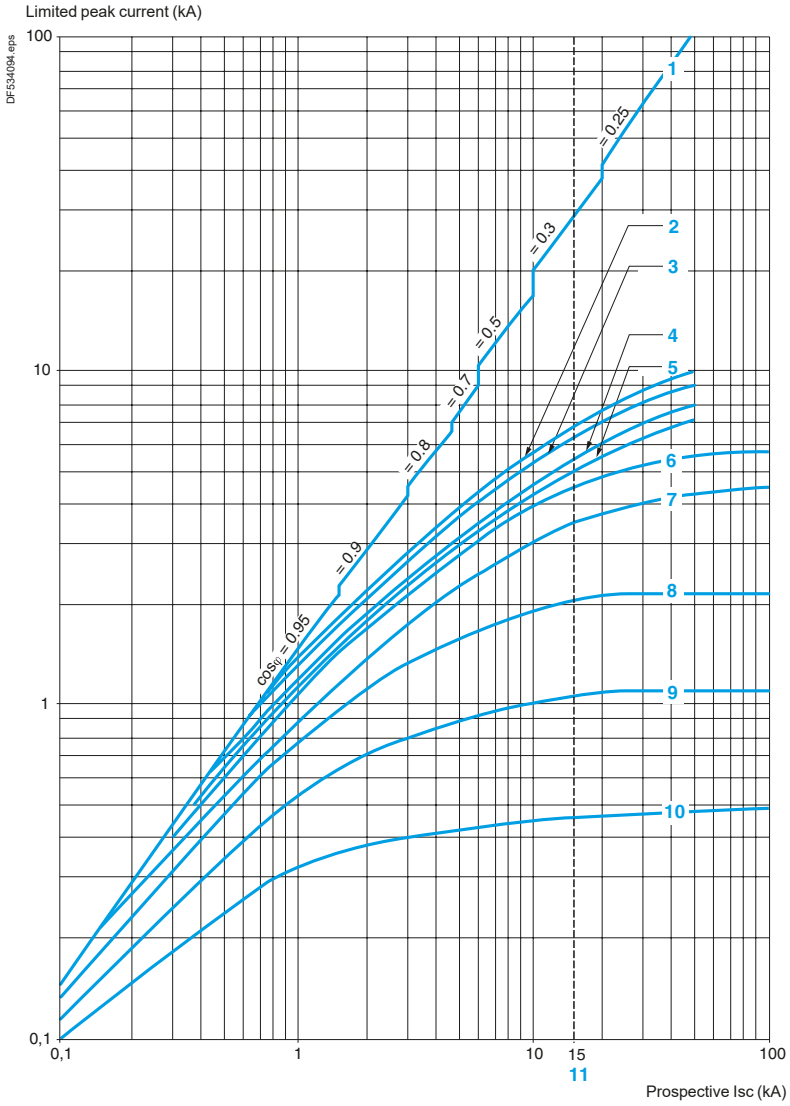

1 Maximum peak current
2 32 A
3 25 A
4 18 A
5 14 A
6 10 A
7 6.3 A
8 4 A
9 2.5 A
10 1.6 A
11 Limit of rated ultimate breaking capacity on short-circuit of GV2LE (14, 18, 23 and 25 A ratings).

References:
pages B6/12 and B6/13
Characteristics:
pages B6/72 to B6/76
Dimensions:
pages B6/90 to B6/92, B6/99

Curves

Thermal limit on short-circuit for GV2LE only

Thermal limit in kA²s in the magnetic operating zone

Sum of I²dt = f (prospective Isc) at 1.05 Ue = 435 V

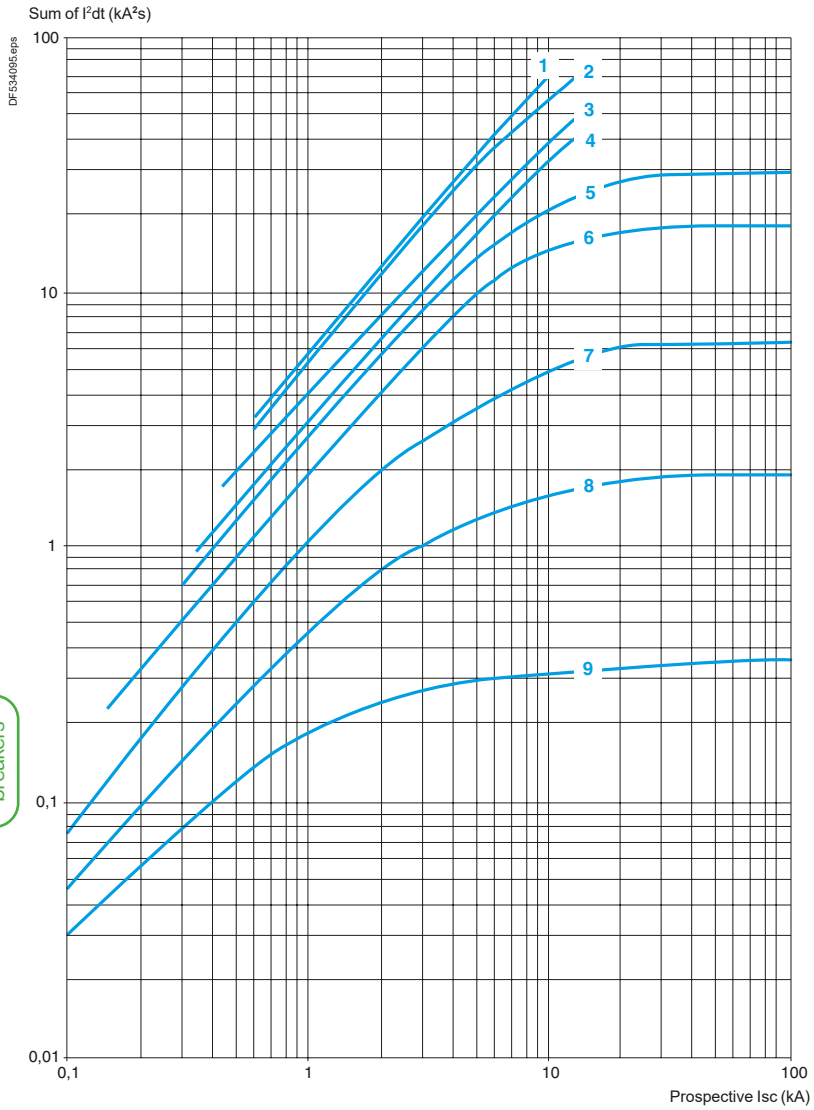

1 32 A
2 25 A
3 18 A
4 14 A
5 10 A
6 6.3 A
7 4 A
8 2.5 A
9 1.6 A

Ref.
Motor circuit breakers

Curves

Thermal limit on short-circuit for GV2L only

Thermal limit in kA²s in the magnetic operating zone

Sum of I²dt = f (prospective Isc) at 1.05 Ue = 435 V

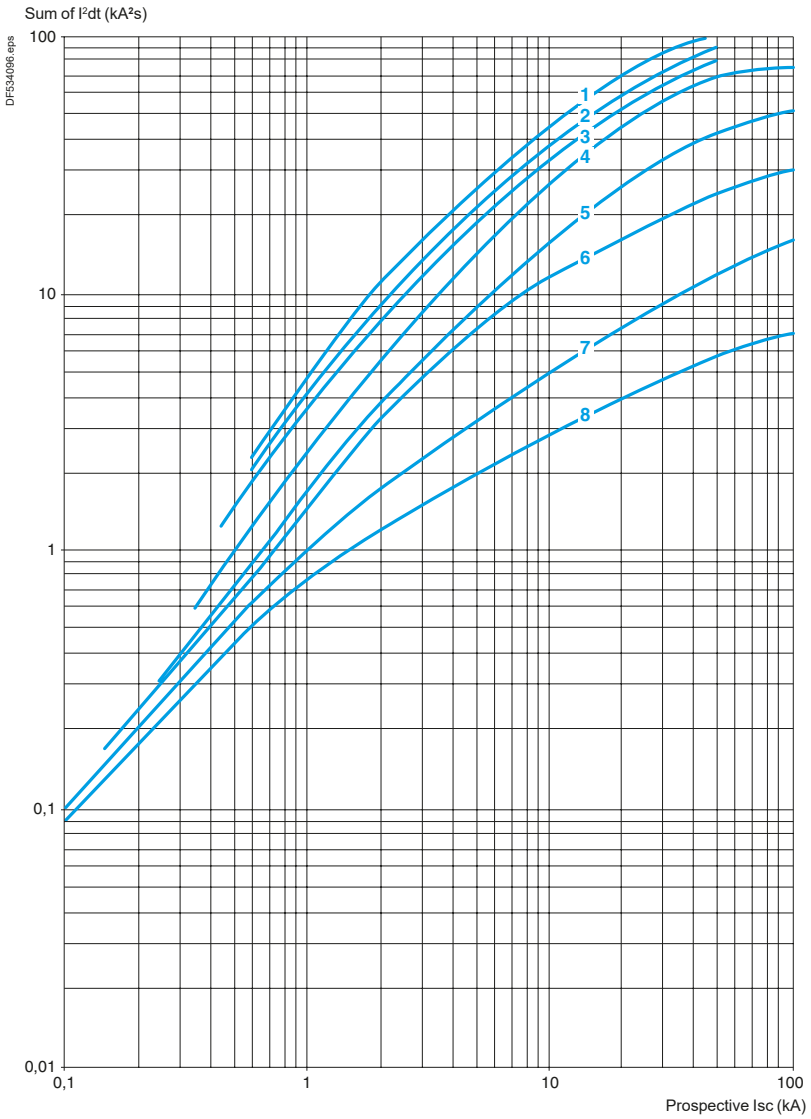

1 25 A and 32 A
2 18 A
3 14 A
4 10 A
5 6.3 A
6 4 A
7 2.5 A
8 1.6 A

Ref.
Motor circuit breakers

Curves

Thermal limit on short-circuit for GV2L and GV2LE + thermal overload relay LRD or LR2K

Thermal limit in kA²s in the magnetic operating zone

Sum of I²dt = f (prospective Isc) at 1.05 Ue = 435 V

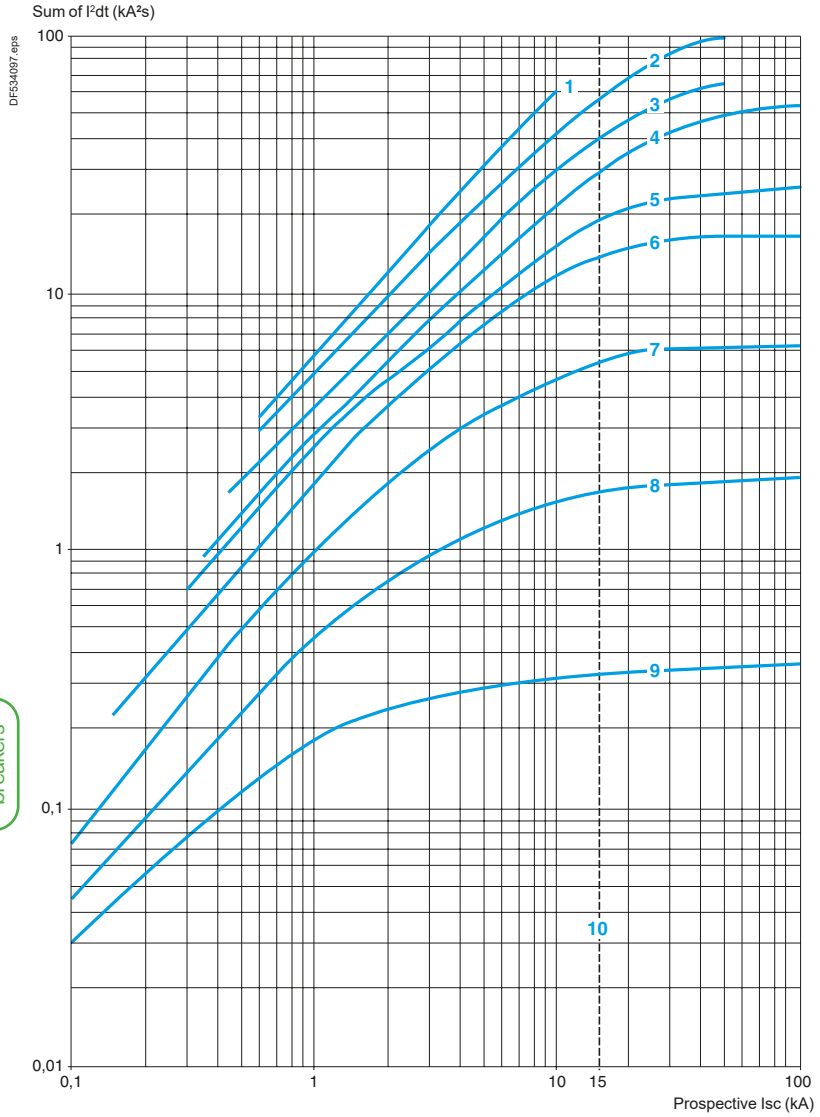

1 32 A (GV2LE32)
2 25 A and 32 A (GV2L32)
3 18 A
4 14 A
5 10 A
6 6.3 A
7 4 A
8 2.5 A
9 1.6 A
10 Limit of rated ultimate breaking capacity on short-circuit of GV2LE (14, 18, 23 and 25 A ratings).

Ref.
Motor circuit breakers

Curves

Thermal-magnetic tripping curves for GV2ME, GV2RT and GV2P

Average operating times at 20 °C related to multiples of the setting current

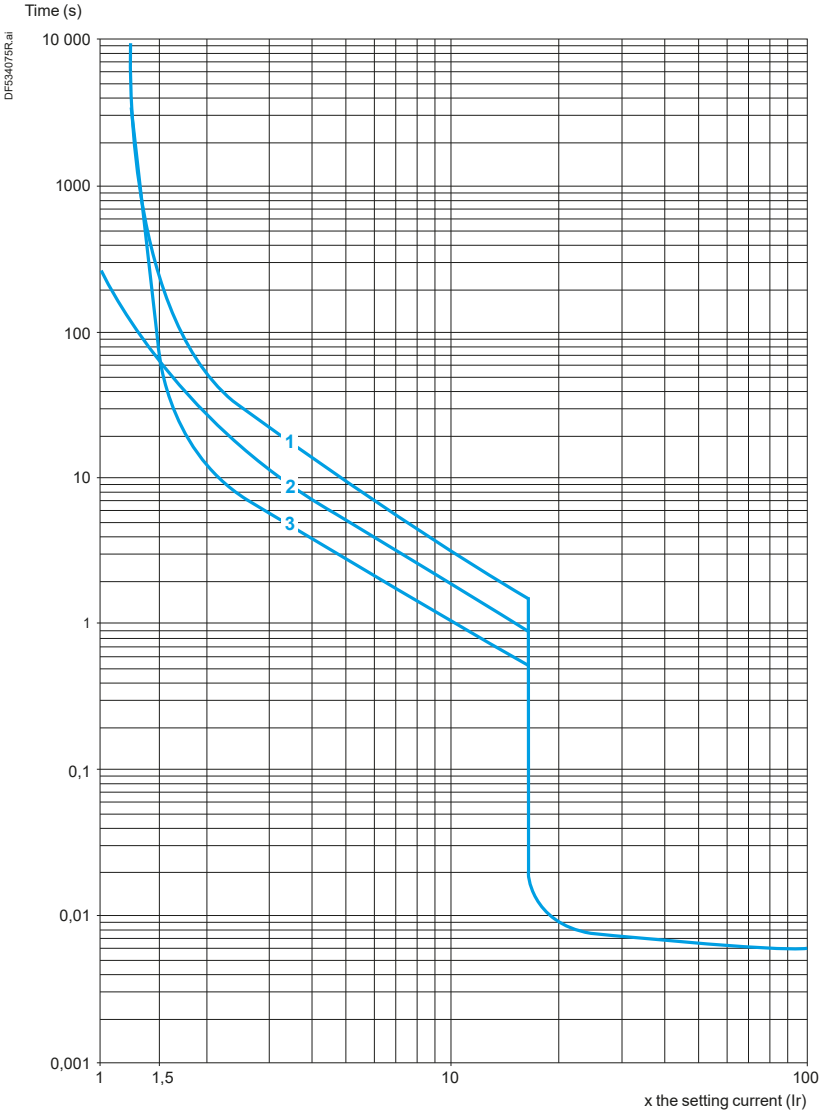

1 3 poles from cold state
2 2 poles from cold state
3 3 poles from hot state

Ref.
Motor circuit breakers

Curves

Current limitation on short-circuit for GV2ME, GV2RT and GV2P (3-phase 400/415 V)

Dynamic stress

I peak = f (prospective Isc) at 1.05 Ue = 435 V

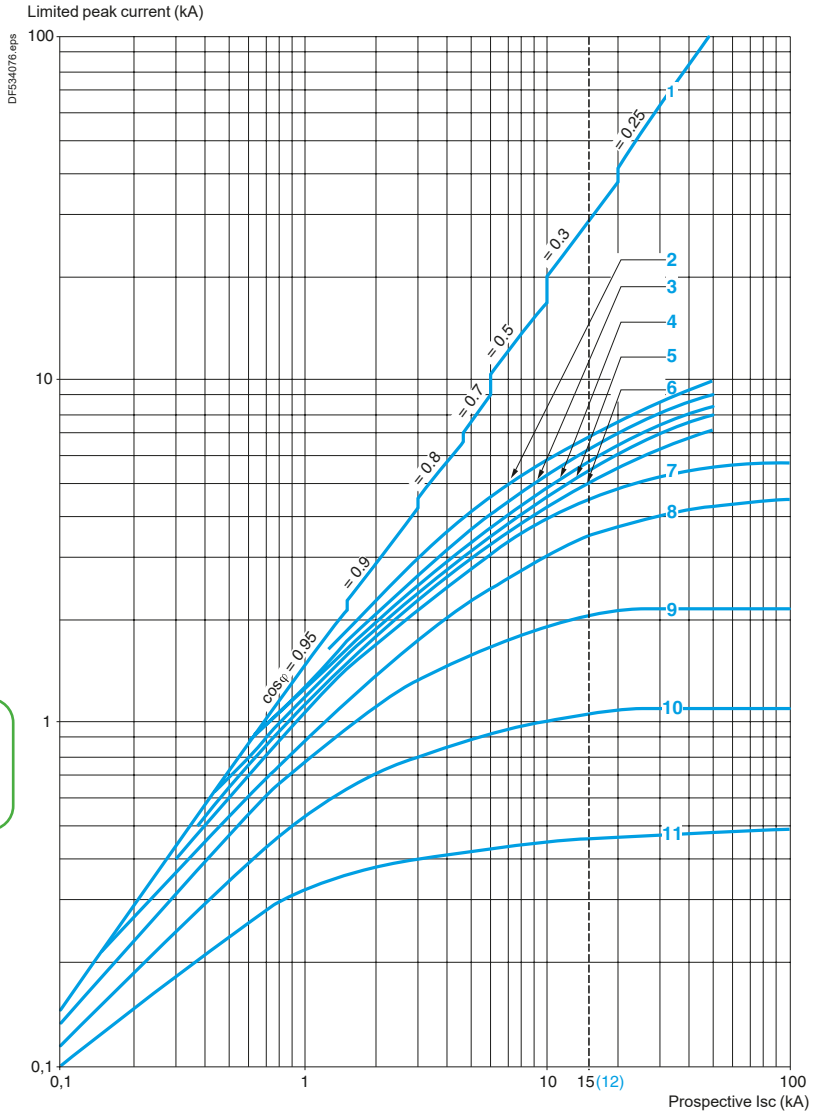

1 Maximum peak current
2 24 - 32 A
3 20 - 25 A
4 17 - 23 A
5 13 - 18 A
6 9 - 14 A
7 6 - 10 A
8 4 - 6.3 A
9 2.5 - 4 A
10 1.6 - 2.5 A
11 1 - 1.6 A
12 Limit of rated ultimate breaking capacity on short-circuit of GV2ME (14, 18, 23 and 25 A ratings)

Ref.
Motor circuit breakers

Curves

Thermal limit on short-circuit for GV2ME and GV2RT

Thermal limit in kA²s in the magnetic operating zone

Sum of I²dt = f (prospective Isc) at 1.05 Ue = 435 V

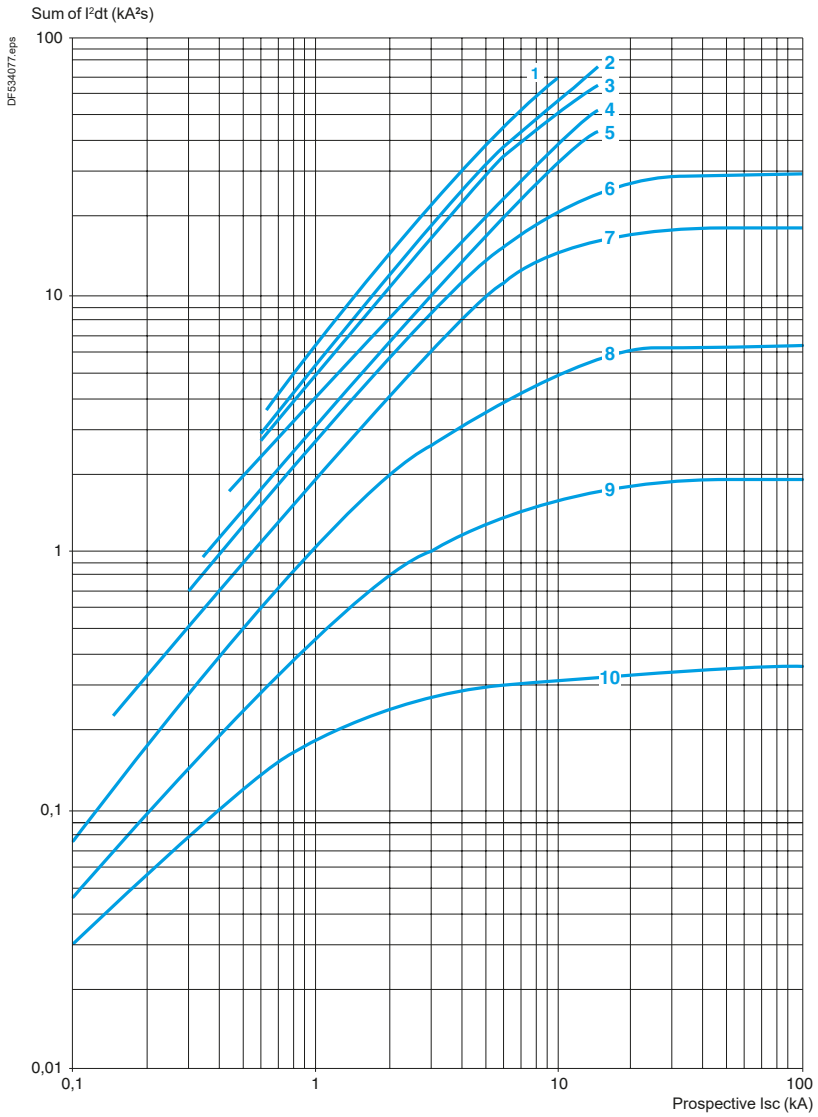

1 24 - 32 A
2 20 - 25 A
3 17 - 23 A
4 13 - 18 A
5 9 - 14 A
6 6 - 10 A
7 4 - 6.3 A
8 2.5 - 4 A
9 1.6 - 2.5 A
10 1 - 1.6 A

Ref.
Motor circuit breakers

References:
pages B6/14 to B6/18
Characteristics:
pages B6/72 to B6/76
Dimensions:
pages B6/93 to B6/99

Curves

Thermal limit on short-circuit for GV2P

Thermal limit in kA²s in the magnetic operating zone

Sum of I²dt = f (prospective Isc) at 1.05 Ue = 435 V

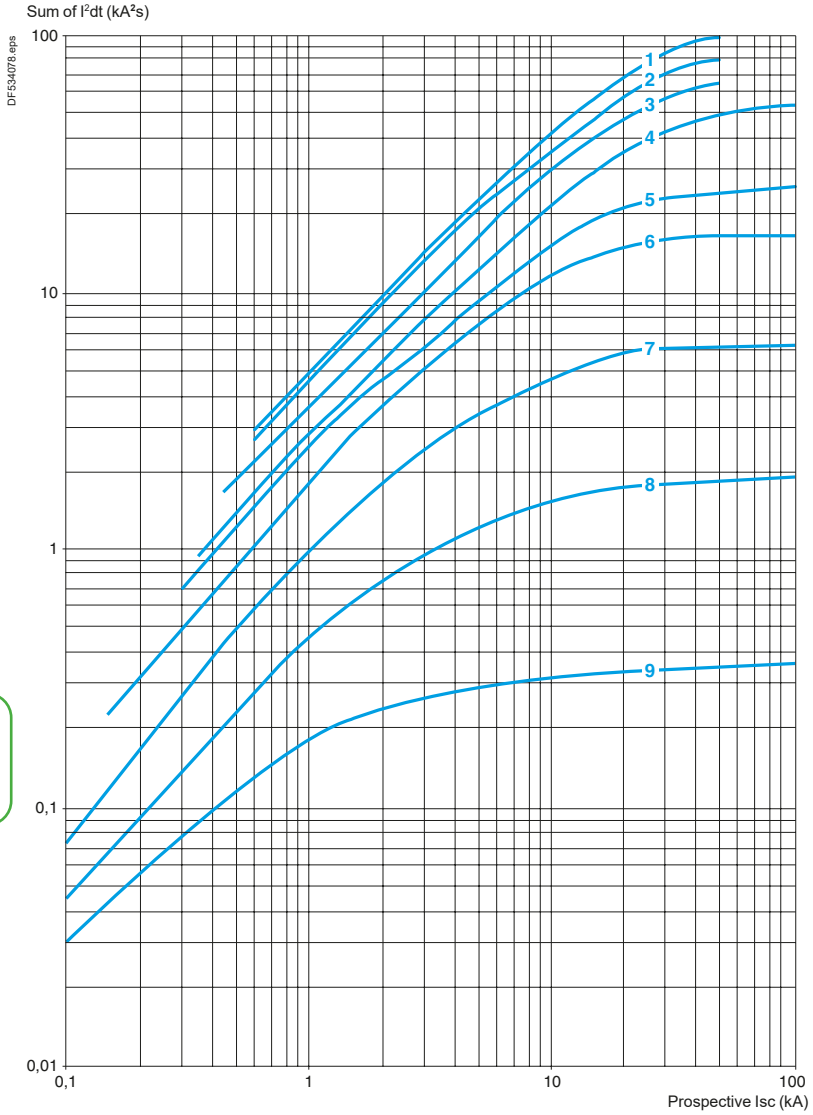

1 20 - 25 A, 24 - 32 A
2 17 - 23 A
3 13 - 18 A
4 9 - 14 A
5 6 - 10 A
6 4 - 6.3 A
7 2.5 - 4 A
8 1.6 - 2.5 A
9 1 - 1.6 A

Ref.
Motor circuit breakers

Characteristics

Characteristics of GV2 electric trips

Type of trip			GVAU●●● MN undervoltage trip	GVAX●●● MN undervoltage trip for GV2ME - safety device for dangerous machines	GVAS●●● MX shunt trip
Rated insulation voltage (Ui)	Conforming to IEC 60947-1	**V**	690	500	690
	Conforming to UL 60947-4-1, CSA C22.2 n° 60947-4-1	**V**	600	-	600
Operational voltage (Ue)	Conforming to IEC 60947-1	**V**	0.85...1.1 Uc	0.85...1.1 Uc	0.7...1.1 Uc
Drop-out voltage		**V**	0.7...0.35 Uc	0.7...0.35 Uc	0.75...0.2 Uc
Inrush consumption	~ ⎓	**VA**	12	12	14
Sealed consumption	~ ⎓	**VA**	3.5	3.5	5
Operating time	Conforming to IEC 60947-1	**ms**	From the moment the voltage reaches its operational value until opening of the circuit breaker. 10...15		
On-load factor			100 %		
Cabling (screw clamp connection)	Number of conductors		2 or 4		
	Solid cable	**mm²**	1...2.5		
	Flexible cable without cable end	**mm² AWG**	0.75...2.5		
	Flexible cable with cable end	**mm²**	0.75...2.5		
Tightening torque		**N.m**	1.4 max		
Mechanical durability (C.O.: Close - Open)		**C.O.**	30000 (GV2ME and GV2P)		

Ref.
Motor circuit breakers

References:
page B6/21

Dimensions:
pages B6/90 and B6/93

Characteristics

Type of contacts			Instantaneous auxiliary GVAN, GVAD							Fault signalling GVAD, GVAM11 (1)				Instantaneous auxiliary GVAE			
Rated insulation voltage (Ui) (associated insulation coordination)	Conforming to IEC 60947-1	V	690							690				250 (690 in relation to main circuit)			
	Conforming to UL 60947-4-1, CSA C22.2 n° 60947-4-1	V	600							300				300			
Conventional thermal current (Ith)	Conforming to IEC 60947-5-1	A	6							2.5				2.5			
	Conforming to UL 60947-5-1, CSA C22.2 n° 60947-5-1	A	5							1				1			
Mechanical durability (C.O.: Close - Open)		C.O.	100 000							1000				100 000			
Operational power and current conforming to IEC 60947-5-1. a.c. operation			AC-15/100 000 C.O.							AC-14/1000 C.O.				AC-15/100 000 C.O.			
	Rated operational voltage (Ue)	V	**48**	**110 127**	**230 240**	**380 415**	**440**	**500**	**690**	**24**	**48**	**110 127**	**230 240**	**24**	**48**	**110 127**	**230 240**
Operation	Operational power, normal conditions	VA	300	500	720	850	650	500	414	36	48	72	72	48	60	120	120
	Occasional breaking and making capacities, abnormal conditions	kVA	3	7	13	15	13	12	9	0.22	0.3	0.45	0.45	0.48	0.6	1.27	2.4
	Rated operational current (Ie)	A	6	4.5	3.3	2.2	1.5	1	0.6	1.5	1	0.5	0.3	2	1.25	1	0.5
Operational power and current conforming to IEC 60947-5-1. d.c.			DC-13/100 000 C.O.							DC-13/1000 C.O.				DC-13/100 000 C.O.			
	Rated operational voltage (Ue)	V	**24**	**48**	**60**	**110**	**240** (2)	**–**	**–**	**24**	**48**	**60**	**–**	**24**	**48**	**60**	**–**
Operation	Operational power, normal conditions	W	140	240	180	140	120	–	–	24	15	9	–	24	15	9	–
	Occasional breaking and making capacities, abnormal conditions	W	240	360	240	210	180	–	–	100	50	50	–	100	50	50	–
	Rated operational current (Ie)	A	6	5	3	1.3	0.5	–	–	1	0.3	0.15	–	1	0.3	0.15	–
Low power switching reliability of contact			**GVAE**: Number of failures for "n" million operating cycles (17 V-5 mA): = 10^{-6}														
Minimum operational conditions		V	17														
		mA	5														
Short-circuit protection			By **GB2CB●●** circuit breaker (rating according to operational current for Ue ⩽ 415 V) or by gG fuse 10 A max											**GB2CB06** or gG fuse 10 A max			
Cabling, screw clamp terminals	Number of conductors		**1**			**2**											
	Solid cable	mm²	1…2.5			1…2.5											
	Flexible cable without cable end	mm²	0.75…2.5			0.75…2.5											
	Flexible cable with cable end	mm²	0.75…1.5			0.75…1.5											
	Tightening torque	N.m	1.4 max			1.4 max											
Cabling, spring terminal connections			**GVAN** only														
	Flexible cable without cable end	mm²	0.75…2.5			0.75…2.5				–				0.75…1.5			

Operation of instantaneous auxiliary contacts

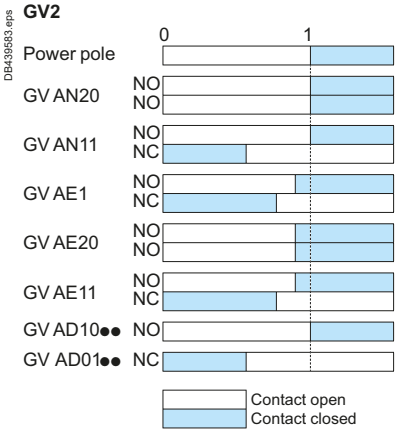

Operation of fault signalling contacts

GVAM11
Change of state following tripping on short-circuit.

GVAD10●● and **GVAD01●●**
Change of state following tripping on short-circuit, overload or undervoltage.

(1) For application example of fault signalling contact and short-circuit signalling contact.
*(2) Add an RC circuit type **LA4D** to the load terminals.*

References: page B6/21
Dimensions: pages B6/90 and B6/93

Characteristics

Characteristics of 3-pole busbars GV2G●●●

			GV2G●●●
Rated insulation voltage (Ui)	Conforming to IEC 60947-1	**V**	690
Conventional thermal current (Ith)	Conforming to IEC 60439-1	**A**	63
Rated operational current (Ie)		**A**	63
Permissible peak current (I peak)		**kA**	11
Permissible thermal limit (I^2t)		**kA^2s**	104
Degree of protection	Conforming to IEC 60529		IP 20
Terminal block			Yes

Characteristics of terminal blocks GV2G05 and GV1G09 (for GV2ME and GV2P)

Rated insulation voltage (Ui)	Conforming to IEC 60947-1	**V**	690	
Conventional thermal current (Ith)	Conforming to IEC 60439-1	**A**	63	
Rated operational current (Ie)		**A**	63	115
Degree of protection	Conforming to IEC 60529		IP 20	
Connection	Solid cable	**mm^2**	1 x 1.5 to 25 or 2 x 1.5 to 6	
	Flexible cable without cable end	**mm^2**	1 x 1.5 to 16 or 2 x 1.5 to 4	
	Flexible cable with cable end	**mm^2**	1 x 1.5 to 16 or 2 x 1.5 to 4	
	Flexible or solid cable AWG		1 AWG 4	
Tightening torque	Connector	**N.m**	2.2	
	Screw clamp terminals	**N.m**	1.7	

Characteristics of current limiters (GV2ME and GV2P)

Type			**GV1L3**		**LA9LB920**	
Rated insulation voltage (Ui)	Conforming to IEC 60947-1	**V**	690		690	
Conventional thermal current (Ith)	Conforming to IEC 60947-1	**A**	63		63	
Rated operational current (Ie)		**A**	32		32	
Operating threshold	rms current	**A**	1500 (non adjustable threshold)		1000 (non adjustable threshold)	
Connection			**1 conductor**	**2 conductors**	**1 conductor**	**2 conductors**
	Solid cable	**mm^2**	1.5…25	1.5…10	1.5…25	1.5…10
	Flexible cable without cable end	**mm^2**	1.5…25	2.5…10	1.5…25	1.5…10
	Flexible cable with cable end	**mm^2**	1.5…16	1.5… 4	1.5…16	1.5… 4
Tightening torque		**N.m**	2.2			

Ref.
Motor circuit breakers

References:
page B6/21

Dimensions:
page B6/97

Dimensions and mounting

GV2L

Dimensions

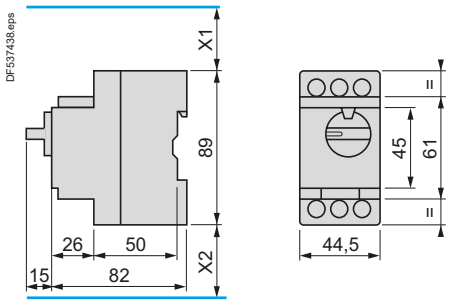

X1 Electrical clearance = 40 mm for Ue ⩽ 415 V, or 80 mm for Ue = 440 V, or 120 mm for Ue = 500 and 690 V.
X2 = 40 mm.

GVAD, AM, AN, AU, AS

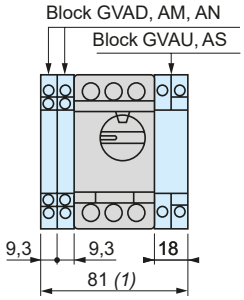

(1) Maximum.

GV2AK00

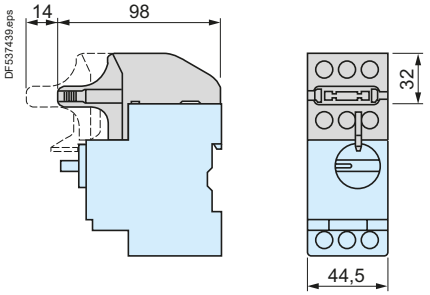

Mounting

On rail AM1DE200, AM1ED200 (35 x 15)

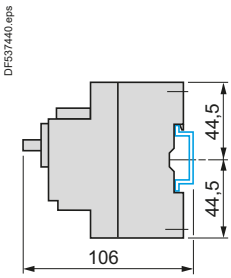

Panel mounted

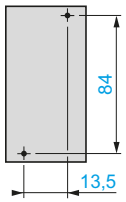

On pre-slotted mounting plate AM1PA

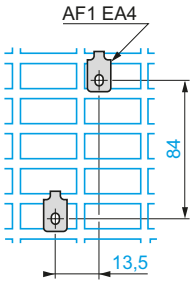

Adapter plate GK2AF01

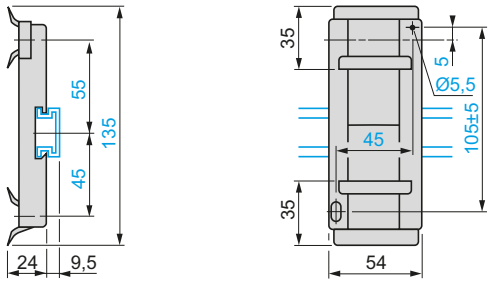

7.5 mm height compensation plate GV1F03



GV2LE

Dimensions

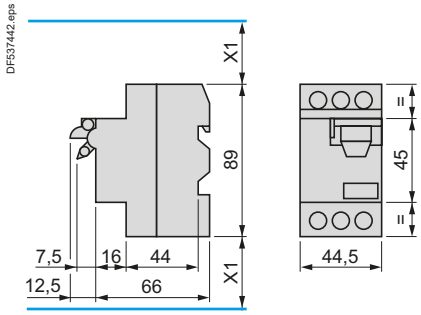

X1 Electrical clearance = 40 mm for Ue ⩽ 690 V.

GVAD, AM, AN, AU, AS

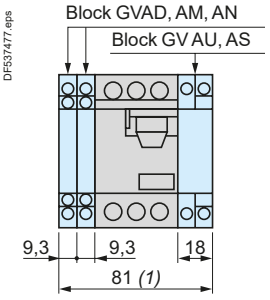

(1) Maximum.

GVAE

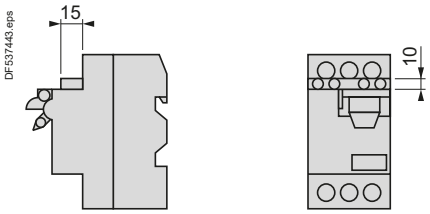

Mounting

On 35 mm ⎓ rail

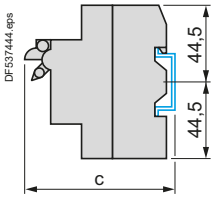

c = 80 on AM1DP200 (35 x 7.5) and 88 on AM1DE200, ED200 (35 x15)

On panel with adapter plate GV2AF02

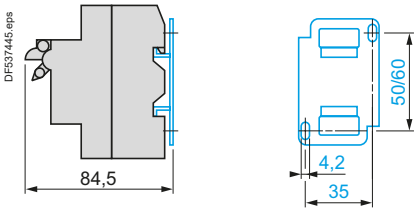

On pre-slotted plate AM1PA

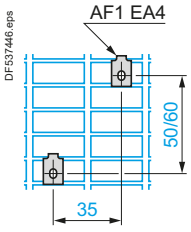

On rails DZ5MB201

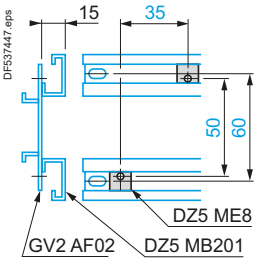

References:
pages B6/12 to B6/13
Characteristics:
pages B6/72 to B6/76
Curves:
pages B6/77 to B6/86

Mounting

Mounting of external operator GV2APN01, GV2APN02 or GV2APN04 for motor circuit breakers GV2L

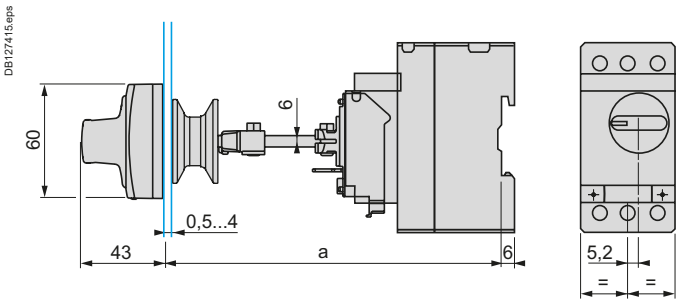

Door cut-out

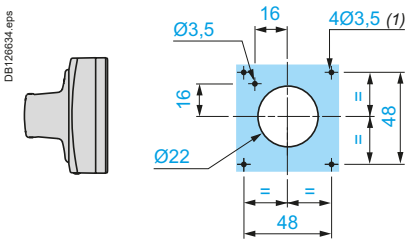

(1) For IP65 only.

Mounting of external operator GVAPH02 for motor circuit breakers GV2L

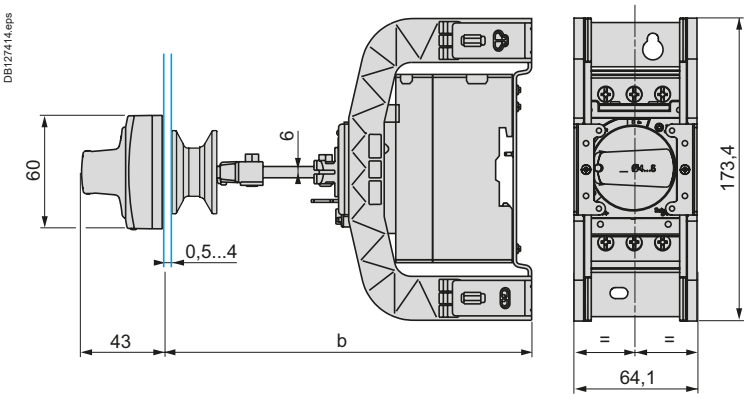

Door cut-out

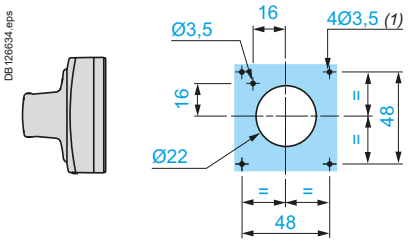

(1) For IP65 only.

	a		b	
	Mini	Maxi	Mini	Maxi
GV2APN●●	140	250		
GV2APN●● + GVAPH02			151	250
GV2APN●● + GVAPK11	250	434	-	-
GV2APN●● + GVAPH02 + GVAPK11	-	-	250	445

Mounting of external operator GV2AP03 for GV2LE

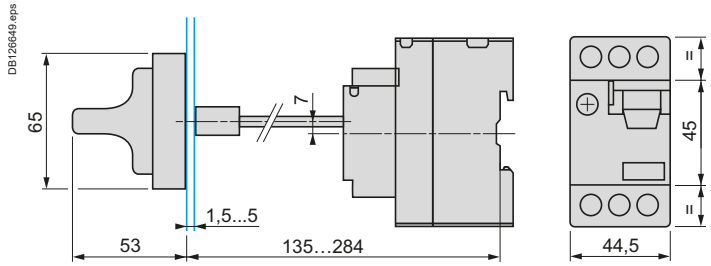

Door cut-out

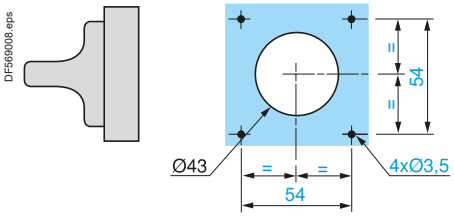

References:
page B6/24

Dimensions and mounting

GV2LE

Sets of busbars GV2G445, GV2G454, GV2G472, with terminal block GV2G05

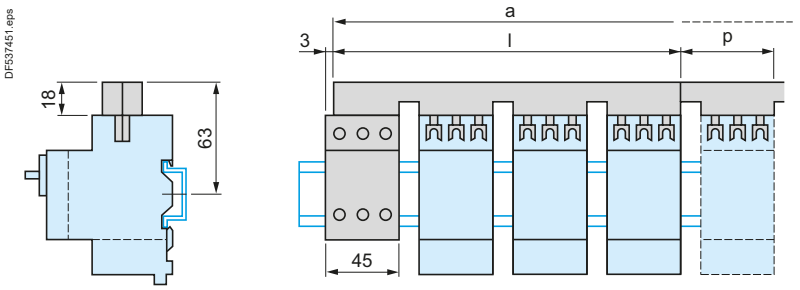

	l	p
GV2G445 (4 x 45 mm)	179	45
GV2G454 (4 x 54 mm)	206	54
GV2G472 (4 x 72 mm)	260	72

	a			
Number of tap-offs	**5**	**6**	**7**	**8**
GV2G445	224	269	314	359
GV2G454	260	314	368	422
GV2G472	332	404	476	548

Sets of busbars GV2LE

Sets of busbars GV2G●●● with term. block GV1G09

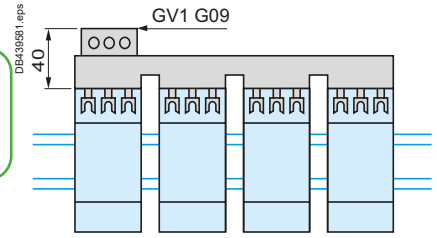

Sets of busbars GV2G245, GV2G254, GV2GR272

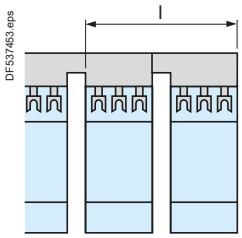

	l
GV2G245 (2 x 45 mm)	89
GV2G254 (2 x 54 mm)	98
GV2G272 (2 x 72 mm)	116

Set of busbars GV2G554

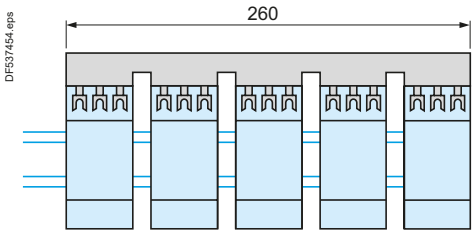

Sets of busbars GV2G345 and GV2G354

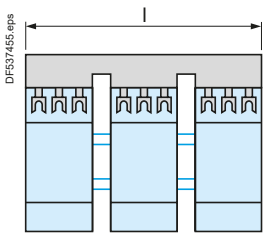

	l
GV2G345 (3 x 45 mm)	134
GV2G354 (3 x 54 mm)	152

Ref.
Motor circuit breakers

Dimensions and mounting

Dimensions

GV2ME

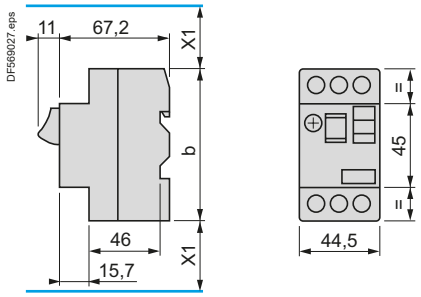

	b
GV2ME●●	89
GV2ME●●3	101

(1) Maximum.
X1 Electrical clearance = 40 mm for Ue ≤ 690 V

GVAX

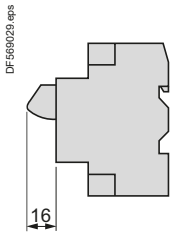

GVAD, AM, AN, AU, AS, AX

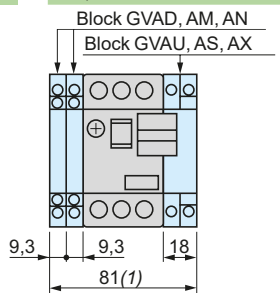

GVAE

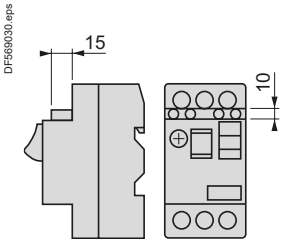

GV2P

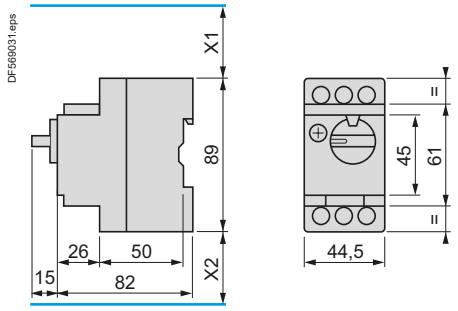

GVAD, AM, AN, AU, AS

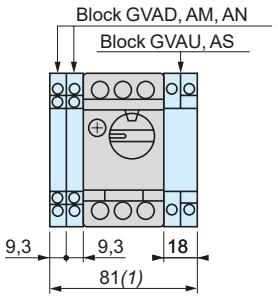

GV2AK00

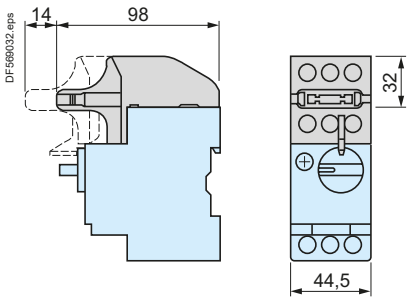

(1) Maximum.
X1 Electrical clearance = 40 mm for Ue ≤ 415 V, or 80 mm for Ue = 440 V, or 120 mm for Ue = 500 and 690 V
X2 = 40 mm

GV2GH7

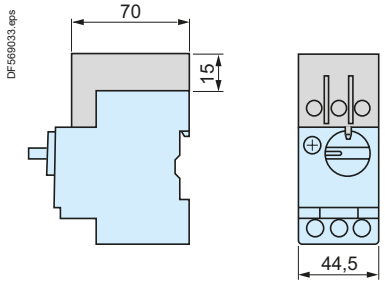

References:
pages B6/14 to B6/17
Characteristics:
pages B6/72 to B6/76
Curves:
pages B6/83 to B6/86

Dimensions and mounting

Mounting

GV2ME

On 35 mm ⊔ rail

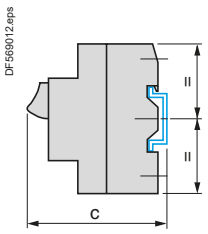

On panel with adapter plate GV2AF02

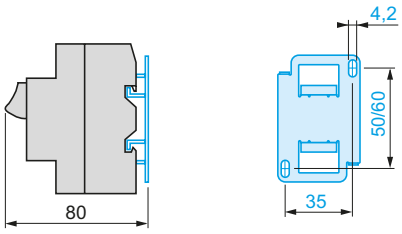

On pre-slotted plate AM1PA

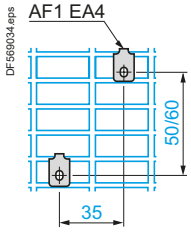

On rails DZ5MB201

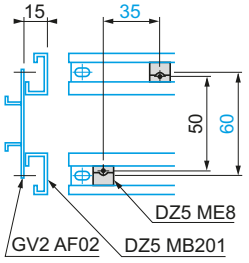

c = 78.5 on AM1 DP200 (35 x 7.5)
c = 86 on AM1 DE200, ED200 (35 x 15)

GV2P

On rail AM1DE200, ED200 (35 x 15)

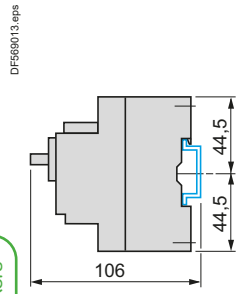

Panel mounted

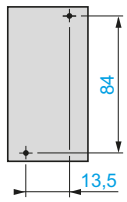

On pre-slotted plate AM1PA

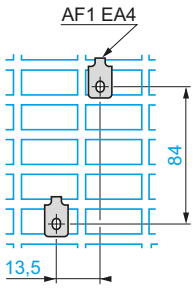

Adapter plate GK2AF01

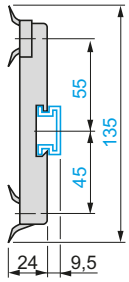

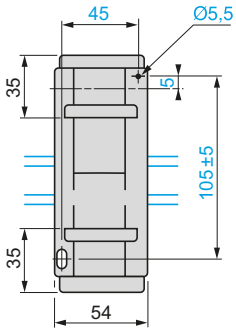

Dimensions

GV2AF01

Combination GV2ME + k contactor

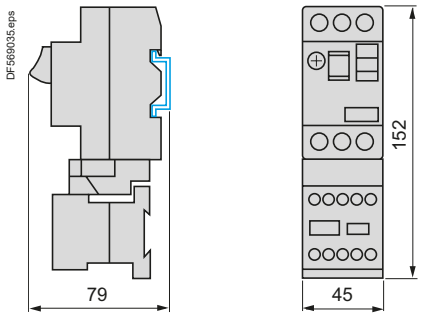

GV2AF3

Combination GV2ME + d contactor

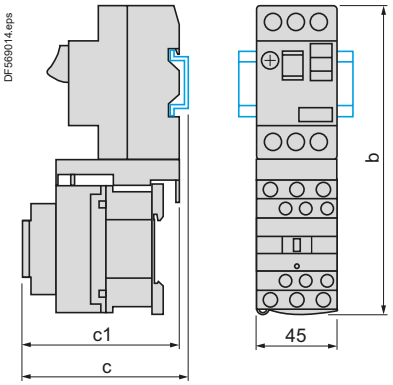

Combination GV2P + d contactor

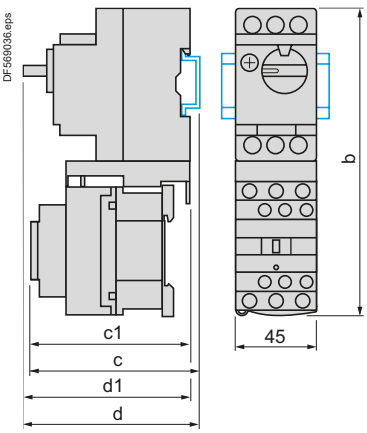

GV2ME +	LC1D09 …D18	LC1D25 and D32
b	176.4	186.8
c1	94.1	100.4
c	99.6	105.9

GV2P +	LC1D09 …D18	LC1D25 and D32
b	176.4	186.8
c1	100.1	106.4
c	105.6	111.9
d1	95	95
d	100.5	100.5

References:
pages B6/14 to B6/17

Characteristics:
pages B6/72 to B6/76

Curves:
pages B6/83 to B6/86

Dimensions

GV2AF4 + LAD311

Combination GV2ME + d contactor

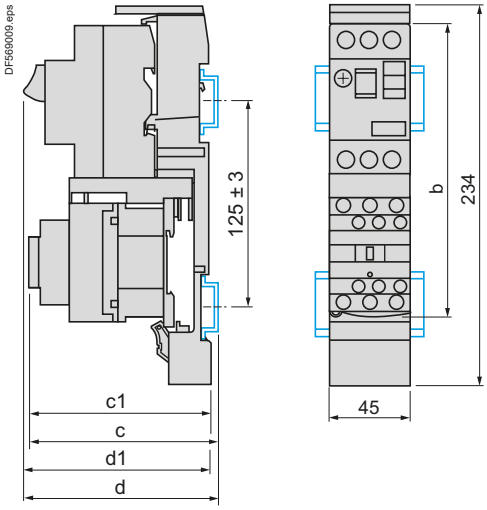

GV2ME +	LC1D09…D18	LC1D25 and D32
b	176.4	186.8
c1	130.1	136.4
c	135.6	141.9
d1	107	107
d	112.5	112.5

GV2ME + GV1L3 (current limiter)

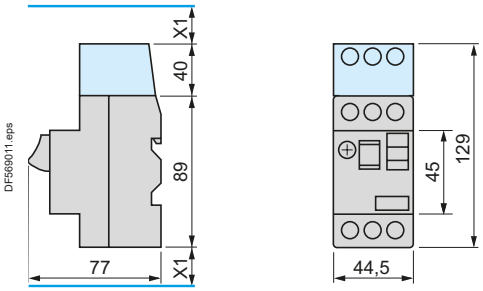

X1 = 10 mm for Ue = 230 V
or 30 mm for 230 V < Ue ≤ 690 V

7.5 mm height compensation plate GV1F03

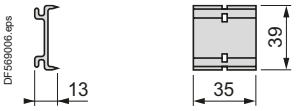

Ref.
Motor circuit breakers

Dimensions and mounting

Mounting

Mounting of external operator GV2APN01, GV2APN02 or GV2APN04 for motor circuit breakers GV2P

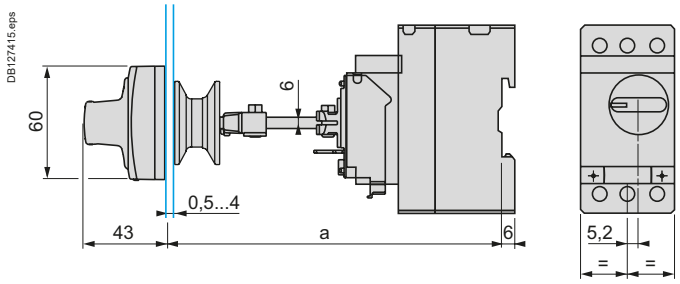

Door cut-out

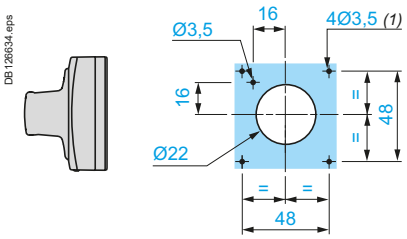

(1) For IP65 only.

Mounting of external operator GVAPH02 for motor circuit breakers GV2P

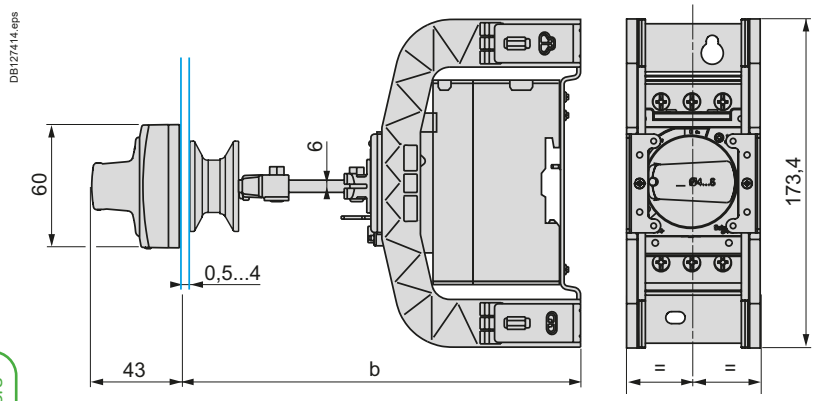

Door cut-out

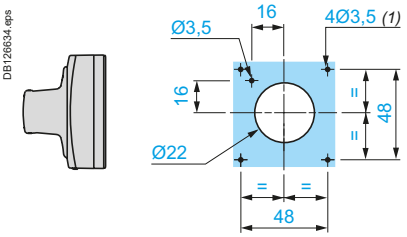

(1) For IP65 only.

	a		b	
	Mini	Maxi	Mini	Maxi
GV2APN●●	140	250		
GV2APN●● + GVAPH02			151	250
GV2APN●● + GVAPK11	250	434	-	-
GV2APN●● + GVAPH02 + GVAPK11	-	-	250	445

Ref.
Motor circuit breakers

References:
page B6/24

Dimensions and mounting

GV2ME, GV2P

Sets of busbars GV2G445, GV2G454, GV2G472, with terminal block GV2G05

DF569037.eps

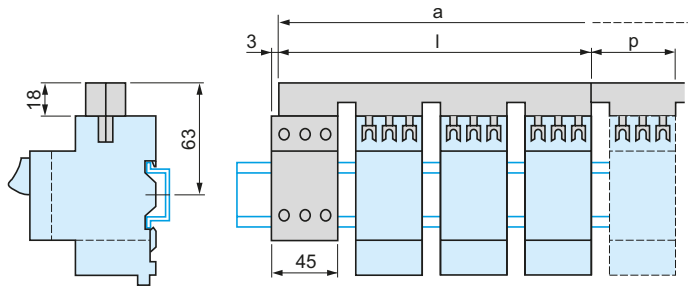

	l	p
GV2G445 (4 x 45 mm)	179	45
GV2G454 (4 x 54 mm)	206	54
GV2G472 (4 x 72 mm)	260	72

	a			
Number of tap-offs	**5**	**6**	**7**	**8**
GV2G445	224	269	314	359
GV2G454	260	314	368	422
GV2G472	332	404	476	548

Sets of busbars GV2G●●● with terminal block GV1G09

DB439582.eps

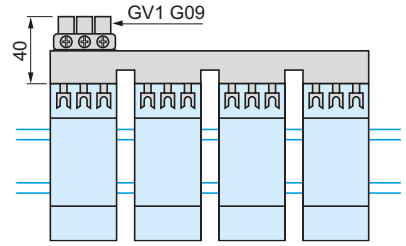

Sets of busbars GV2G245, GV2G254, GV2G272

DF569038.eps

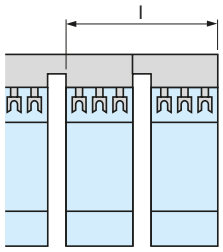

	l
GV2G245 (2 x 45 mm)	89
GV2G254 (2 x 54 mm)	98
GV2G272 (2 x 72 mm)	116

Sets of busbars GV2G554

DF569039.eps

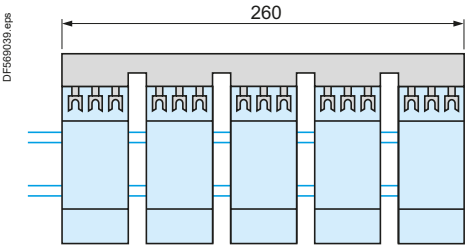

Sets of busbars GV2G345 and GV2G354

DF569040.eps

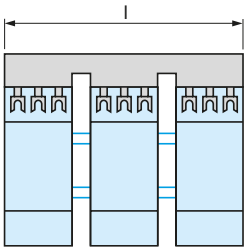

	l
GV2G345 (3 x 45 mm)	134
GV2G354 (3 x 54 mm)	152

References:
page B6/23

Dimensions and mounting

GV2RT

Dimensions

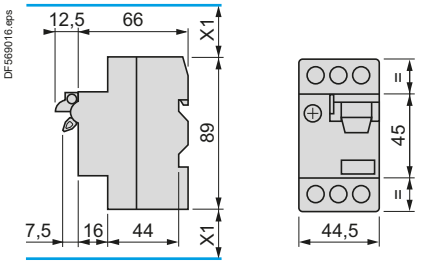

X1: Electrical clearance = 40 mm for Ue < 690 V

Mounting

Mounting of external operator GV2AP03

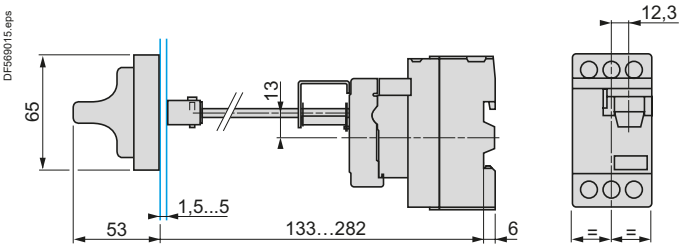

On 35 mm ⎓ rail

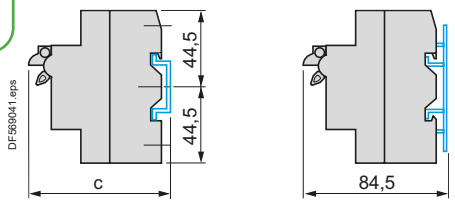

On panel with adapter plate GV2AF02

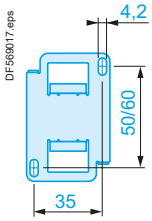

On pre-slotted plate AM1PA

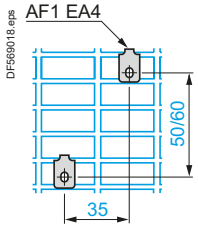

On rails DZ5MB

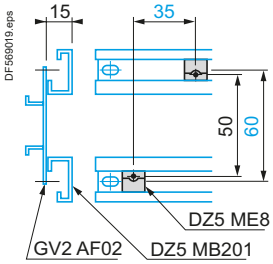

c = 80 on AM1DP200 (35 x 7.5)
c = 88 on AM1DE200, ED200 (35 x 15)

Ref.
Motor circuit breakers

Schemes

Schemes

GV2L●●

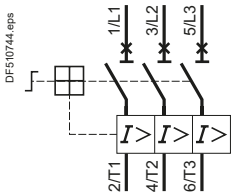

GV2LE●●

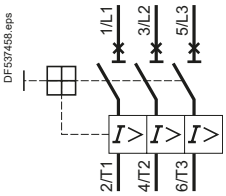

GV2P●●

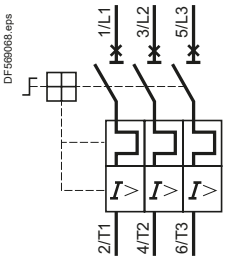

GV2ME●● and GV2RT

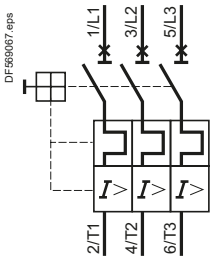

Front mounting add-on contact blocks Instantaneous auxiliary contacts

GVAE1

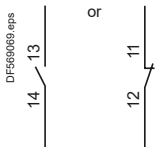

GVAE11

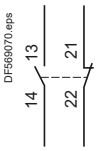

GVAE20

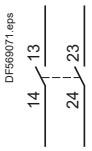

Front mounting add-on contact blocks Instantaneous auxiliary contacts and fault signalling contacts

GVAED101

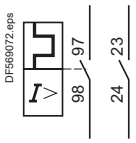

GVAED011

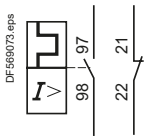

Side mounting add-on contact blocks Instantaneous auxiliary contacts and fault signalling contacts

GVAD0110

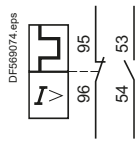

GVAD0101

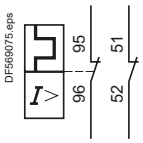

GVAD1010

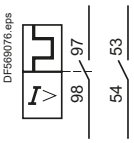

GVAD1001

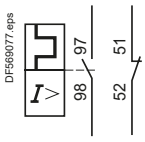

Instantaneous auxiliary contacts

GVAN11

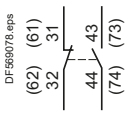

GVAN20

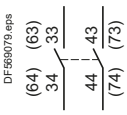

Short-circuit signalling contacts

GVAM11

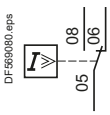

Start-Stop signalling contact blocks

GK2AX10

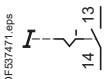

GK2AX20

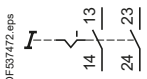

GK2AX50

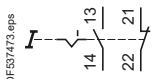

Fault signaling contact blocks

GK2AX52

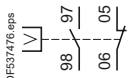

Voltage trips

GVAU●●●

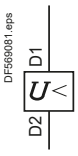

GVAS●●●

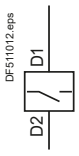

GVAX●●●

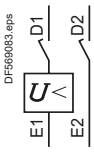

Current limiter

GV1L3

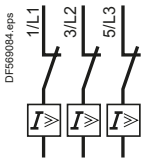

Use of fault signalling contact and short-circuit signalling contact

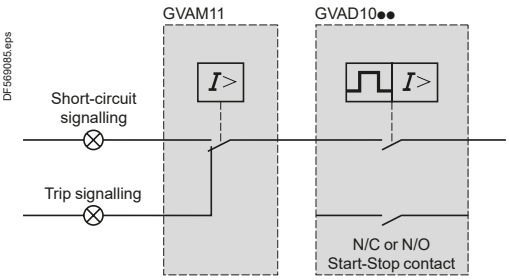

Connection of undervoltage trip for dangerous machines (conforming to INRS) on GV2ME only

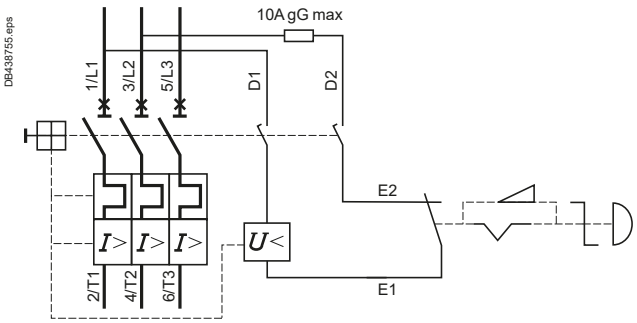

References:
pages B6/11 to B6/24

TeSys Deca
- Frame 3
5 to 45 kW



Characteristics

Environment

Circuit breaker type				GV3L	GV3P
Conforming to standards				IEC/EN 60947-4-1 IEC/EN 60947-2 UL 60947-4-1 CSA C22.2 n° 60947-4-1	IEC/EN 60947-4-1 IEC/EN 60947-2 UL 60947-4-1 CSA C22.2 n° 60947-4-1
Product certifications				CCC, EAC, BV, LROS, DNV-GL, ABS, UL (1), CSA (2), UKCA	CCC, UL, CSA, EAC, ATEX, BV, LROS, DNV-GL, ABS, UKCA
Climatic withstand				According to IACS E10	
Degree of protection (front face)	Conforming to IEC 60529	Open mounted		Against direct finger contact: IP20	
		In enclosure		-	**GV3PC01** and **GV3PC02**: IP55
Shock resistance	Conforming to IEC 60068-2-27			On: 15 gn -11 ms (On: 5 gn -11 ms for GV3L73, GV3L80, GV3P73, GV3P80) Off: 30 gn -11 ms	
Vibration resistance (3)	Conforming to IEC 60068-2-6			4 gn (5…300 Hz)	
Ambient air temperature	Storage		**°C**	-40…+80	
	Operation	Open mounted	**°C**	-20…+60 (3)	
		In enclosure	**°C**	–	-20…+40
Temperature compensation		Open mounted	**°C**	–	-20…+60
		In enclosure	**°C**	–	-20…+40
Flame resistance	Conforming to IEC 60695-2-11		**°C**	960	
Maximum operating altitude			**m**	3000	
Suitable for isolation	Conforming to IEC 60947-1 § 7-1-6			Yes	–
Resistance to mechanical impact			**J**	–	10
					IK09 (in enclosure)
Sensitivity to phase failure				Yes, conforming to IEC 60947-4-1 § 8-2-1-5-2 for GV3P	

Technical characteristics

Circuit breaker type			GV3L	GV3P
Utilisation category	Conforming to IEC 60947-2		A	–
	Conforming to IEC 60947-4-1		–	AC-3
Rated operational voltage (Ue)	Conforming to IEC 60947-2	**V**	690	
Rated insulation voltage (Ui)	Conforming to IEC 60947-2	**V**	690	
Rated voltage	Conforming to UL 60947-4-1, CSA C 22.2 n° 60947-4-1	**V**		600
Rated operational frequency	Conforming to IEC 60947-4-1 UL, CSA	**Hz**	50/60	
Rated impulse withstand voltage (U imp)	Conforming to IEC 60947-2	**kV**	6	
Total power dissipated per pole		**W**	8	
Mechanical durability (C.O.: Close, Open)		**C.O.**	50 000	
Electrical durability for AC-3 duty	415 V In	**C.O.**	50 000 (20 000 for GV3L73, GV3P73, GV3L80, GV3P80)	
Duty class (maximum operating rate)		**C.O./h**	25	
Maximum conventional rated thermal current (Ith)	Conforming to IEC 60947-4-1	**A**	–	13 to 80
Rated duty	Conforming to IEC 60947-4-1			Continuous duty
Operating threshold of magnetic trips			14 I max	

*(1) For **GV3L25** to **73**, may be followed by 6 or 1.*
*(2) For **GV3L**, **GV3L25** to **GV3L73** may be followed by 6 or 1 for use in conjunction with certified overload relay.*
(3) Leave a space of 9 mm between 2 circuit breakers: either an empty space, or side mounting add-on contact blocks. Side by side mounting is possible up to 40 °C.

Ref.
Motor circuit breakers

References: pages B6/26 and B6/27
Curves: pages B6/106 to B6/111
Dimensions: pages B6/115 and B6/116
Schemes: page B6/117

Mounting characteristics

Operating position
Without derating, in relation to normal vertical mounting plane (1)

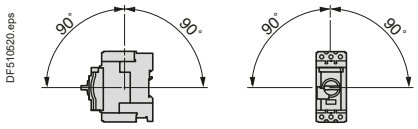

Connection characteristics

Connection to screw clamp terminals or spring terminals

Bare cables

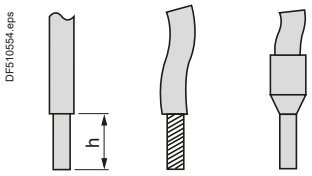

Circuit breaker type			GV3L		GV3P	
			Min.	Max.	Min.	Max.
Connection to screw clamp terminals (2) (Max. number of conductors x c.s.a.)	Solid cable	mm²	2 x 1	1 x 25 and 1 x 35	2 x 1	1 x 25 and 1 x 35
	Flexible cable without cable end	mm²	2 x 1	1 x 25 and 1 x 35	2 x 1	1 x 25 and 1 x 35
	Flexible cable with cable end	mm²	2 x 1	1 x 25 and 1 x 35	2 x 1	1 x 25 and 1 x 35
Tightening torque		N.m	5	5: 25 mm² 8: 35 mm²	5	5: 25 mm² 8: 35 mm²

Connection by bars or lugs

Bars or lugs

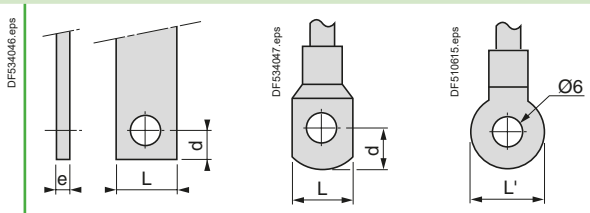

Circuit breaker type			GV3L●●6	GV3P●●6
Pitch	Without spreaders	mm	17.5	
	With spreaders	mm	–	
Bars or cables with lugs	e	mm	≤ 6	
	L	mm	≤ 13.5	
	L'	mm	≤ 16.5	
	d	mm	≤ 10	
Screws			M6	
	Tightening torque	N.m	6	
Bare cables (copper or aluminium) with connectors	Height (h)	mm	–	
	C.s.a.	mm²	–	
	Tightening torque	N.m	–	

(1) When mounting on a vertical rail, fit a stop to prevent any slippage.
*(2) For motor circuit breakers **GV3P**: BTR hexagon socket head screws, **Ever**Link® system. Require use of an insulated Allen key, in compliance with local electrical wiring regulations.*
*(3) For cross-sections 1 to 1.5 mm², the use of an **LA9D99** cable end reducer is recommended.*

References: pages B6/26 and B6/27
Curves: pages B6/106 to B6/111
Dimensions: pages B6/115 and B6/116
Schemes: page B6/117

Characteristics

Breaking capacity of GV3L

Type				GV3L25	GV3L32	GV3L40	GV3L50	GV3L65	GV3L73	GV3L80
Breaking capacity of the circuit-breaker only or of the circuit-breaker combined with a thermal overload relay	230/240 V	Icu	**kA**	100	100	100	100	100	65	65
		Ics % (1)		100	100	100	100	100	100	100
	400/415 V	Icu	**kA**	100	100	50	50	50	50	50
		Ics % (1)		100	100	100	100	100	60	60
	440 V	Icu	**kA**	50	50	50	50	50	50	50
		Ics % (1)		100	100	100	100	100	60	60
	500 V	Icu	**kA**	12	12	12	12	12	12	12
		Ics % (1)		50	50	50	50	50	50	50
	690 V	Icu	**kA**	6	6	6	6	6	6	6
		Ics % (1)		50	50	50	50	50	50	50
Associated fuses (if required) for use with circuit breaker only or circuit breaker combined with a thermal overload relay if Isc > breaking capacity	230/240 V	aM	**A**	★	★	★	★	★	★	★
		gG	**A**	★	★	★	★	★	★	★
	415 V	aM	**A**	★	★	★	★	125	125	125
		gG	**A**	★	★	★	★	160	160	160
	440 V	aM	**A**	63	80	125	125	125	125	125
		gG	**A**	80	100	160	160	160	160	160
	500 V	aM	**A**	63	63	63	63	80	80	80
		gG	**A**	80	80	80	80	100	100	100
	690 V	aM	**A**	50	50	50	50	63	63	63
		gG	**A**	63	63	63	63	80	80	80
Use of circuit breakers without fuses				Minimum cable length (in metres) limiting the maximum short-circuit current to 35 kA maximum.						
	Cable c.s.a.		**mm²**	**≤ 25**	**35**	**50**	**70**	**95**	- (2)	- (2)
	Isc (rms) 3-phase, incoming (Ue = 415 V)	50 kA	**m**	5	6	8	10	13	- (2)	- (2)
		45 kA	**m**	5	5	7	8	10	- (2)	- (2)
		40 kA	**m**	5	5	5	5	8	- (2)	- (2)
		37 kA	**m**	5	5	5	5	5	- (2)	- (2)

★ *Fuse not required: breaking capacity Icn > Isc.*
(1) As % of Icu.
(2) Please consult your Regional Sales Office.

Ref.
Motor circuit breakers

Characteristics

Breaking capacity of GV3P

Motor circuit breaker type				GV3P								
				13	18	25	32	40	50	65	73	80
Rating			A	13	18	25	32	40	50	65	73	80
Breaking capacity conforming to IEC 60947-2	230/240 V	Icu	kA	100	100	100	100	100	100	100	100	100
		Ics % (1)		100	100	100	100	100	100	100	100	100
	400/415 V	Icu	kA	100	100	100	100	50	50	50	50	50
		Ics % (1)		100	100	100	100	100	100	100	60	60
	440 V	Icu	kA	50	50	50	50	50	50	50	50	50
		Ics % (1)		100	100	100	100	100	100	100	60	60
	500 V	Icu	kA	12	12	12	12	12	12	12	12	12
		Ics % (1)		50	50	50	50	50	50	50	50	50
	690 V	Icu	kA	6	6	6	6	6	6	6	6	6
		Ics % (1)		50	50	50	50	50	50	50	50	50
Associated fuses, if required if Isc > breaking capacity Icu	230/240 V	aM	A	★	★	★	★	★	★	★	★	★
		gG	A	★	★	★	★	★	★	★	★	★
	415 V	aM	A	★	★	★	★	125	125	125	125	125
		gG	A	★	★	★	★	160	160	160	160	160
	440 V	aM	A	63	80	125	125	125	125	125	125	125
		gG	A	80	100	160	160	160	160	160	160	160
	500 V	aM	A	63	63	63	63	80	80	80	80	80
		gG	A	80	80	80	80	100	100	100	100	100
	690 V	aM	A	50	50	50	50	63	63	63	63	63
		gG	A	63	63	63	63	80	80	80	80	80

★ *Fuse not required: breaking capacity Icn > Isc.*
(1) As % of Icu.

Ref.
Motor circuit breakers

Curves

Tripping curves for GV3L combined with thermal overload relay LRD33

Average operating time at 20 °C without prior current flow

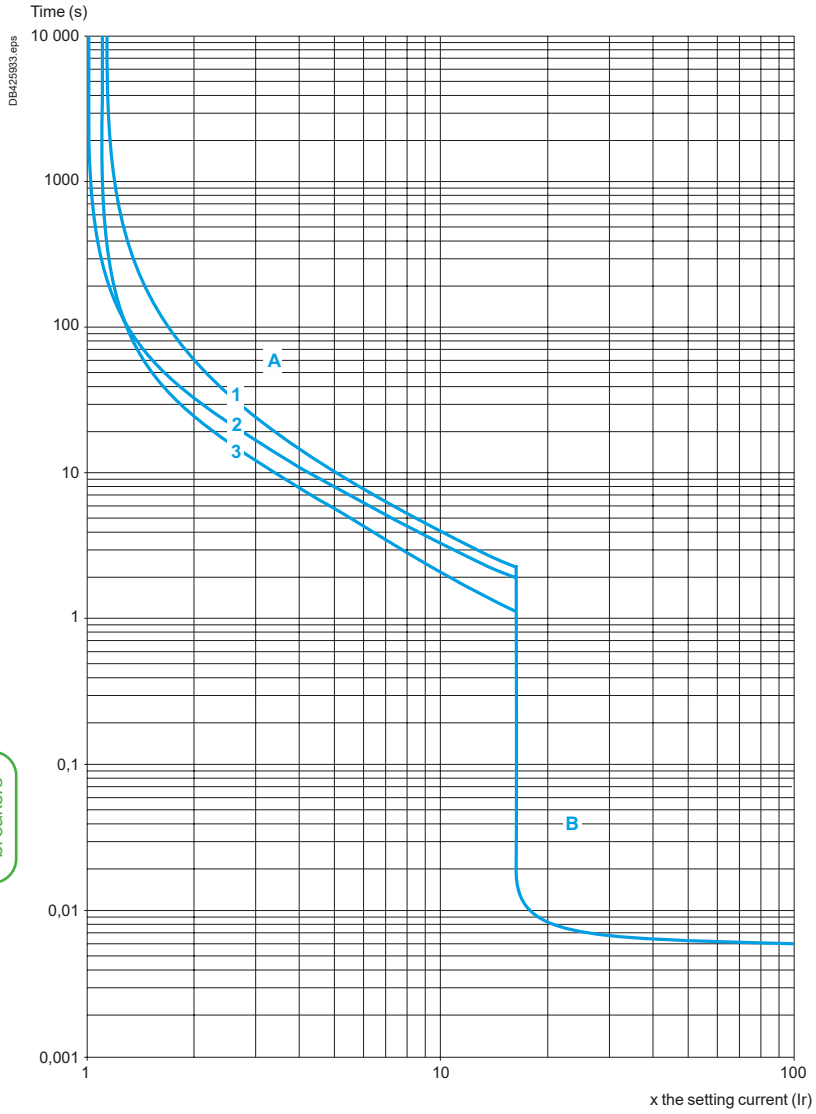

1 3 poles from cold state
2 2 poles from cold state
3 3 poles from hot state

A Thermal overload relay protection zone
B GV3L protection zone

Ref.
Motor circuit breakers

Curves

Current limitation on short-circuit for GV3L (3-phase 400/415 V)

Dynamic stress

I peak = f (prospective Isc) at 1.05 Ue = 435 V

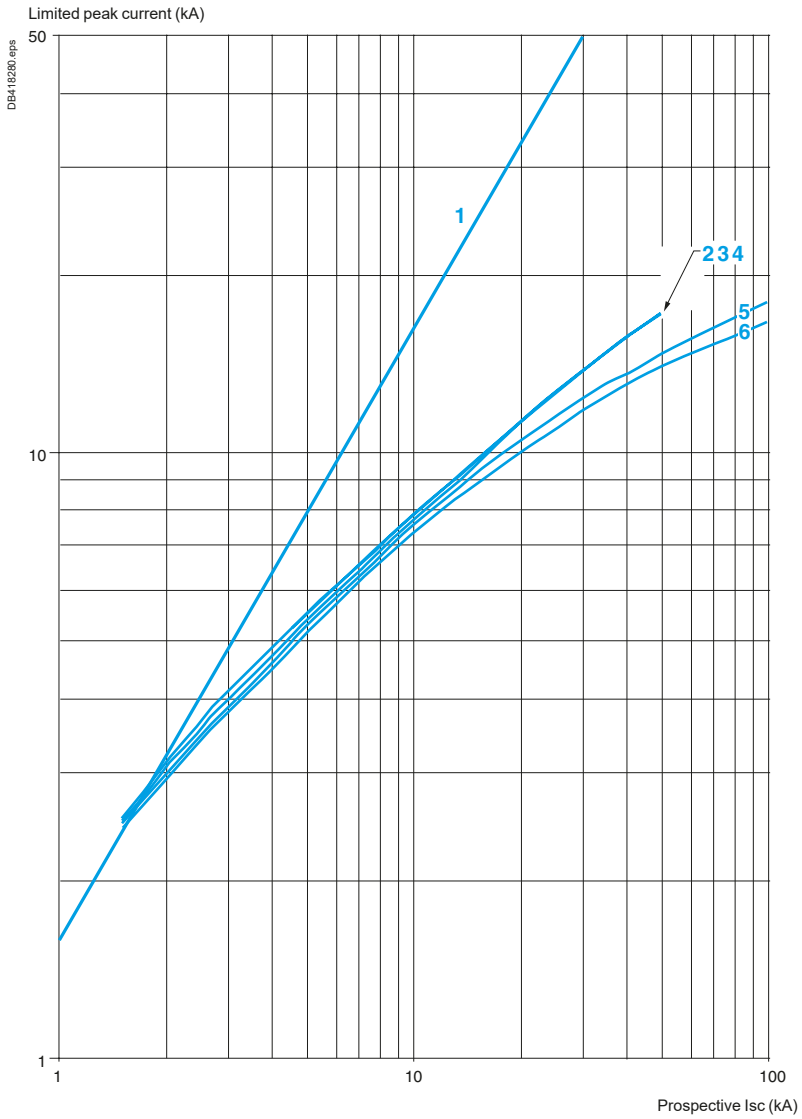

1 Maximum peak current
2 GV3L80 - GV3L73 - GV3L65
3 GV3L50
4 GV3L40
5 GV3L32
6 GV3L25

References: page B6/26
Characteristics: pages B6/102 to B6/104
Dimensions: pages B6/115 and B6/116
Schemes: page B6/117

Curves

Thermal limit on short-circuit for GV3L

Thermal limit in kA²S

Sum of I²dt = f (prospective Isc) at 1.05 Ue = 435 V

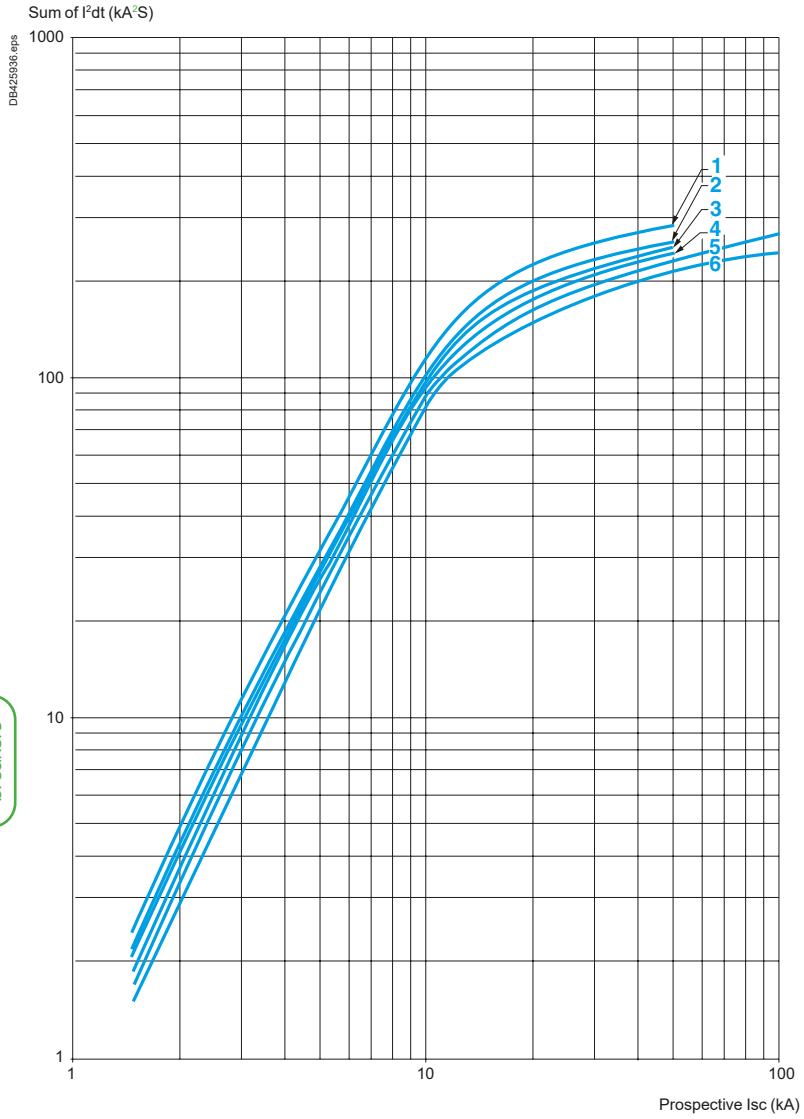

1 GV3L73 - GV3L80
2 GV3L65
3 GV3L50
4 GV3L40
5 GV3L32
6 GV3L25

Ref.
Motor circuit breakers

Life Is On Schneider Electric

Curves

Thermal-magnetic tripping curves for GV3P

Average operating times at 20 °C related to multiples of the setting current

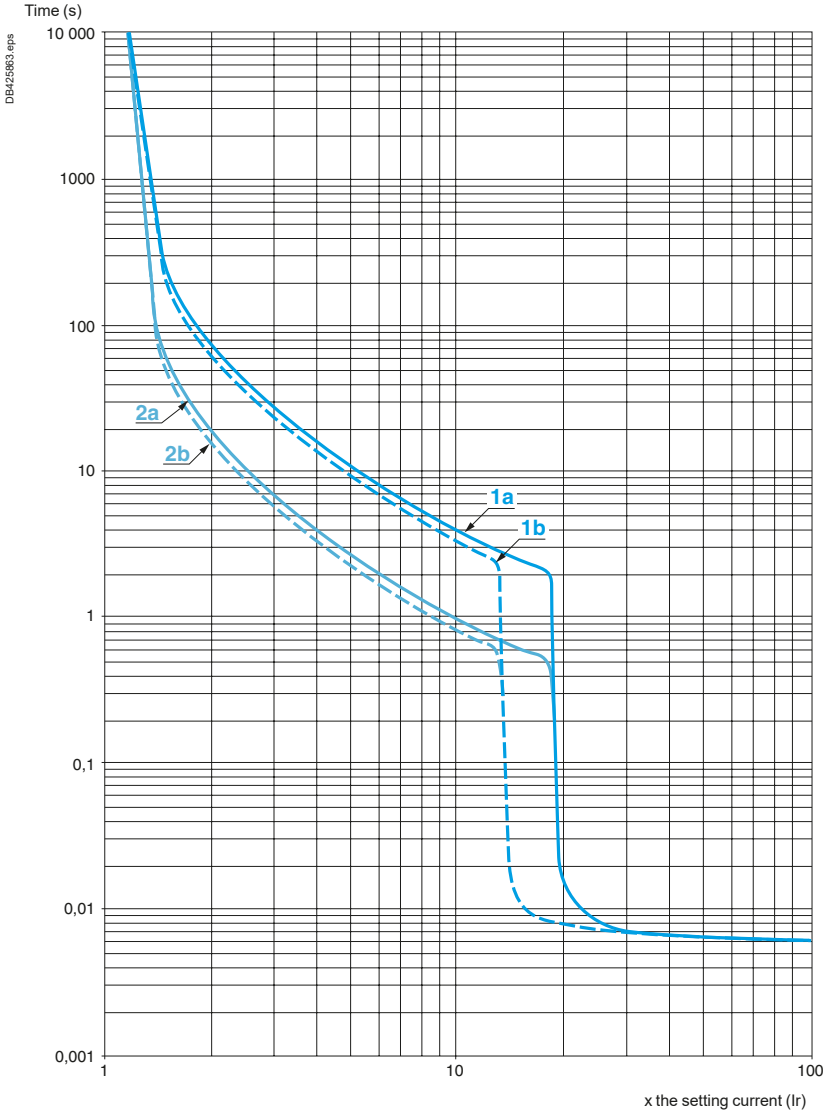

1a 3 poles from cold state (Ir mini.): GV3P
1b 3 poles from cold state (Ir maxi.): GV3P
2a 3 poles from hot state (Ir mini.): GV3P
2b 3 poles from hot state (Ir maxi.): GV3P

Ref.
Motor circuit breakers

Curves

Current limitation on short-circuit for GV3P (3-phase 400/415 V)

Dynamic stress

I peak = f (prospective Isc) at 1.05 Ue = 435 V

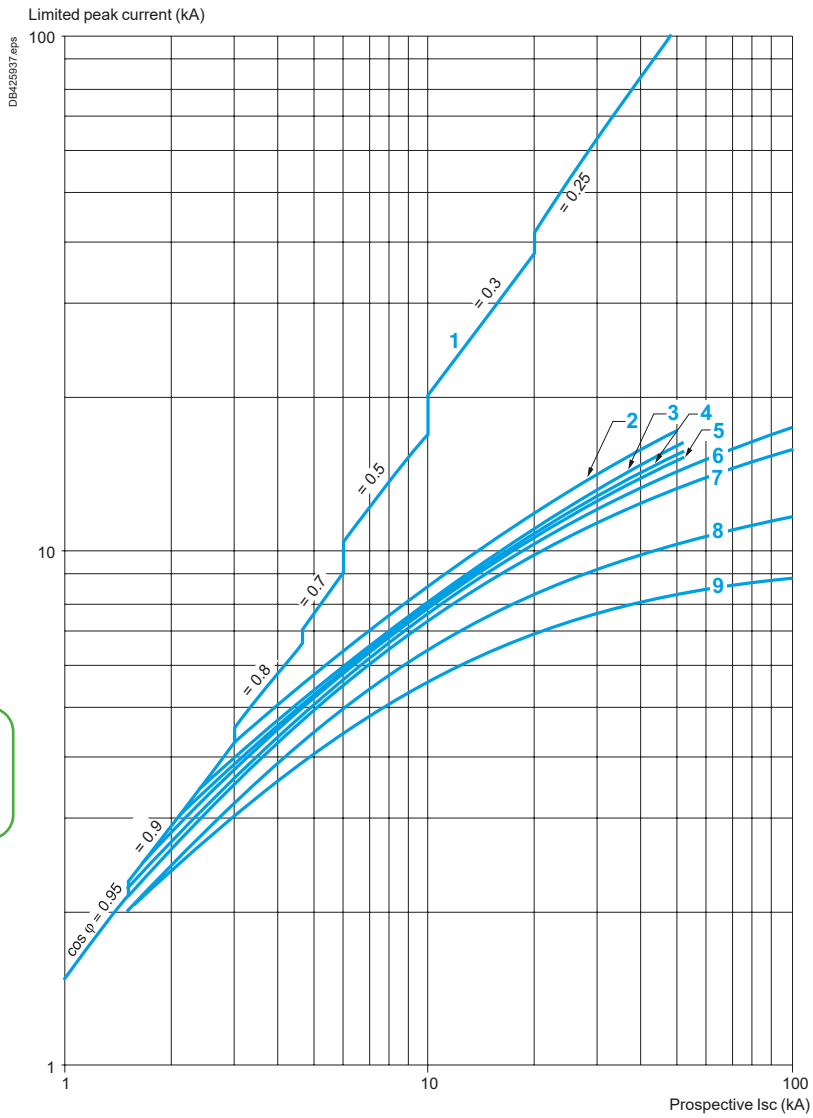

1 Maximum peak current
2 70-80 A (GV3P80); 62-73 A (GV3P73)
3 48-65 A (GV3P65)
4 37-50 A (GV3P50)
5 30-40 A (GV3P40)
6 23-32 A (GV3P32)
7 17-25 A (GV3P25)
8 12-18 A (GV3P18)
9 9-13 A (GV3P13)

Ref.
Motor circuit breakers

Curves

Maximum thermal limit on short-circuit for GV3P

Thermal limit in kA²s in the magnetic operating zone

Sum of I²dt = f (prospective Isc) at 1.05 Ue = 435 V

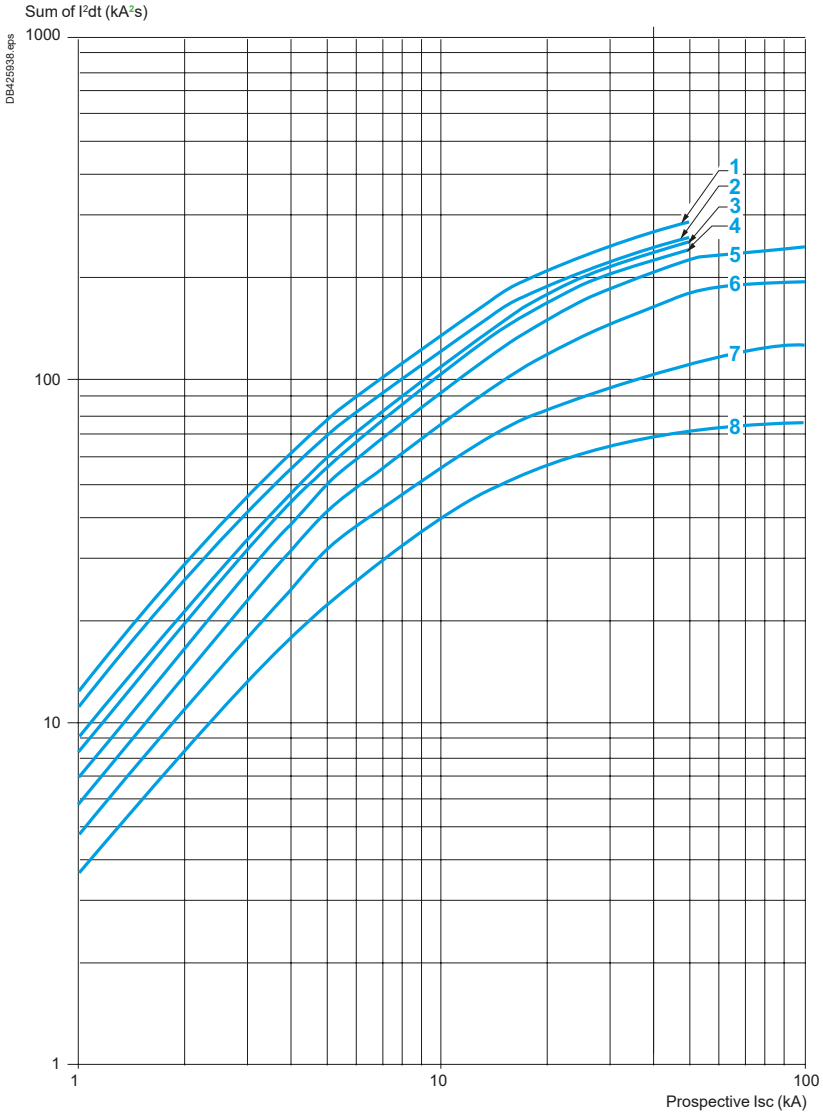

1 70-80 (GV3P80) - 62-73 (GV3P73)
2 48-65 A (GV3P65)
3 37-50 A (GV3P50)
4 30-40 A (GV3P40)
5 23-32 A (GV3P32)
6 17-25 A (GV3P25)
7 12-18 A (GV3P18)
8 9-13 A (GV3P13)

Ref.
Motor circuit breakers

Characteristics

Characteristics of GV3 electric trips

Type of trip			GVAU●●● MN undervoltage trip	GVAS●●● MX shunt trip
Rated insulation voltage (Ui)	Conforming to IEC 60947-1	**V**	690	690
	Conforming to CSA C22-2 n°14, UL 508	**V**	600	600
Operational voltage (Ue)	Conforming to IEC 60947-1	**V**	0.85...1.1 Uc	0.7...1.1 Uc
Drop-out voltage		**V**	0.7...0.35 Uc	0.75...0.2 Uc
Inrush consumption	~ ⎓	**VA**	12	14
Sealed consumption	~ ⎓	**VA**	3.5	5
Operating time	Conforming to IEC 60947-1	**ms**	From the moment the voltage reaches its operational value until opening of the circuit breaker. 10...15	
On-load factor			100 %	
Cabling (spring connection)	Number of conductors		2 or 4	
	Solid cable	**mm²**	1...2.5	
	Flexible cable without cable end	**mm² AWG**	0.75...2.5	
	Flexible cable with cable end	**mm²**	0.75...2.5	
Tightening torque		**N.m**	1.4 max	
Mechanical durability (C.O.: Close - Open)		**C.O.**	10000 (GV3P and GV3L)	

References: page B6/29
Dimensions: page B6/115
Schemes: page B6/117

Characteristics

Type of contacts			Instantaneous auxiliary GVAN, GVAD							Fault signalling GVAD, GVAM11 (1)				Instantaneous auxiliary GVAE			
Rated insulation voltage (Ui) (associated insulation coordination)	Conforming to IEC 60947-1	V	690							690				250 (690 in relation to main circuit)			
	Conforming to UL 60947-4-1, CSA C22.2 n° 60947-4-1	V	600							300				300			
Conventional thermal current (Ith)	Conforming to IEC 60947-5-1	A	6							2.5				2.5			
	Conforming to UL 60947-5-1, CSA C22.2 n° 60947-5-1	A	5							1				1			
Mechanical durability (C.O.: Close - Open)		C.O.	100 000							1000				100 000			
Operational power and current conforming to IEC 60947-5-1. a.c. operation			AC-15/100 000 C.O.							AC-14/1000 C.O.				AC-15/100 000 C.O.			
	Rated operational voltage (Ue)	V	**48**	**110 127**	**230 240**	**380 415**	**440**	**500**	**690**	**24**	**48**	**110 127**	**230 240**	**24**	**48**	**110 127**	**230 240**
Operation	Operational power, normal conditions	VA	300	500	720	850	650	500	400	36	48	72	72	48	60	120	120
	Occasional breaking and making capacities, abnormal conditions	kVA	3	7	13	15	13	12	9	0.22	0.3	0.45	0.45	0.48	0.6	1.27	2.4
	Rated operational current (Ie)	A	6	4.5	3.3	2.2	1.5	1	0.6	1.5	1	0.5	0.3	2	1.25	1	0.5
Operational power and current conforming to IEC 60947-5-1. d.c.			DC-13/100 000 C.O.							DC-13/1000 C.O.				DC-13/100 000 C.O.			
	Rated operational voltage (Ue)	V	**24**	**48**	**60**	**110**	**240** (2)	**–**	**–**	**24**	**48**	**60**	**–**	**24**	**48**	**60**	**–**
Operation	Operational power, normal conditions	W	140	240	180	140	120	–	–	24	15	9	–	24	15	9	–
	Occasional breaking and making capacities, abnormal conditions	W	240	360	240	210	180	–	–	100	50	50	–	100	50	50	–
	Rated operational current (Ie)	A	6	5	3	1.3	0.5	–	–	1	0.3	0.15	–	1	0.3	0.15	–
Low power switching reliability of contact			**GVAE**: Number of failures for “n” million operating cycles (17 V-5 mA): = 10^{-6}														
Minimum operational conditions d.c. operation		V	17														
		mA	5														
Short-circuit protection			By **GB2CB●●** circuit breaker (rating according to operational current for Ue ⩽ 415 V) or by gG fuse 10 A max											**GB2CB06** or gG fuse 10 A max			
Cabling, screw clamp terminals	Number of conductors		**1**			**2**											
	Solid cable	mm^2	1…2.5			1…2.5											
	Flexible cable without cable end	mm^2	0.75…2.5			0.75…2.5											
	Flexible cable with cable end	mm^2	0.75…1.5			0.75…1.5											
	Tightening torque	N.m	1.4 max			1.4 max											
Cabling, spring terminal connections			**GVAN** only														
	Flexible cable without cable end	mm^2	0.75…2.5			0.75…2.5				–				0.75…1.5			

Operation of instantaneous auxiliary contacts

DB439583.eps

GV3P, GV3L



Operation of fault signalling contacts

GVAM11
Change of state following tripping on short-circuit.

GVAD10●● and **GVAD01●●**
Change of state following tripping on short-circuit, overload or undervoltage.

(1) For application example of fault signalling contact and short-circuit signalling contact.
*(2) Add an RC circuit type **LA4D** to the load terminals.*

References: page B6/29
Dimensions: page B6/115
Schemes: page B6/117

Characteristics

Characteristics of 3-pole busbars GV3G●●●

			GV3G●64
Rated insulation voltage (Ui)	Conforming to IEC 60947-1	**V**	690
Conventional thermal current (Ith)	Conforming to IEC 60439-1	**A**	115
Rated operational current (Ie)		**A**	115
Permissible peak current (I peak)		**kA**	20
Permissible thermal limit (I^2t)		**kA^2s**	300
Degree of protection	Conforming to IEC 60529		IP 20
Terminal block			–

References: page B6/29
Dimensions: page B6/115

Life Is On Schneider Electric

Dimensions and mounting

GV3L, GV3P

Dimensions

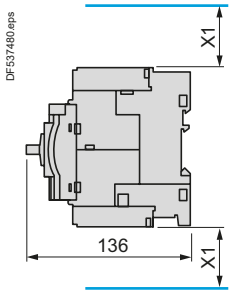

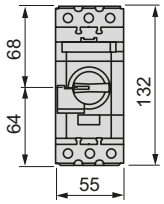

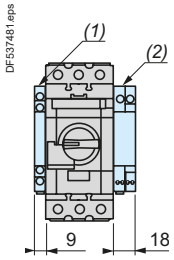

X1 = Electrical clearance (ISC max)
40 mm for Ue ⩽ 500 V, 50 mm for Ue ⩽ 690 V

*(1) Blocks **GVAN●●**, **GVAD●●** and **GVAM11**.*
*(2) Blocks **GV3AU●●** and **GV3AS●●**.*

***Note:** Leave a space of 9 mm between 2 circuit breakers: either an empty space or side-mounting add-on contact blocks.*
Side by side mounting is possible up to 40 °C.

Mounting

Mounting with contactor LC1D40A…D80A and relay LR3D313…380 (1) (2) (3)

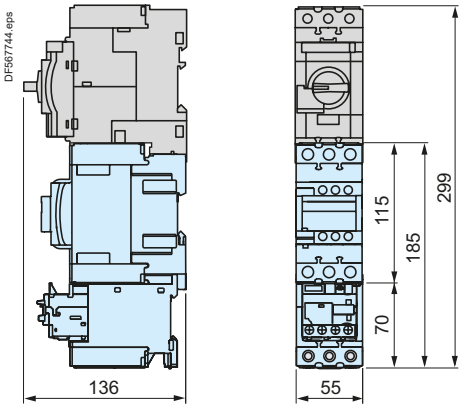

Side by side mounting with contactor LC1D40A…D73A (S-shape busbar system GV3S (1)**)**

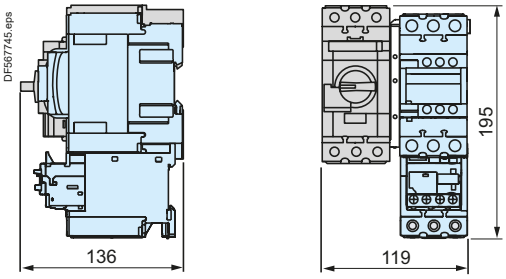

*(1) Mountings with c.b. up to **GV3L73**, **GV3P73**.*
*(2) For **GV3L80**, **GV3P80** use cable between components for dissipating heat. Consult online datasheets for values*
(3) S-shape busbar system suitable up to 73 A.

Mounting on rail AM1DE200 or AM1ED201

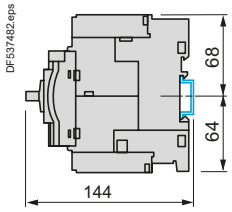

Panel mounting, using M4 screws

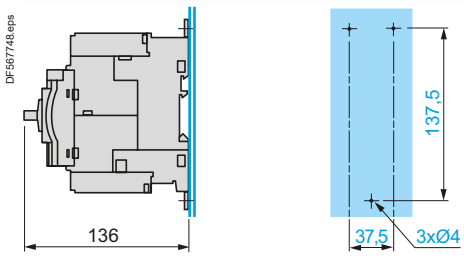

Mounting on pre-slotted plate AM1PA

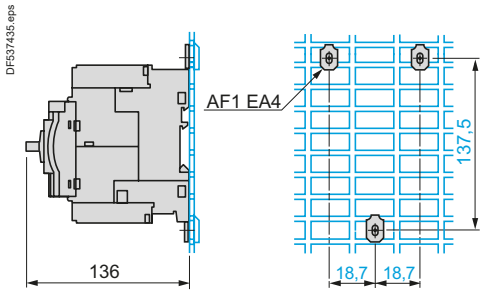

Set of busbars GV3G264

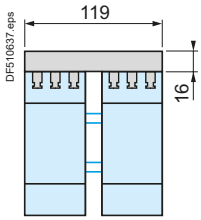

Set of busbars GV3G364

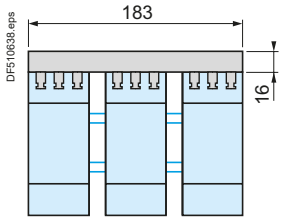

References:
pages B6/26 and B6/27
Characteristics:
pages B6/102 to B6/105
Curves:
pages B6/106 to B6/111
Schemes:
page B6/117

Dimensions and mounting

Mounting

Mounting of external operator GV3APN01, GV3APN02 or GV3APN04 for motor circuit breakers GV3L

DB127416.eps

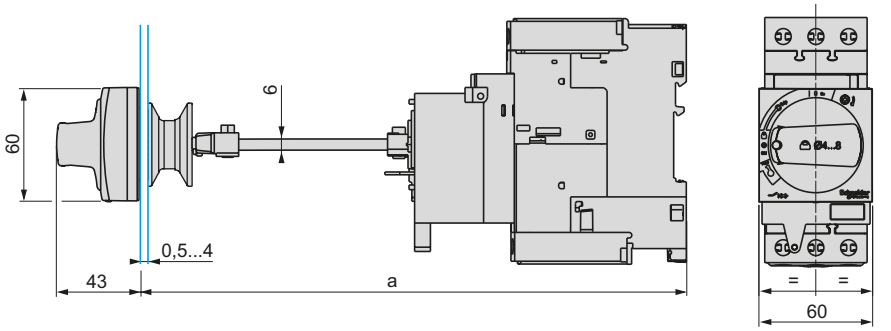

Door cut-out

DB126634.eps

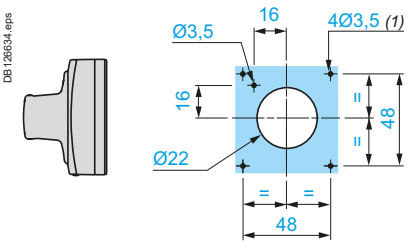

(1) For IP65 only.

	a		b	
	Mini	Maxi	Mini	Maxi
GV3APN●●	189	300	-	-
GV3APN●● + GVAPK12	300	481		

Ref.

Motor circuit breakers

References:
page B6/30

Life Is On Schneider Electric

Schemes

Schemes

GV3L●●

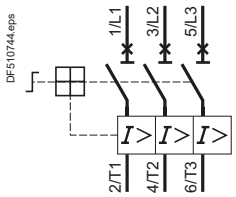

GV3P●●

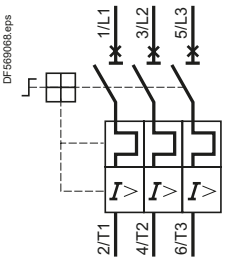

Front mounting add-on contact blocks
Instantaneous auxiliary contacts

GVAE1

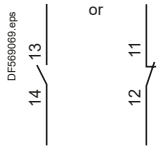

GVAE11

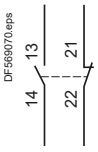

GVAE20

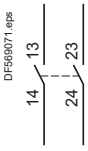

Front mounting add-on contact blocks
Instantaneous auxiliary contacts and fault signalling contacts

GVAED101

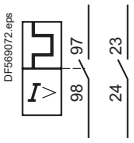

GVAED011

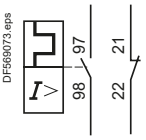

Side mounting add-on contact blocks
Instantaneous auxiliary contacts and fault signalling contacts

GVAD0110

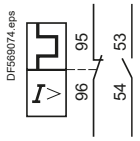

GVAD0101

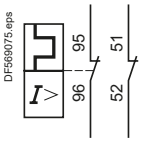

GVAD1010

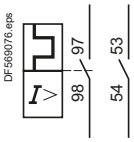

GVAD1001

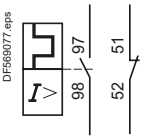

Instantaneous auxiliary contacts

GVAN11

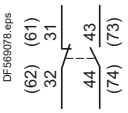

GVAN20

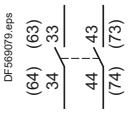

Short-circuit signalling contacts

GVAM11

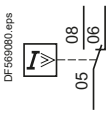

Voltage trips

GVAU●●●

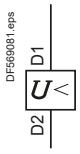

GVAS●●●

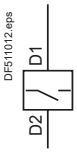

GVAX●●●

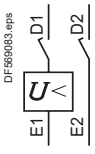

Current limiter

GV1L3

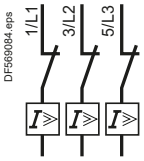

Use of fault signalling contact and short-circuit signalling contact

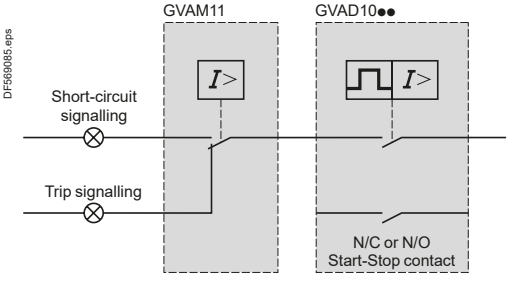

Start-Stop signalling contact blocks

GK2AX10

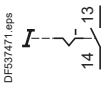

GK2AX20

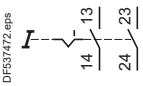

GK2AX50

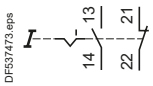

Fault signalling contact blocks

GK2AX52

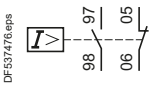

Ref.
Motor circuit breakers

TeSys Deca
- Frame 4
0.25 to 55 kW - 1/2 to 60 HP



Characteristics

Environment

Circuit breaker type				GV4L	GV4LE	GV4P	GV4PE	GV4PEM	GV4PB
Conforming to standards				IEC/EN 60947-1, IEC/EN 60947-2, IEC/EN 60947-4-1		IEC/EN 60947-1, IEC/EN 60947-2, IEC/EN 60947-4-1, UL 60497-4-1, CSA 22.2 n° 60497-4-1			IEC/EN 60947-2, IEC/EN 60947-4-1
Product certifications				CCC, EAC, BV, EU-RO MR (1), UKCA		CCC, EAC, CSA (cCSAus), ATEX, BV, EU-RO MR (1), UKCA			UL 489, CSA C22.2 n°5, UKCA
Climatic withstand				According to IACS E10					
Degree of protection (front face)	Conforming to IEC 60529	Open mounted		IP 40 front face except on connection area. Connection area: - IP20 with EverLink connector - IP40 with crimp lug connector and terminal shield.					
		In enclosure (2)		DRH = IP40 ERH = IP54 or IP65					
Shock resistance	Conforming to IEC 60068-2-27			15g - 11 ms		15g - 11 ms			
Vibration resistance	Conforming to IEC 60068-2-6			2.0 to 13.2 Hz and amplitude ±1 mm 13.2 to 100 Hz acceleration 0.7 g					
Ambient air temperature	Storage		**°C**	-50…+85					
	Operation		**°C**	-25…+70					
Temperature compensation			**°C**	Non applicable		-25…+60 (3)			
Flame resistance	Conforming to IEC 60695-2-11		**°C**	960					
Maximum operating altitude			**m**	2000 without derating. Up to 5000 with derating					
Suitable for isolation	Conforming to IEC 60947-1 § 7-1-6			Yes					
Resistance to mechanical impact			**J**	IK07 (2J)					
Sensitivity to phase failure				No		Yes			

Technical characteristics

Utilisation category	Conforming to IEC 60947-2		A		A
	Conforming to IEC 60947-4-1		AC-3 (4)		
Rated operational voltage (Ue)	Conforming to IEC 60947-2	**V**	690		
Rated insulation voltage (Ui)	Conforming to IEC 60947-2	**V**	800		
Rated voltage	Conforming to CSA C22-2 n°1, UL 60947-4-1	**V**	Non applicable		600
Rated operational frequency	Conforming to IEC 60947-4-1, UL, CSA	**Hz**	50/60		
Rated impulse withstand voltage (U imp)	Conforming to IEC 60947-2	**kV**	8		
Total power dissipated per pole		**W**	6.1		4.6
Mechanical durability (C.O.: Closing, Opening)		**C.O.**	40000		
Electrical durability for AC-3/415V duty (C.O.: Closing, Opening)	415 V In	**C.O.**	5 000		
Duty class (maximum operating rate)		**C.O./h**	25		
Maximum conventional rated thermal current (Ith)	Conforming to IEC 60947-4-1	**A**	115		
Rated duty	Conforming to IEC 60947-4-1		Continuous duty		

(1) Refer to chapter on page A5/86 for details on Marine Classification Societies.

(2) DRH = with Direct Rotary Handle
ERH = with Extended Rotary Handle.

(3) For operation up to 70 °C, please consult your regional sales office.

(4) Up to 100 A.

References:
pages B6/35 to B6/41

Curves:
pages B6/124 to B6/131

Dimensions, schemes:
pages B6/134 to B6/137

Life Is On Schneider Electric

Characteristics

Mounting characteristics

Operating position
Without derating, in relation to normal vertical mounting plane (1)

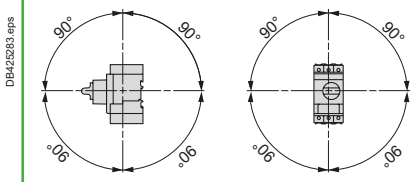

Power connection characteristics

Power connection by bare cables (EverLink connector)

Bare cables

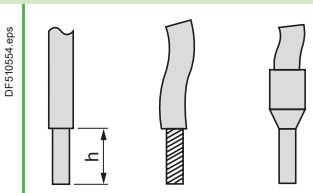

			Min.	Max.
Connection to screw clamp terminals (Max. number of conductors x c.s.a.)	Solid cable	**mm²** **AWG**	Cu 1 x 1.5 + 1 x 2.5 Cu 2 x 14	Cu 1 x 70 + 1 x 95 Cu 1 x 2/0 + 1 x 3/0
	Flexible cable without cable end	**mm²** **AWG**	Cu 1 x 1.5 + 1 x 2.5 Cu 2 x 6	Cu 1 x 50 + 1 x 70 Cu 1 x 1/0 + 1 x 2/0
	Flexible cable with cable end	**mm²** **AWG**	Cu 1 x 1.5 + 1 x 2.5 Cu 2 x 6	Cu 1 x 50 + 1 x 70 Cu 1 x 1/0 + 1 x 2/0
Tightening torque		**N.m**	5 ≤ 10 mm² / 8 AWG 9 ≥ 16 mm² / 6 AWG	
Stripping length (h)	Solid cable	**mm**	20	

Power connection by bars or lugs

Bars or lugs

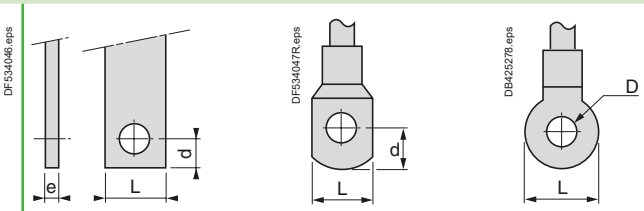

Pitch	Without spreaders	**mm**	27
	With spreaders	**mm**	35
Bars or cables with lugs	e	**mm**	≤ 8
	L	**mm**	≤ 20
	d	**mm**	≤ 7
	D	**mm**	6.4
M6 Screws	Tightening torque	**N.m**	5 ≤ 10 mm² / 8 AWG 9 ≥ 16 mm² / 6 AWG

(1) When mounting on a vertical rail, fit a stop to prevent any slippage.

References:
pages B6/35 to B6/41

Curves:
pages B6/124 to B6/131

Dimensions, schemes:
pages B6/134 to B6/137

Characteristics

Breaking capacity of GV4L and GV4LE

Circuit breaker type				GV4L●●●B GV4LE●●●B				GV4L●●●N GV4LE●●●N								GV4LE●●●S							
Rating			A	25	50	80	115	2	3.5	7	12.5	25	50	80	115	2	3.5	7	12.5	25	50	80	115
Breaking capacity conforming to IEC 60947-2	230/240 V	Icu	kA	50				100								120							
		Ics % (1)		100				100								100							
	400/415 V	Icu	kA	25				50								100							
		Ics % (1)		100				100								100							
	440 V	Icu	kA	20				50								70							
		Ics % (1)		100				100								100							
	500 V	Icu	kA	10				25								30							
		Ics % (1)		100				100								100							
	525 V	Icu	kA	-				15								18							
		Ics % (1)		-				100								100							
	690 V	Icu	kA	-				8								10							
		Ics % (1)		-				25								25							

(1) As % of Icu.

Ref.
Motor circuit breakers

Characteristics

Breaking capacity of GV4P, GV4PE, GV4PB●●●B

Circuit breaker type				GV4P●●●B GV4PE●●●B GV4PEM●●●B GV4PB●●●B					GV4P●●●N GV4PE●●●N GV4PEM●●●N GV4PB●●●N								GV4P●●●S GV4PE●●●S GV4PEM●●●S GV4PB●●●S							
Rating			A	25	50	80	115		2	3.5	7	12.5	25	50	80	115	2	3.5	7	12.5	25	50	80	115
Breaking capacity conforming to IEC 60947-2	230/240 V	Icu	kA	50					100								120							
		Ics % (1)		100					100								100							
	400/415 V	Icu	kA	25					50								100							
		Ics % (1)		100					100								100							
	440 V	Icu	kA	20					50								70							
		Ics % (1)		100					100								100							
	500 V	Icu	kA	10					25								30							
		Ics % (1)		100					100								100							
	525 V	Icu	kA	-					15								18							
		Ics % (1)		-					100								100							
	690 V	Icu	kA	-					8								10							
		Ics % (1)		-					25								25							
Breaking capacity conforming to UL 60947-4-1 and CSA 22.2 n° 60947-4-1	120 V		kA	35					65								100							
	208 V		kA	35					65								100							
	240 V		kA	35					65								100							
	480Y / 277 V		kA	18					35								65							
	480 V (2)		kA	18					35								65							
	600Y / 347 V		kA	14					18								25							
	600 V (2)		kA	14					18								25							

(1) As % of Icu.
(2) Except for MCC suitable for TAP conductor protection, in motor group installation and GV4PB.

Ref.
Motor circuit breakers

References: pages B6/37 to B6/41
Curves: pages B6/129 to B6/131
Dimensions, schemes: pages B6/134 to B6/137

Curves

Tripping curves for GV4L and GV4LE combined with thermal overload relay LRD or LR9

Average operating times at 20 ° C related to multiples of the setting current

GV4L02 and GV4LE02 to 12 with LRD05 to LRD14, GV4L80 and GV4LE80 with LRD3363

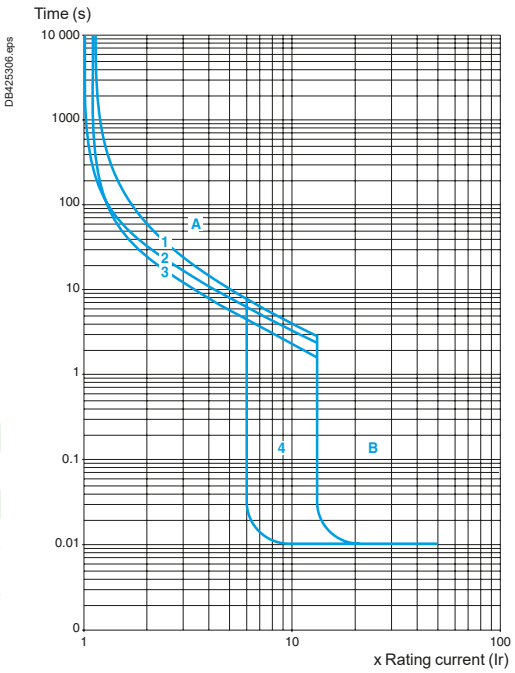

1 3 poles from cold state
2 2 poles from cold state
3 3 poles from hot state
4 6 ...14 Ir

A Thermal overload relay protection zone
B GV4L protection zone

GV4L25 AND GV4LE25 with LRD318, LRD325 GV4L50 AND GV4LE50 with LRD332, LRD340, LRD350

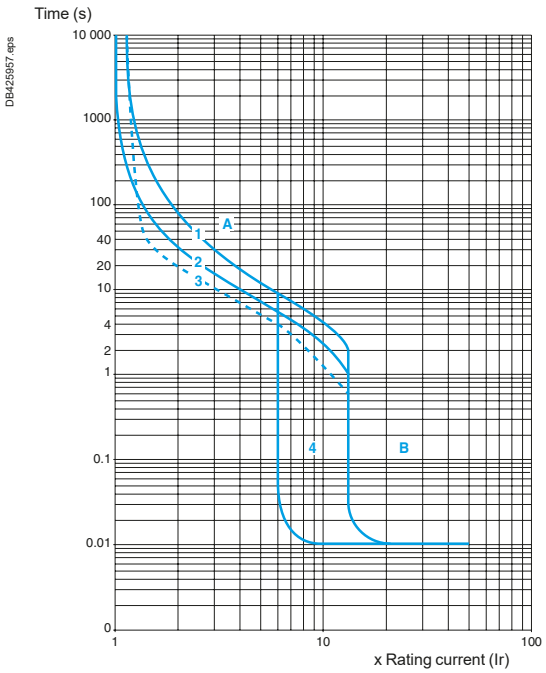

1 3 poles from cold state
2 2 poles from cold state
3 3 poles from hot state
4 6 ...14 Ir

A Thermal overload relay protection zone
B GV4L protection zone

GV4L115 and GV4LE115 with class 10 LR9F5367, LR9D5369 and class 20 LR9D5567, LR9F5569

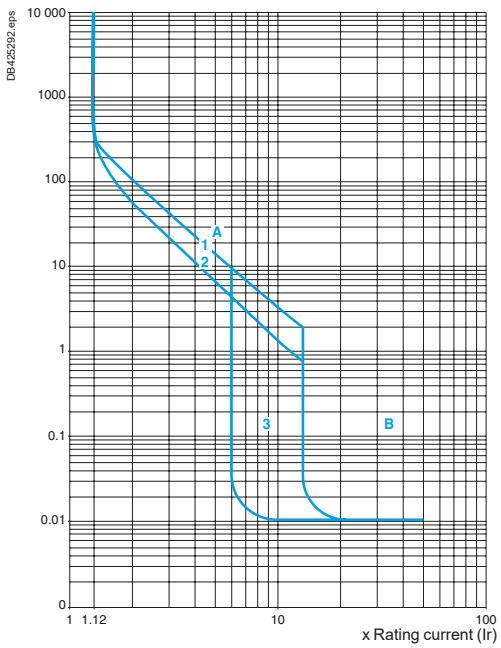

1 Cold state curve
2 Hot state curve
3 6 ...14 Ir

Ref.
Motor circuit breakers

Curves

Current limitation on short-circuit for GV4L, GV4LE (3-phase 400/415 V)

Dynamic stress

I peak = f (prospective Isc) at 1.05 Ue = 435 V

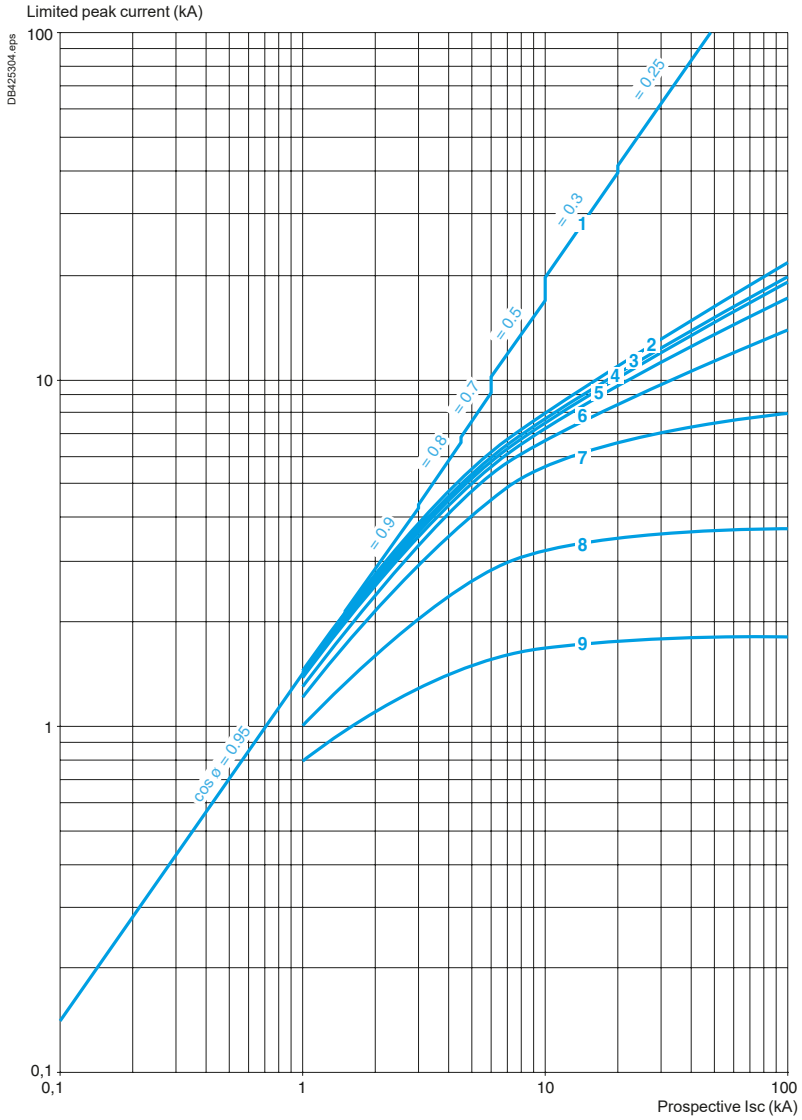

1 Maximum peak current
2 GV4L115
3 GV4L80
4 GV4L50
5 GV4L25
6 GV4L12
7 GV4L07
8 GV4L03
9 GV4L02

Ref.
Motor circuit breakers

Curves

Current limitation on short-circuit for GV4L, GV4LE + thermal overlaoad relay LRD or LR9 (3-phase 400/415 V)

Dynamic stress

I peak = f (prospective Isc) at 1.05 Ue = 435 V

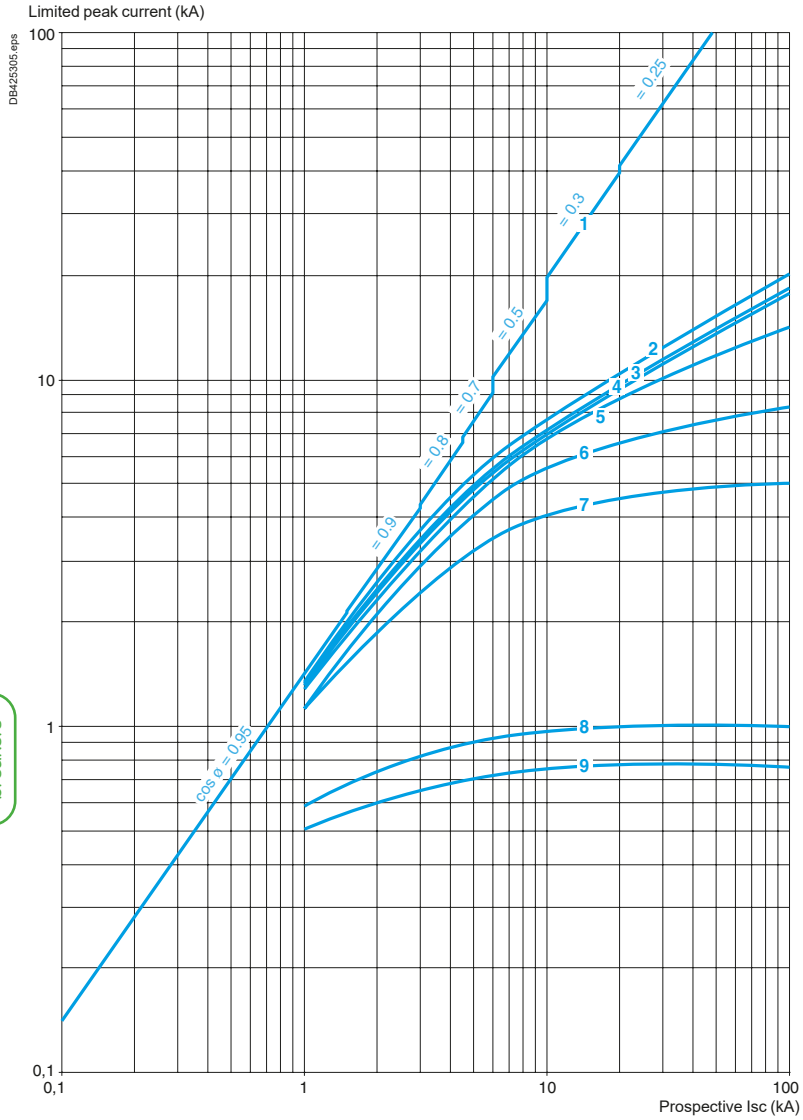

1 Maximum peak current
2 GV4L115 + LR9D5367 or LR9F5367
3 GV4L80 + LRD3361
4 GV4L50 + LRD340
5 GV4L25 + LRD325
6 GV4L12 + LRD313
7 GV4L07 + LRD12
8 GV4L03 + LRD07
9 GV4L02 + LRD07

Ref.
Motor circuit breakers

Curves

Thermal limit on short-circuit for GV4L, GV4LE

Thermal limit in kA²S

Sum of kA²S = f (prospective Isc) at 1.05 Ue = 435 V

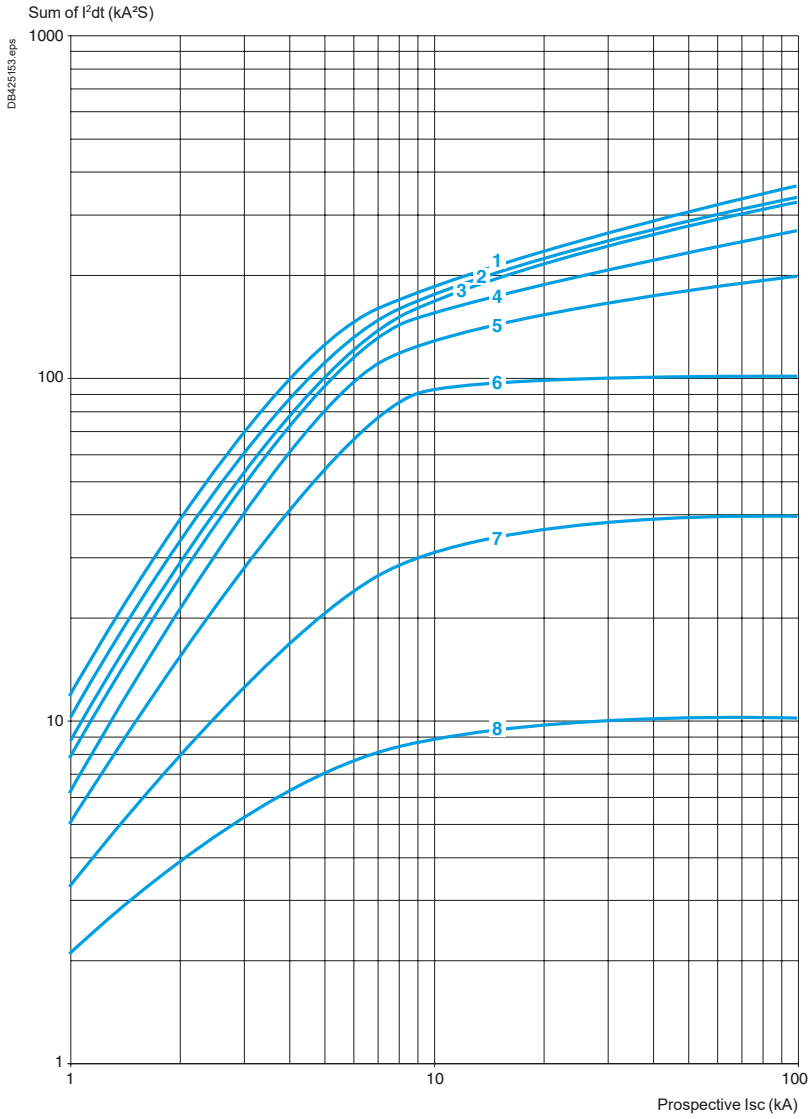

1 GV4L115
2 GV4L80
3 GV4L50
4 GV4L25
5 GV4L12
6 GV4L07
7 GV4L03
8 GV4L02

Ref.
Motor circuit breakers

Curves

Thermal limit on short-circuit for GV4L, GV4LE + thermal overlaoad relay LRD or LR9

Thermal limit in kA²S in the magnetic operating zone

Sum of kA²S = f (prospective Isc) at 1.05 Ue = 435 V

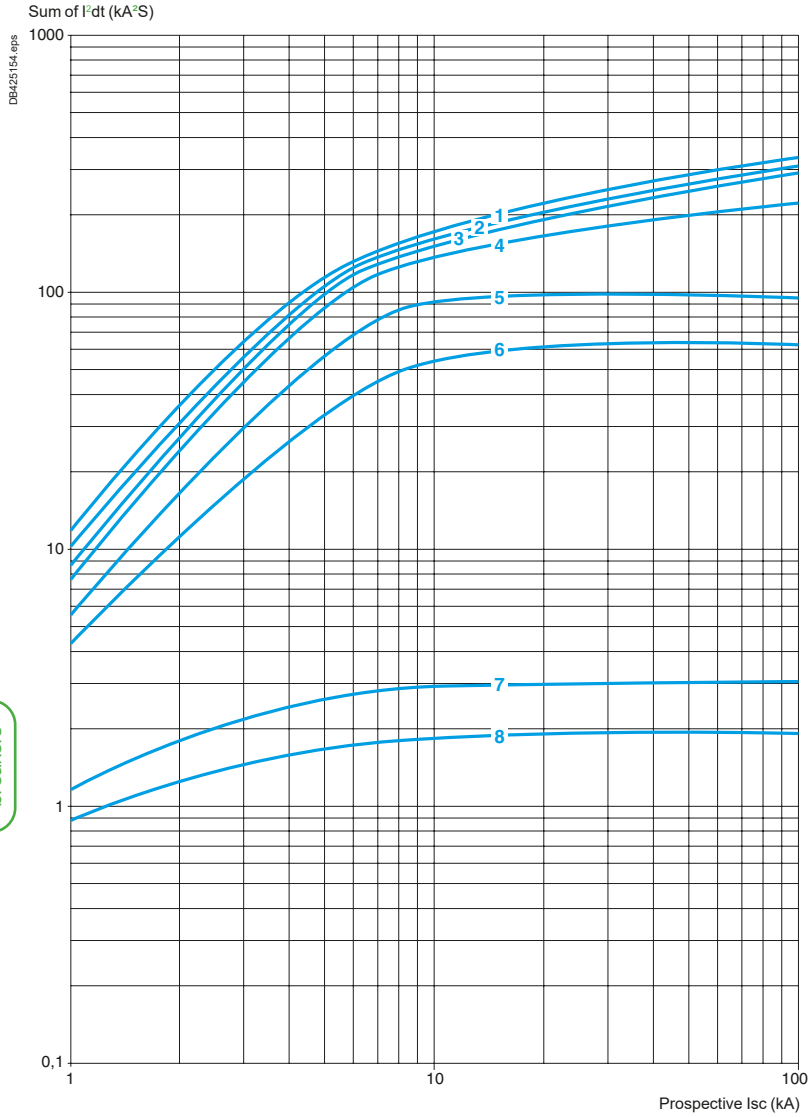

1 GV4L115 + LR9D5367 or LR9F5367
2 GV4L80 + LRD3361
3 GV4L50 + LRD340
4 GV4L25 + LRD325
5 GV4L12 + LRD313
6 GV4L07+ LRD12
7 GV4L03+ LRD07
8 GV4L02 + LRD07

Ref.
Motor circuit breakers

Curves

Thermal-magnetic tripping curves for GV4P, GV4PE, GV4PEM, GV4PB

Average operating times at 20 °C related to multiples of the setting current

GV4P, GV4PE, GV4PEM

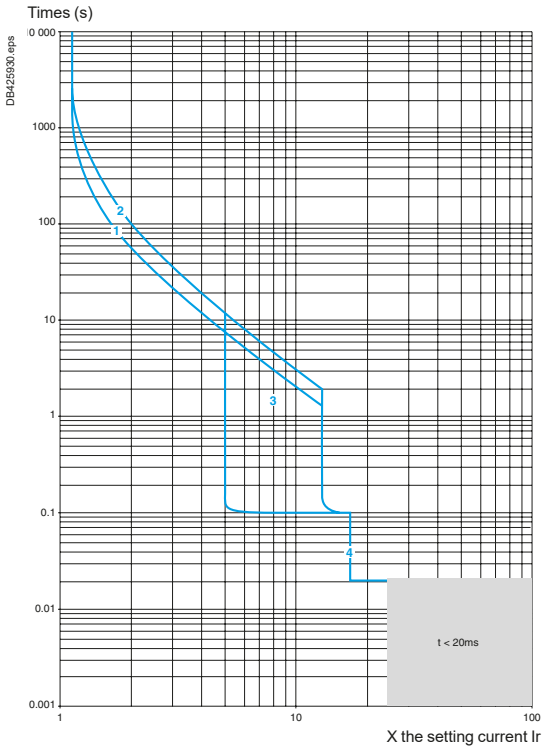

GV4P, GV4PE, GV4PEM

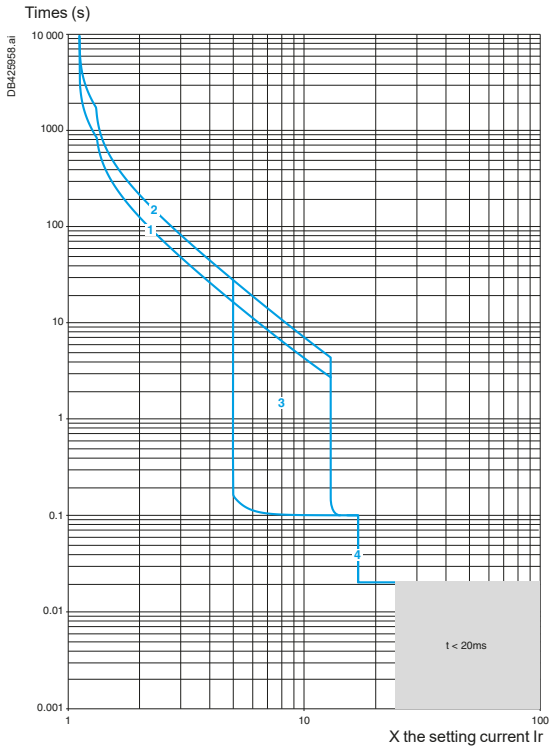

GV4PB

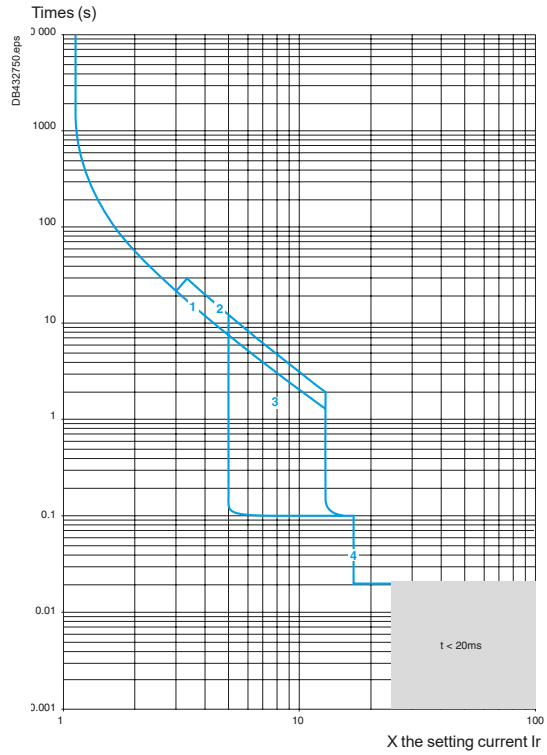

GV4PB

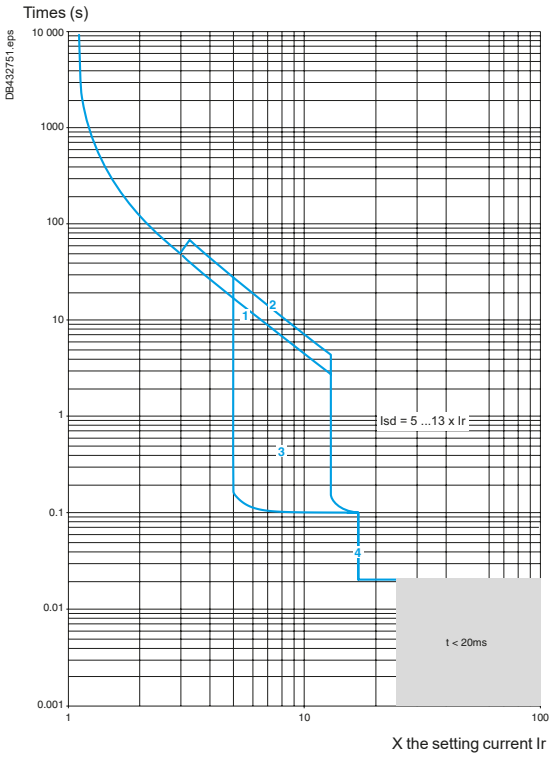

Hot state

1 Class 10
2 Class 20
3 Isd = 13 x Ir (GV4P - GV4PE); Isd = 5....13 x Ir (GV4PEM - GV4PB)
4 Ii = 17 In

Cold state

1 Class 10
2 Class 20
3 Isd = 13 x Ir (GV4P - GV4PE); Isd = 5.... 13 x Ir (GV4PEM - GV4PB)
4 Ii = 17 In

References:
pages B6/37 to B6/41

Characteristics:
pages B6/120 to B6/123

Dimensions, schemes:
pages B6/134 to B6/137

Curves

Current limitation on short-circuit for GV4P, GV4PE, GV4PEM, GV4PB (3-phase 400/415 V)

Dynamic stress

I peak = f (prospective Isc) at 1.05 Ue = 435 V

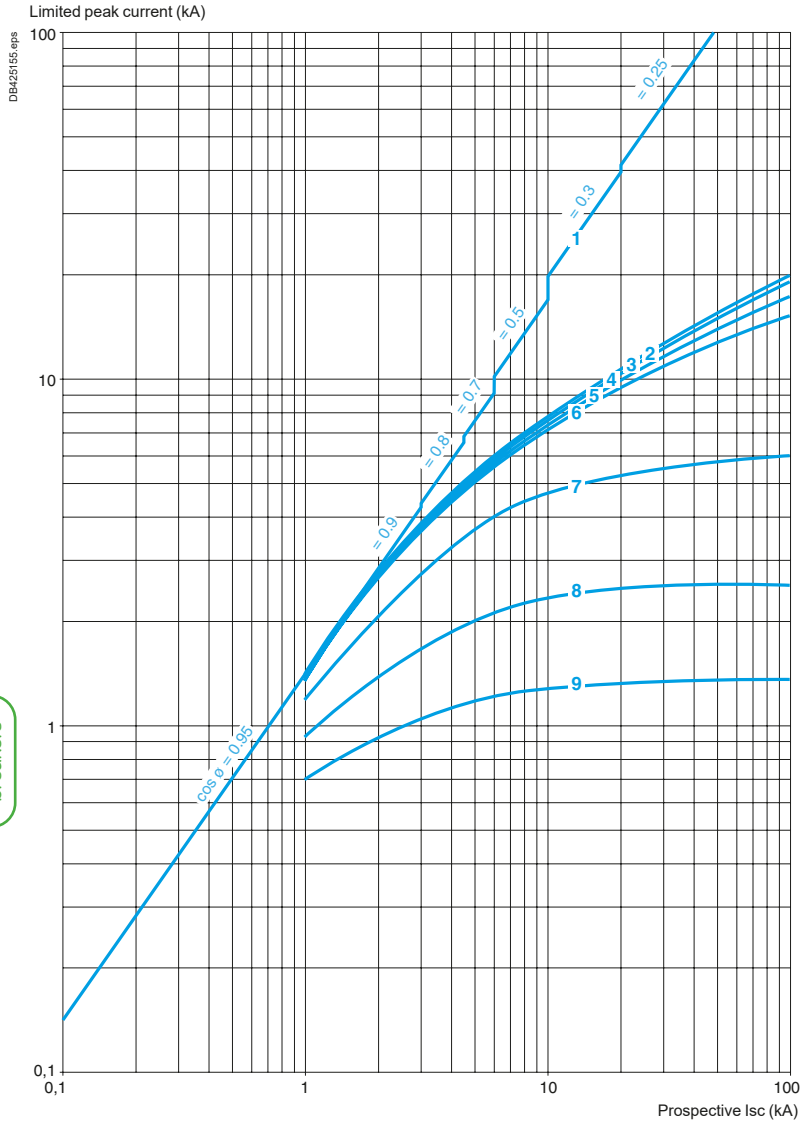

1 Maximum peak current
2 GV4P115
3 GV4P80
4 GV4P50
5 GV4P25
6 GV4P12
7 GV4P07
8 GV4P03
9 GV4P02

Ref.
Motor circuit breakers

Curves

Thermal limit on short-circuit for GV4P, GV4PE, GV4PEM, GV4PB

Thermal limit in kA²s in the magnetic operating zone

Sum of I^2dt = f (prospective Isc) at 1.05 Ue = 435 V

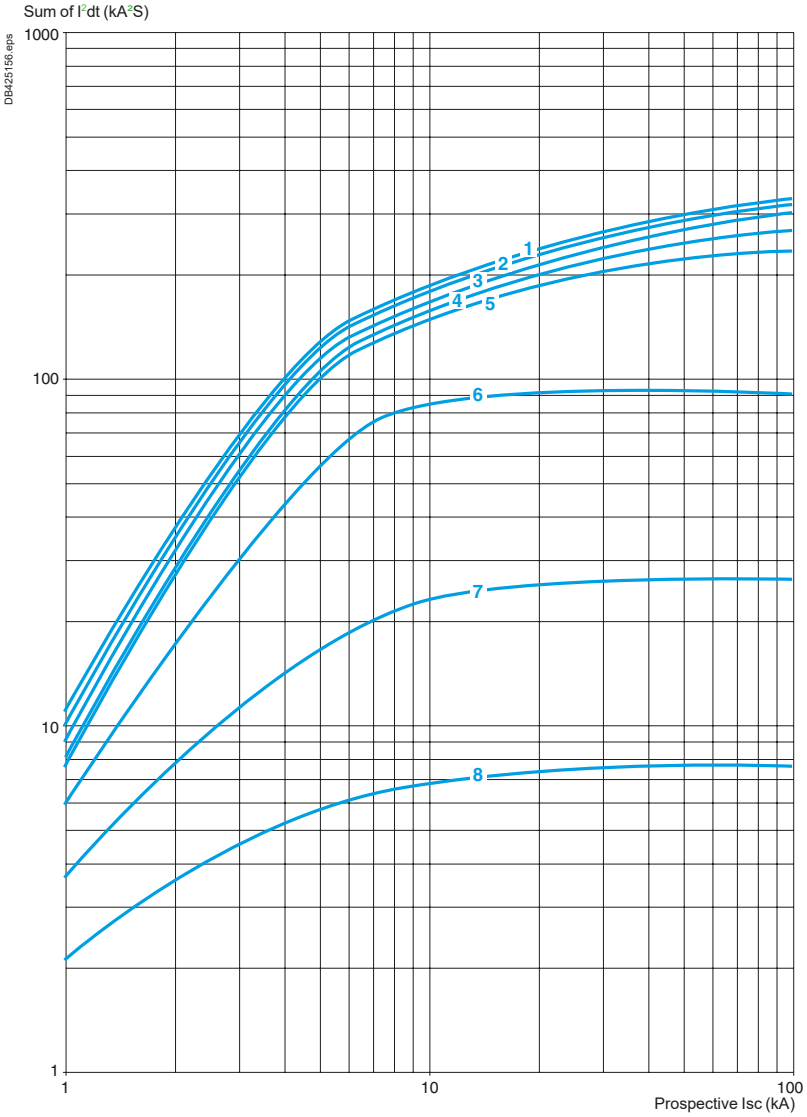

1 GV4P115
2 GV4P80
3 GV4P50
4 GV4P25
5 GV4P12
6 GV4P07
7 GV4P03
8 GV4P02

References:
pages B6/37 to B6/41

Characteristics:
pages B6/120 to B6/123

Dimensions, schemes:
pages B6/134 to B6/137

Characteristics

Characteristics of electric trips

Type of trip			GV4AU●●● MN (undervoltage release)						
Rated insulation voltage (Ui)	Conforming to IEC 60947-1	V	= Ue						
Operational voltage (Ue)	Conforming to IEC 60947-1	V	24 V AC/DC	48 V AC/DC	110-130 V AC 125 V DC	208-240 V 60 Hz 220-240 V 50 Hz	277 V 60 Hz	380-415 V 60 Hz	440-480 V 60 Hz
Inrush consumption	~ / ⎓	VA	< 7 VA < 2 W	< 7 VA < 2 W	< 7 VA < 2 W	< 7 VA	< 7 VA	< 7 VA	< 7 VA
Sealed consumption	~ / ⎓	VA	< 7 VA < 2 W	< 7 VA < 2 W	< 7 VA < 2 W	< 7 VA	< 7 VA	< 7 VA	< 7 VA
Operating time	Conforming to IEC 60947-1	ms	< 50						
On-load factor			100 %						
Cabling (spring connection)	Number of conductors		1 per terminal						
	Solid cable	mm²	No solid cable allowed						
	Flexible cable without cable end	mm² AWG	Cu 0.5 mm² to 1.5 mm² Cu 20AWG to 16AWG						
	Flexible cable with cable end	mm²	No cable with cable end allowed						
Tightening torque		N.m	NA						
Mechanical durability (C.O.: Close - Open)		C.O.	20000						

Characteristics of electric trips

Type of trip			GV4AS●●● MX (Shunt trip)				
Rated insulation voltage (Ui)	Conforming to IEC 60947-1	V	= Ue				
Operational voltage (Ue)	Conforming to IEC 60947-1	V	24 V AC/DC	48 V AC/DC	110-130 V AC 125 V DC	208-240 V 60 Hz 220-240 V 50 Hz	380-415 V 50 Hz 440-480 V 60 Hz
Inrush consumption	~ / ⎓	VA	< 6 VA < 10 W	< 6 VA < 10 W	< 6 VA < 10 W	< 6 VA	< 6 VA
Sealed consumption	~ / ⎓	VA	< 4 VA < 1 W	< 4 VA < 1 W	< 4 VA < 1 W	< 4 VA	< 4 VA
Operating time	Conforming to IEC 60947-1	ms	< 50				
On-load factor			100 %				
Cabling (spring connection)	Number of conductors		1 per terminal				
	Solid cable	mm²	No solid cable allowed				
	Flexible cable without cable end	mm² AWG	Cu 0.5 mm² to 1.5 mm² Cu 20AWG to 16AWG				
	Flexible cable with cable end	mm²	No cable with cable end allowed				
Tightening torque		N.m	NA				
Mechanical durability (C.O.: Close - Open)		C.O.	20000				

References:
page B6/43

Characteristics

Auxiliary contact characteristics

Type of contacts				Auxiliary contact block GV4AE11						SDx contact module for GV4PEM , GV4PB, GV4ADM1111					
Rated insulation voltage(Ui)	Conforming to IEC 60947-1		V	690						250					
	Conforming to CSA C22-2 n°14 UL 508		V	-						-					
Conventional thermal current (Ith)	Conforming to IEC 60947-5-1		A	5						5					
	Conforming to CSA C22-2 n°14 UL 508		A	5						5					
Mechanical durability (C.O.: Close - Open)			C.O.	40 000						100 000					
Operational power and current conforming to IEC 60947-5-1 a.c. operation	**Rated operational voltage (Ue)**		V	**24**	**48**	**110/ 127**	**230/ 240**	**380/ 440**	**660/ 690**	**48**	**110**	**230/ 240**	**380/ 415**	**440**	**690**
	Operational power (AC12)		VA	120	240	635	1200	2200	3450			400			
	Occasional breaking and making capacities		kVA	1.2	2.4	6.35	12	22	34.5						
	Operational current (Ie)	AC-12	A	5	5	5	5	5	5						
		AC-15	A	5	5	4	3	2.5	0.1		3	1.5			
Operational power and current conforming to IEC 60947-5-1 d.c. operation	**Rated operational voltage (Ue)**		V	**24**	**48**	**110**	**250**			**24**	**48**	**60**	**110**	**250**	
	Operational power (DC12)		W	120	120	66	75			50					
	Occasional breaking and making capacities		W	1200	1200	660	750								
	Rated operational current (Ie)	DC-12	A	5	2.5	0.6	0.3								
		DC-13	A	2.5	1.2	0.35	0.05			2			0.22	0.11	
		DC-14	A	1	0.2	0.05	0.03								
Low power switching reliability of contact				10^{-6} at 17 V / 2 mA											
Minimum operational conditions d.c. operation			V	17											
			mA	2											
Short-circuit protection				5 A fuse gG conforming to IEC 60947-5-1											
Spring terminals cabling	Number of conductors			1 per hole											
	Solid cable		mm^2	-						0.2 to 1.5					
	Flexible cable without cable end		mm^2	0.5 to 1.5						0.2 to 2.5					
	Flexible cable with cable end		mm^2	-						0.25 to 1.5					

References:
page B6/42

Dimensions and mounting

GV4 with toggle: GV4LE, GV4PE, GV4PEM, GV4PB

With EverLink® connector

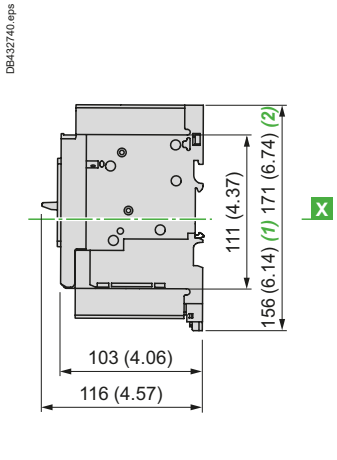

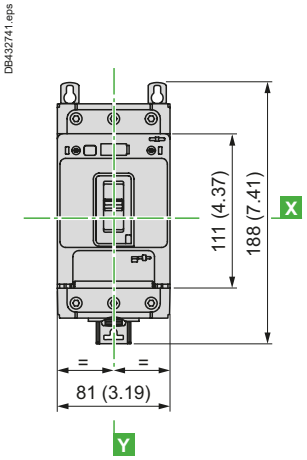

(1) ***GV4LE***, ***GV4PE***, ***GV4PEM***.
(2) ***GV4PB***.

With crimp lug connector

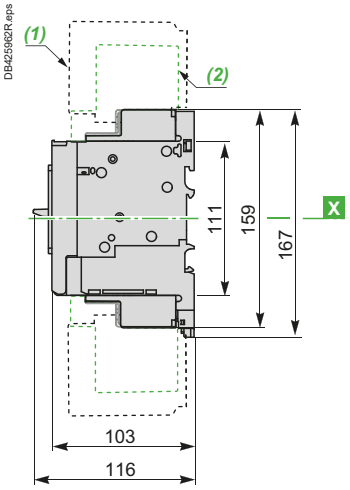

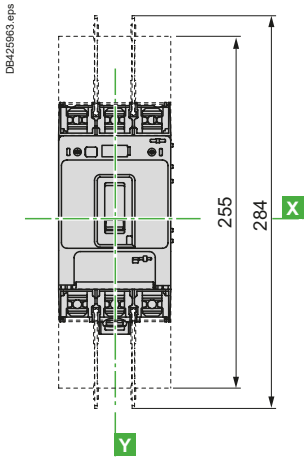

(1) *Interphases barriers.*
(2) *Long terminal shield.*

GV4 with rotary handle: GV4L, GV4P, or GV4LE, GV4PE, GV4PEM, GV4PB with GV4ADN01, GV4ADN02 direct mounting rotary handle

Dimensions

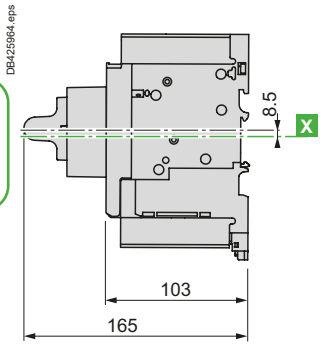

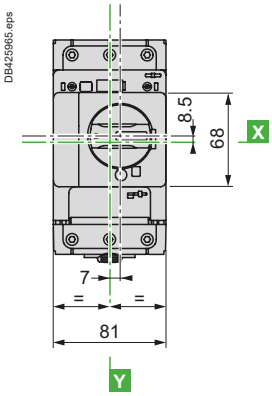

SDx module

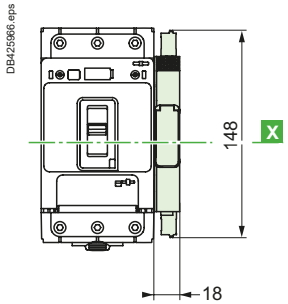

Ref.
Motor circuit breakers

Dimensions and mounting

GV4L, GV4P, GV4LE, GV4PE, GV4PEM, GV4PB

Panel mounting with M4 screws

DB425163.eps

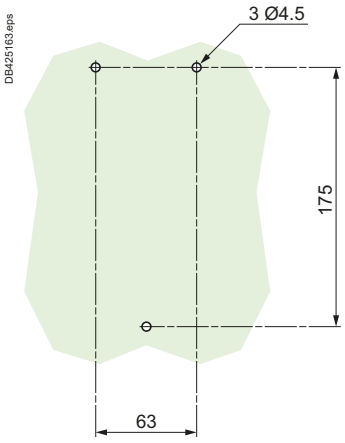

Door cut-out for rotary handle

DB425164.eps

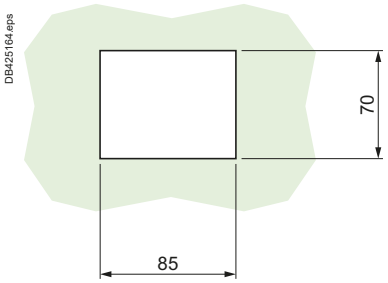

Minimum safety clearance

DB425971.eps

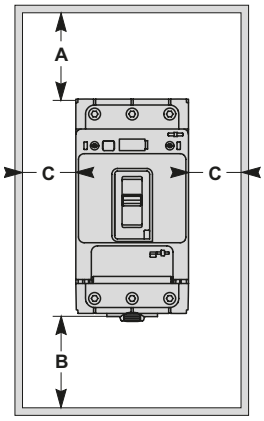

Toggle-type, rotary handle-type: identical clearance values.

Safety clearance (mm)

	Painted sheet metal			Bare sheet metal		
	A	B	C	A	B	C
No accessory	30	0	0	40	0	5
Interphase barriers	0	0	0	0	0	5
Long terminal shield	0	0	0	0	0	5

Ref.
Motor circuit breakers

Dimensions and mounting

GV4 with extended rotary handle

Front extended rotary handle GV4APN01, GV4APN02, GV4APN04

DB436340.eps

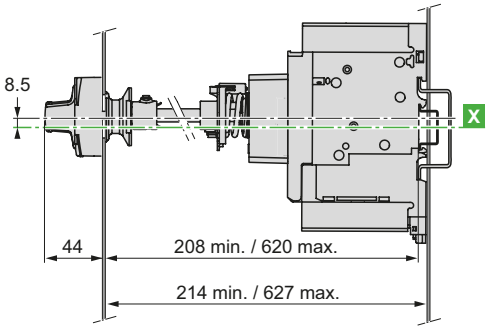

DB436341.eps

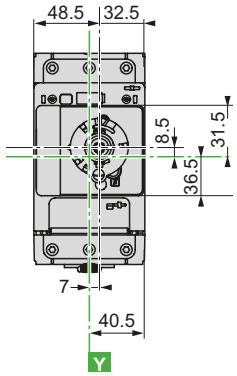

Ref.

Side (left or right) extended rotary handle LV426935, LV426936

DB425970.eps

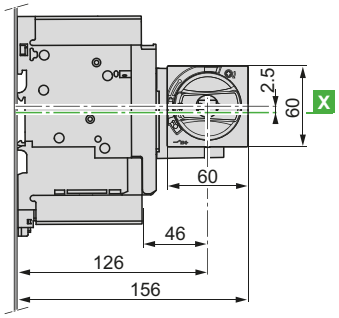

DB425969.eps

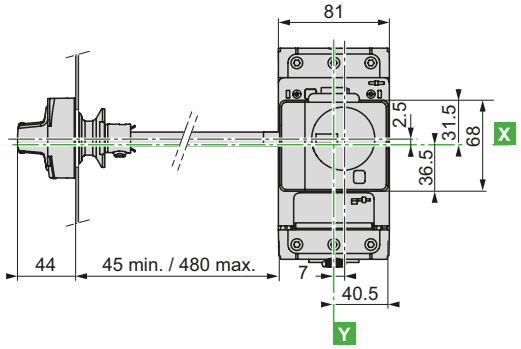

Motor circuit breakers

Front and side extended rotary handle, door/side panel cut-out

Front and side extended rotary handle	IP65, door panel cut-out	IP54, door/side panel cut-out

DB436342.eps

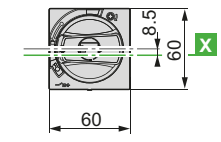

DB425177.eps

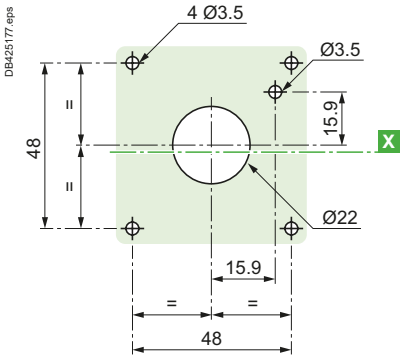

DB425973.eps

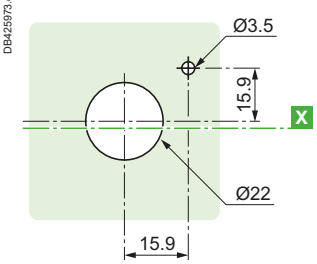

References:
pages B6/45 to B6/47

Schemes

Magnetic motor circuit breakers

GV4L, GV4LE

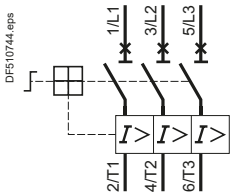

GV4P, GV4PE, GV4PEM, GV4PB

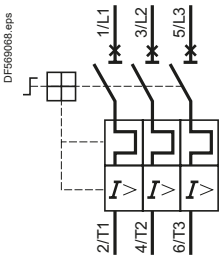

Accessories

Electrical trips

MN GV4AU●●●

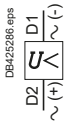

MX GV4AS●●●

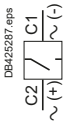

GV4AE11 auxiliary contacts

Used as OF contact



Used as SD contact



Side mounting add-on contact blocks
Instantaneous auxiliary contacts and fault signalling contacts

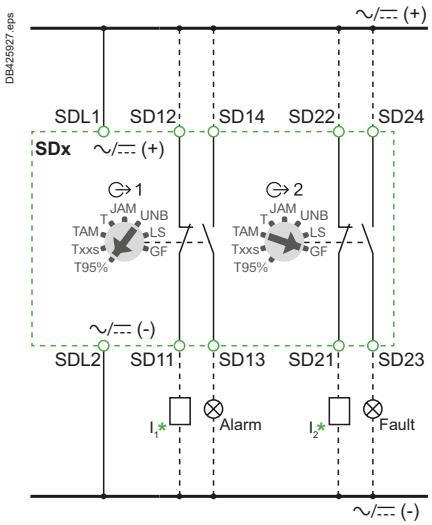

* I1, I2: PLC digital inputs - used as alarm inputs, as an example.

Ref.
Motor circuit breakers

TeSys Giga - Frame 5, 6

55 to 250 kW



Characteristics

Environment

Circuit breaker type				GV5P/ GV6P
Conforming to standards				IEC/EN 60947-4-1 IEC/EN 60947-2 UL 60947-4-1 CSA C22.2 n° 60947-4-1
Product certifications				CB, UKCA,UL, CSA, EAC, DNV-GL (1)
Climatic withstand				According to IACS E10
Degree of protection (front face)	Conforming to IEC 60529	Bare circuit breaker with terminal shields		IP40 with direct rotary handle
		Installed in switchboard		IP40 with direct rotary handle / IP43 with MCC conversion accessory/ IP55 with extended rotary handle
Shock resistance	Conforming to IEC 60068-2-27			15 gn -11 ms
Vibration resistance	Conforming to IEC 60068-2-6			2.5 gn (25 Hz)
Ambient air temperature	Storage in packing		°C	-50…+85
	Operation	Open mounted	°C	-25… +70
		In enclosure	°C	-25...+70
Flame resistance	Conforming to IEC 60695-2-11		°C	960
Maximum operating altitude			m	2000
Suitable for isolation	Conforming to IEC 60947-1 § 7-1-6			Yes
Resistance to mechanical impact			J	0.5
Sensitivity to phase failure				Yes

Technical characteristics

Circuit breaker type			GV5P150	GV5P220	GV6P320	GV6P500
Utilisation category	Conforming to IEC 60947-2		A			
	Conforming to IEC 60947-4-1		AC-3			
Rated operational voltage (Ue)	Conforming to IEC 60947-2	V	690			
Rated insulation voltage (Ui)	Conforming to IEC 60947-2	V	800			
Rated voltage	Conforming to UL 60947-4-1, CSA C22.2 n° 60947-4-1	V	600			
Rated operational frequency	Conforming to IEC 60947-4-1 UL, CSA	Hz	50/60			
Rated impulse withstand voltage (U imp)	Conforming to IEC 60947-2	kV	8			
Total power dissipated per pole		W	9.2	17.6	19.2	39.7
Mechanical durability (C.O.: Close, Open)		C.O.	40 000	20 000	15 000	15 000
Electrical durability for AC-3 duty	400/415 V (In)	C.O.	20 000	10 000	6 000	4 000
Duty class (maximum operating rate)		C.O./h	25			
Maximum conventional rated thermal current (Ith)	Conforming to IEC 60947-4-1	A	70…150	100...220	160...320	250...500
Rated duty	Conforming to IEC 60947-4-1		Continuous duty			

*(1) **EAC & DNV-GL** certifications are in progress. Please check with your nearest sales office for more details.*

Curves

Thermal-magnetic tripping curves for GV5P

MicroLogic 2.2 M - 150/220 A

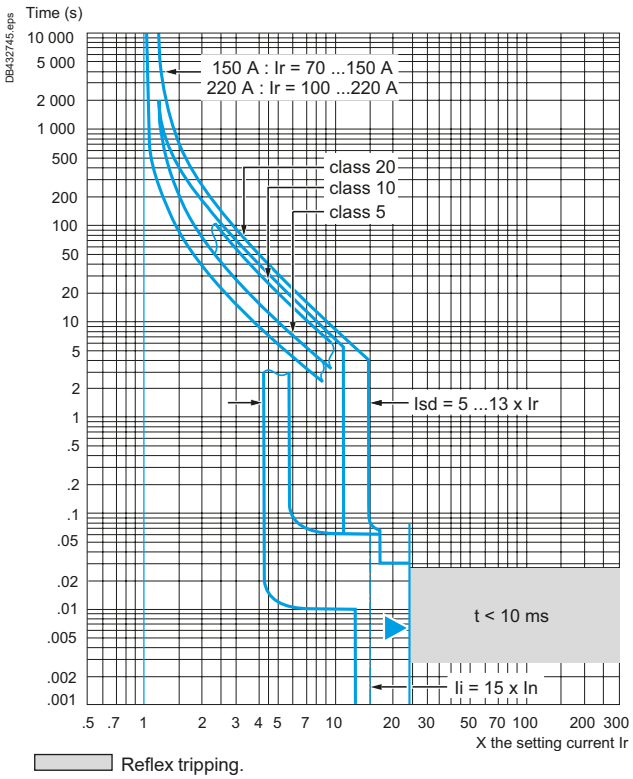

Reflex tripping.

Thermal-magnetic tripping curves for GV6P

MicroLogic 2.3 M - 320 A

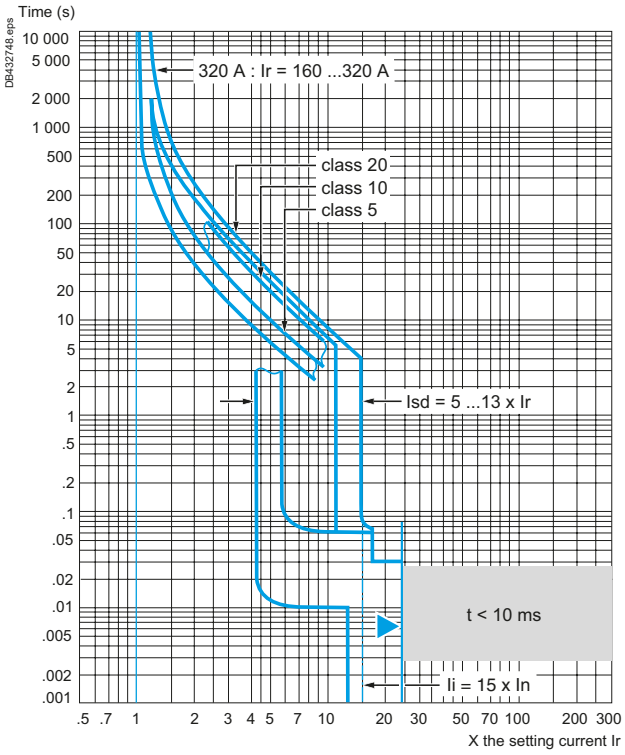

MicroLogic 2.3 M - 500 A

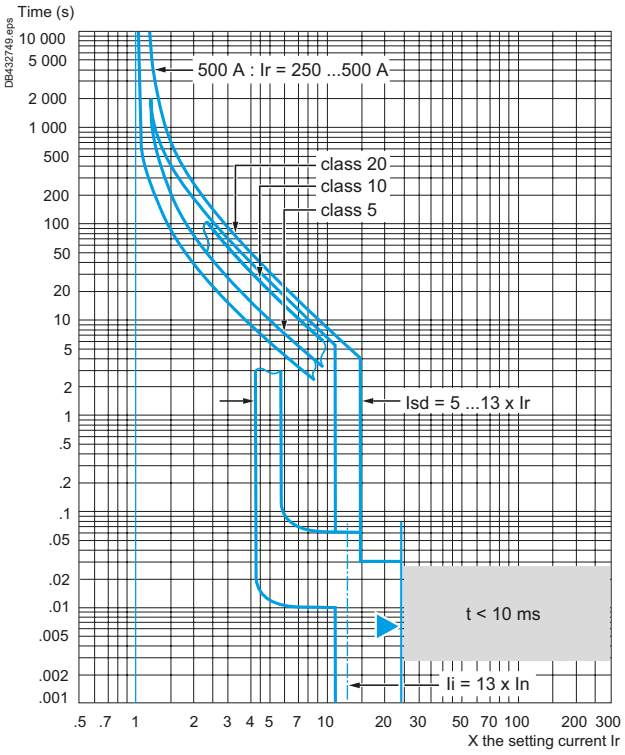

Reflex tripping.

References:
pages B6/51 to B6/55
Characteristics:
page B6/140
Dimensions:
pages B6/146 to B6/151
Schemes:
page B6/152

Curves

Current limitation on short-circuit (3-phase 400 - 415 V)

Dynamic stress

For GV5P/6P●●●F/H type

Limited peak current (kA)

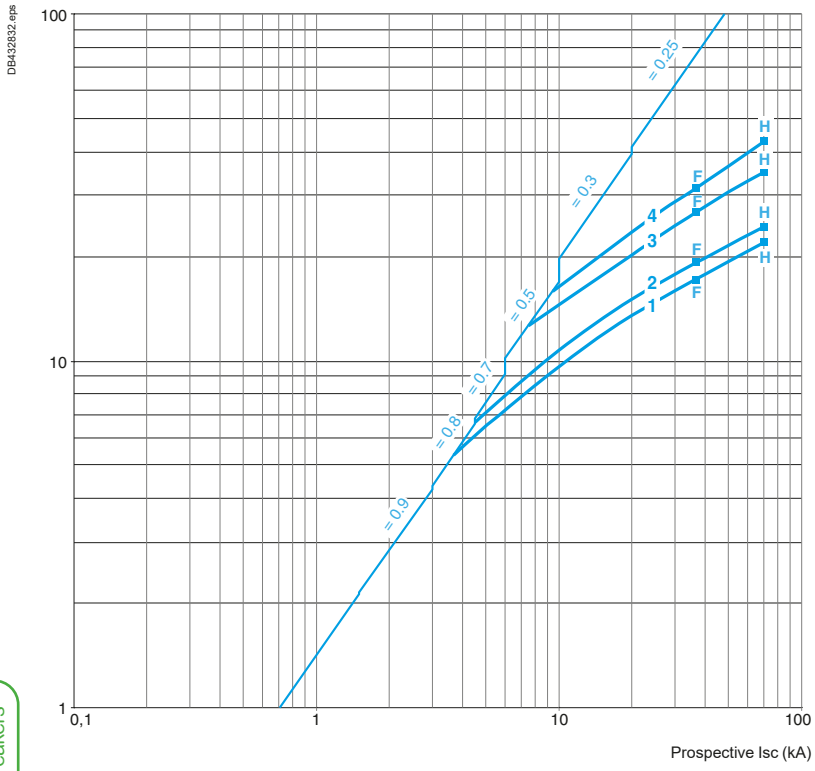

1 GV5P150F/H
2 GV5P220F/H
3 GV6P320F/H
4 GV6P500F/H

Ref.
Motor circuit breakers

Curves

Maximum thermal limit on short-circuit

Thermal limit in kA²s in the magnetic operating zone

Sum of I²dt = f (prospective Isc) at 1.05 Ue = 435 V

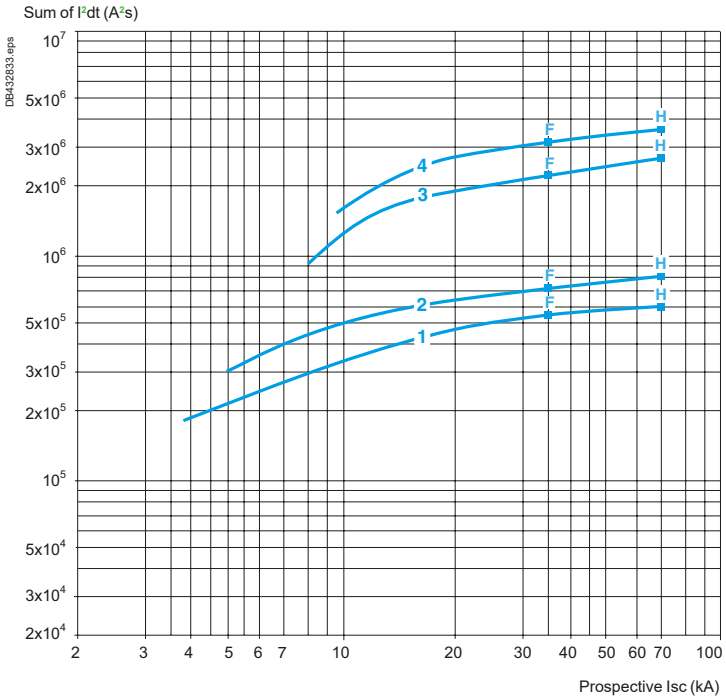

1 GV5P150F/H
2 GV5P220F/H
3 GV6P320F/H
4 GV6P500F/H

Ref.
Motor circuit breakers

Characteristics

Characteristics of GV5P/GV6P electric trips

Type of trip			LV42940● undervoltage trip	LV42938● shunt trip
Rated insulation voltage (Ui)	Conforming to IEC 60947-1	**V**	690	690
	Conforming to CSA C22-2 n°14, UL 508	**V**	600	600
Operational voltage (Ue)	Conforming to IEC 60947-1	**V**	0.85...1.1 Uc	0.7...1.1 Uc
Drop-out voltage		**V**	0.7...0.35 Uc	0.7...0.35 Uc
Inrush consumption	~	**VA**	< 10	
Sealed consumption	~	**VA**	< 5	
Operating time	Conforming to IEC 60947-1	**ms**	From the moment the voltage reaches its operational value until opening of the circuit breaker. < 50	
On-load factor			100 %	
Cabling	Number of conductors		1	
	Solid cable	**mm²**	1.5	
	Flexible cable without cable end	**mm²**	1.5	
	Flexible cable with cable end	**mm²**	1	
Tightening torque		**N.m**	1.2	
Mechanical durability (C.O.: Close - Open)		**C.O.**	50 % of the mechanical durability of the circuit breaker.	

Characteristics of GV5P/GV6P thermal fault module

Type of trip			LV429424 (1)
Operational voltage (Ue)	Conforming to IEC 60947-1	**V**	24 to 415 V AC/ DC
Conventional thermal current (Ith)	Conforming to IEC 60947-5-1	**A**	80 mA max.

*(1) **LV429424** takes the place of the AU/AS electric trip coil and an auxiliary contact.*

Ref.
Motor circuit breakers

Characteristics

Auxiliary contact characteristics

Type of contacts				**29450**						**29452**				
Rated insulation voltage(Ui) (associated insulation coordination)	Conforming to IEC 60947-1		**V**	690						690				
Conventional thermal current (Ith)	Conforming to IEC 60947-5-1		**A**	6						5				
Mechanical durability (C.O.: Close - Open)			**C.O.**	50 000						50 000				
Operational current conforming to IEC 60947-5-1 a.c. operation				AC-12 or AC-15. 50 000 C.O.						AC-12 or AC-15. 50 000 C.O.				
	Rated operational voltage (Ue)		**V**	**24**	**48**	**110**	**220/ 240**	**380/ 440**	**690**	**24**	**48**	**110**	**230/ 240**	**380/ 415**
	Rated operational current (Ie)	AC-12	**A**	6	6	6	6	6	6	5	5	5	5	5
		AC-15	**A**	6	6	5	4	2	0.1	3	3	2.5	2	1.5
Operational current conforming to IEC 60947-5-1 d.c. operation				DC-12 or DC-14. 50 000 C.O.						DC-12 or DC-14. 50 000 C.O.				
	Rated operational voltage (Ue)		**V**	**24**		**48**		**110**	**250**	**24**		**48**		**110**	**250**
	Rated operational current (Ie)	DC-12	**A**	6		2.5		0.6	0.3	5		2.5		0.6	0.3
		DC-14	**A**	1		0.2		0.05	0.03	1		0.2		0.05	0.03
Minimum operational conditions d.c. operation			**V**	24						4				
			mA	100						1				
Short-circuit protection				By **GB2CB●●** circuit breaker (rating according to operational current for Ue ≤ 415 V) or gG fuse, 10 A max.										
Cabling	Solid cable		**mm²**	1 x 1.5 conductor						1 x 1.5 conductor				
	Flexible cable without cable end		**mm²**	1 x 1.5 conductor						1 x 1.5 conductor				
	Flexible cable with cable end		**mm²**	1 x 1.5 conductor						1 x 1.5 conductor				

Ref.
Motor circuit breakers

References: pages B6/52 to B6/56
Characteristics: page B6/140
Dimensions: pages B6/146 to B6/151
Schemes: page B6/152

Dimensions and mounting

GV5P

Dimensions

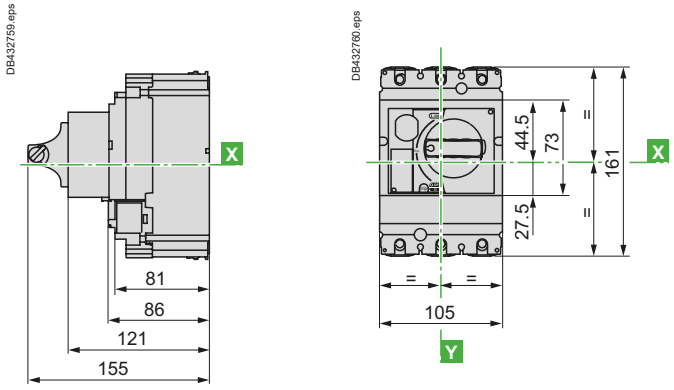

GV6P

Dimensions

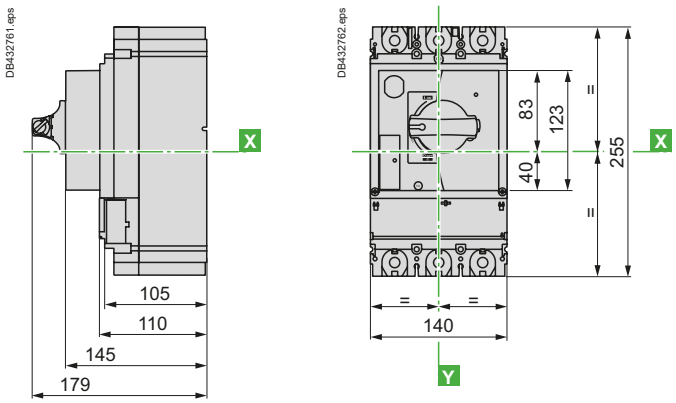

With long terminal shields or interphases barriers GV5P + GV7AC04/GV7AC01

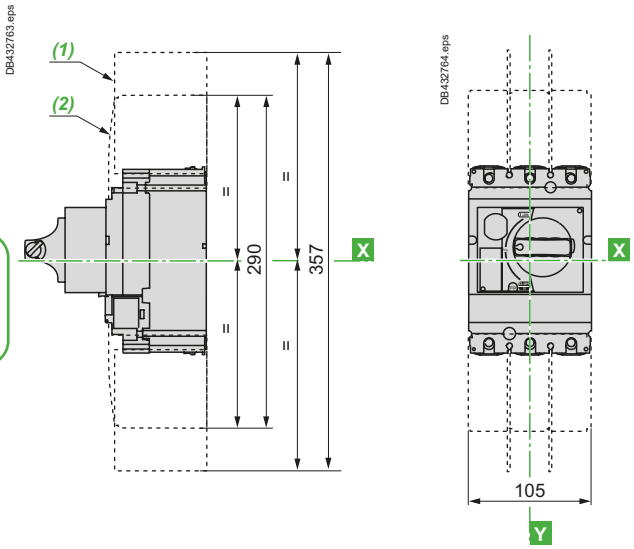

(1) *Interphases barriers:* **GV7AC04**.
(2) *Terminal shield:* **GV7AC01**.

GV6P + LV432593 / LV432595 / LV432570

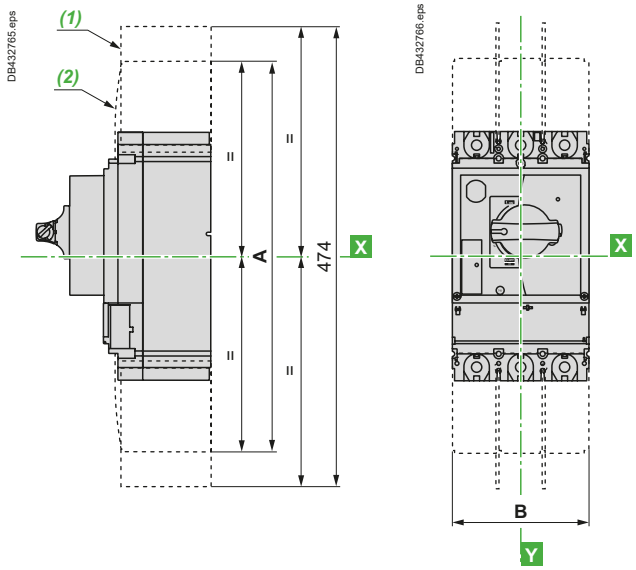

(1) *Interphases barriers:* **LV432570**.
(2) *Terminal shield:* **LV432593** *(45mm)* / **LV432595** *(52.5mm)* .

	A	B
LV432593	400	140
LV432595	480	157.5

Insulating screen

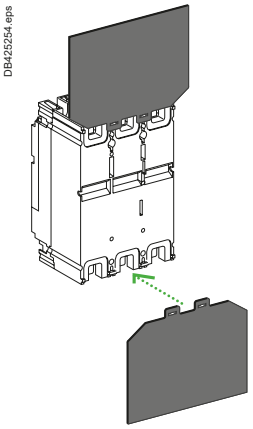

Motor circuit breaker		GV5P + GV7AC05	GV6P + LV432578
3P	W x H x thickness (mm)	140 x 105 x 1	203 x 175 x 1.5

References: pages B6/51 to B6/56
Characteristics: page B6/140
Curves: pages B6/141 to B6/143
Schemes: page B6/152

Life Is On Schneider Electric

Dimensions and mounting

GV5P/GV6P

Panel mounting - GV5P

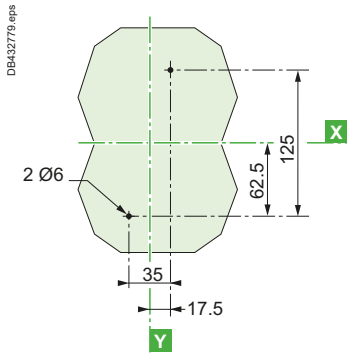

Panel mounting - GV6P

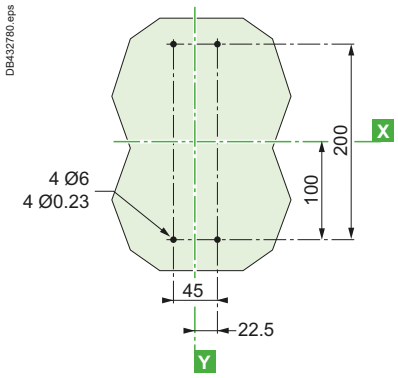

Mounting on 2 mounting rails for GV5P only

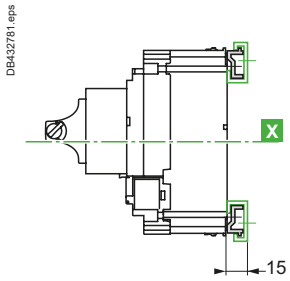

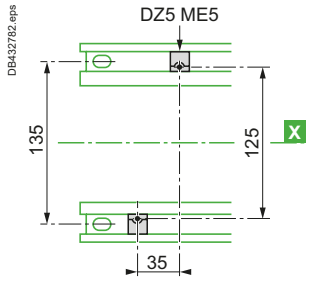

Door cut-out mounting GV5P

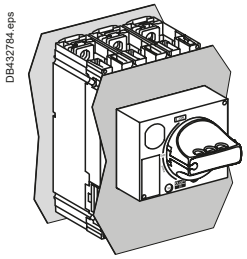

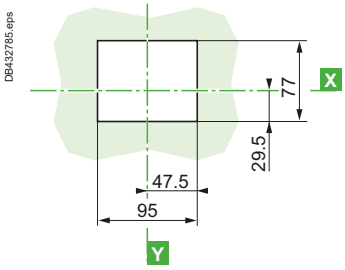

With access to trip unit

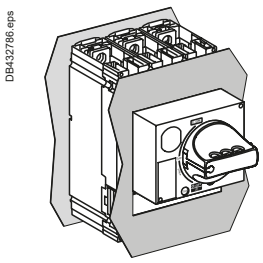

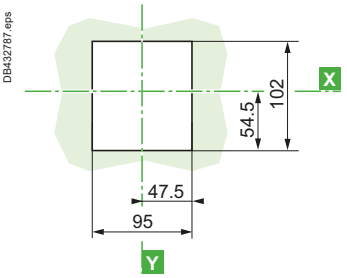

Door cut-out mounting GV6P

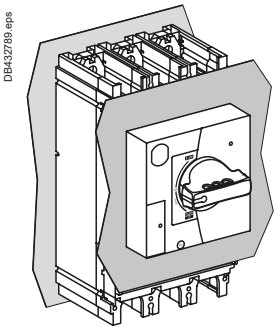

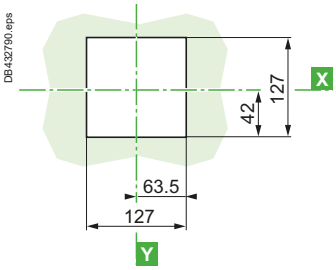

With access to trip unit

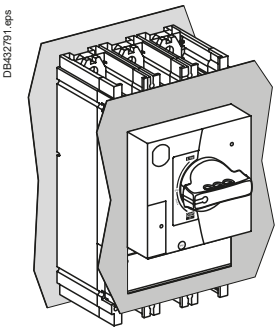

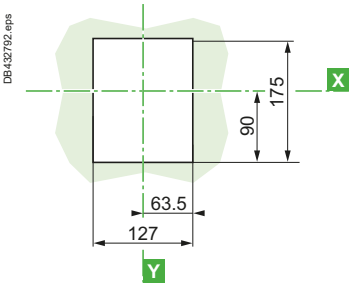

Ref.
Motor circuit breakers

GV5P

Minimum electrical clearance

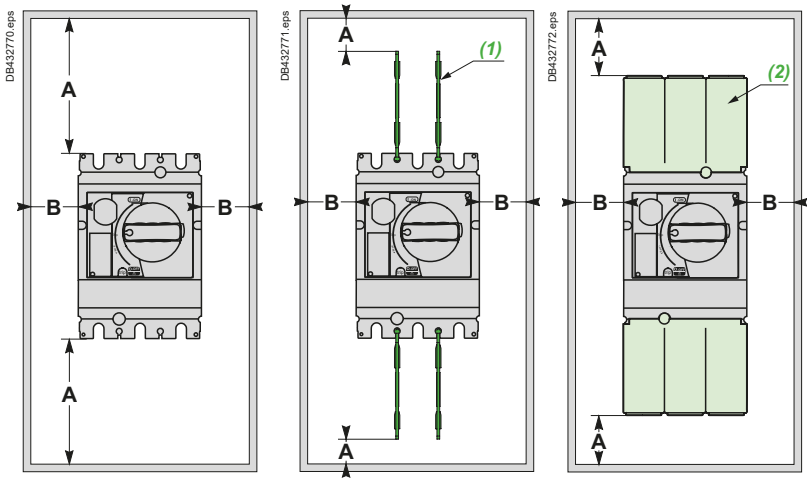

Clearance in mm

		Painted sheet metal		Bare metal plate	
		A	B	A	B
No accessories	V ≤ 500 V~	30	0	40	20
	V > 500 V~	-	-	-	-
Interphases barriers [1]	V ≤ 500 V~	0	0	10	20
	V > 500 V~	-	-	-	-
Terminal shield [2]	V ≤ 500 V~	0	0	10	10
	V > 500 V~	30	10	40	20

GV6P

Minimum electrical clearance

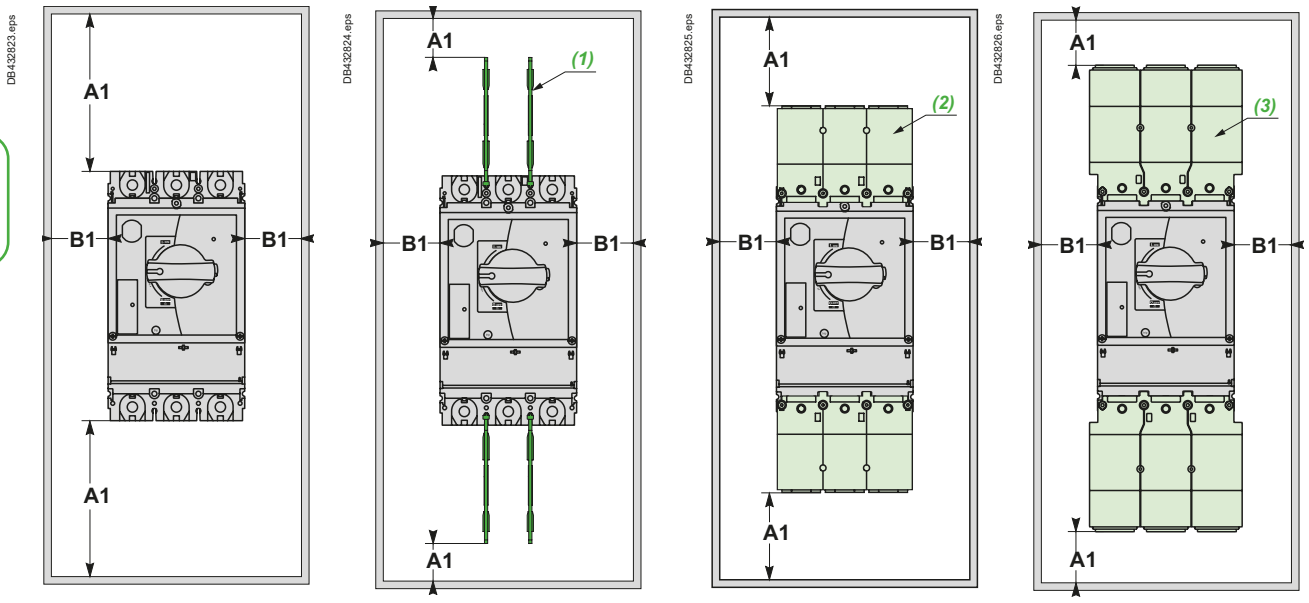

Clearance in mm

		Painted sheet metal		Bare sheet metal	
		A1	B1	A1	B1
No accessories	V ≤ 500 V~	30	0	40	20
	V > 500 V~	-	-	-	-
Interphase barriers [1]	V ≤ 500 V~	0	0	10	20
	V > 500 V~	-	-	-	-
Long terminal shield (LV432593) [2]	V ≤ 500 V~	30	0	40	10
	V > 500 V~	50	0	50	20
Long terminal shield (LV432595) [3]	V ≤ 500 V~	0	0	10	10
	V > 500 V~	30	0	30	20

Ref.
Motor circuit breakers

Dimensions and mounting

GV5P/GV6P

GV5 with extended rotary handle GV7AP01/ GV7AP02

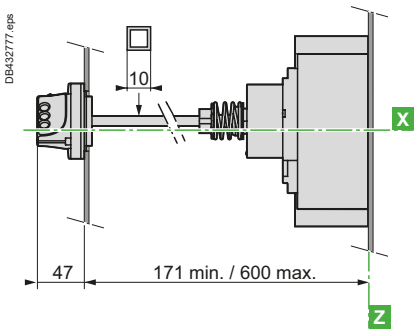

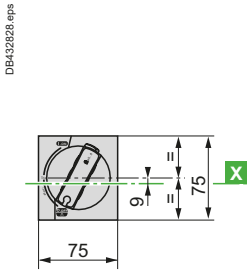

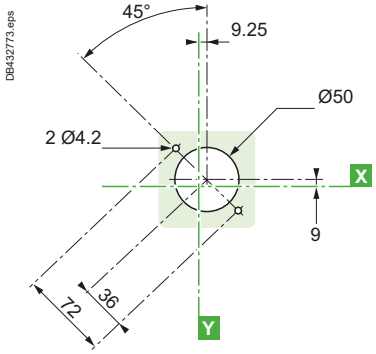

GV6 with extended rotary handle LV432598/ LV432600

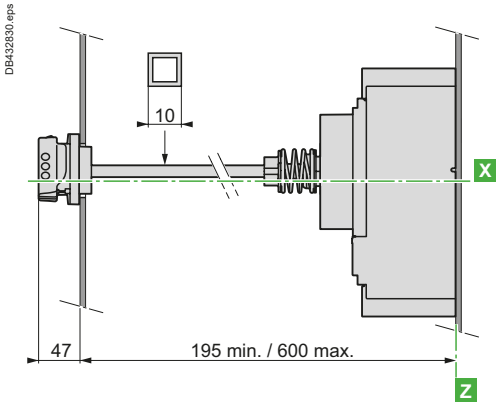

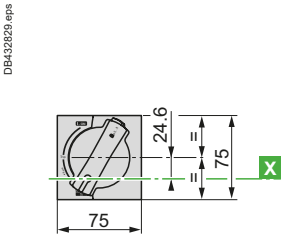

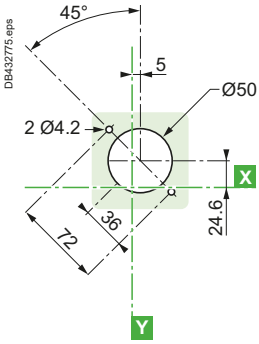

GV5P/GV6P

MCC type direct rotary handle

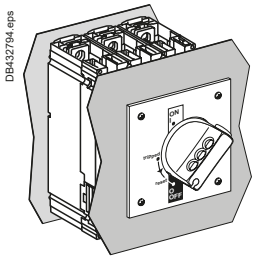

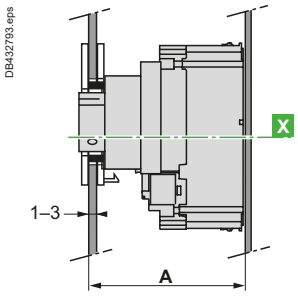

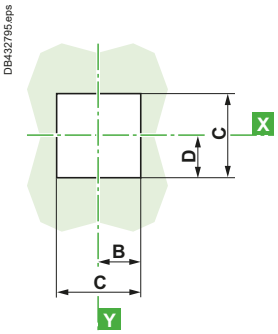

	A	B	C	D
150/220 A	125 ±2	50	100	41
320/500 A	149 ±2	72.5	145	51

Ref.
Motor circuit breakers

Dimensions and mounting

GV5P

Combination of GV5P and contactor LC1F●●●/LC1D●●● with kit GV7AC0●

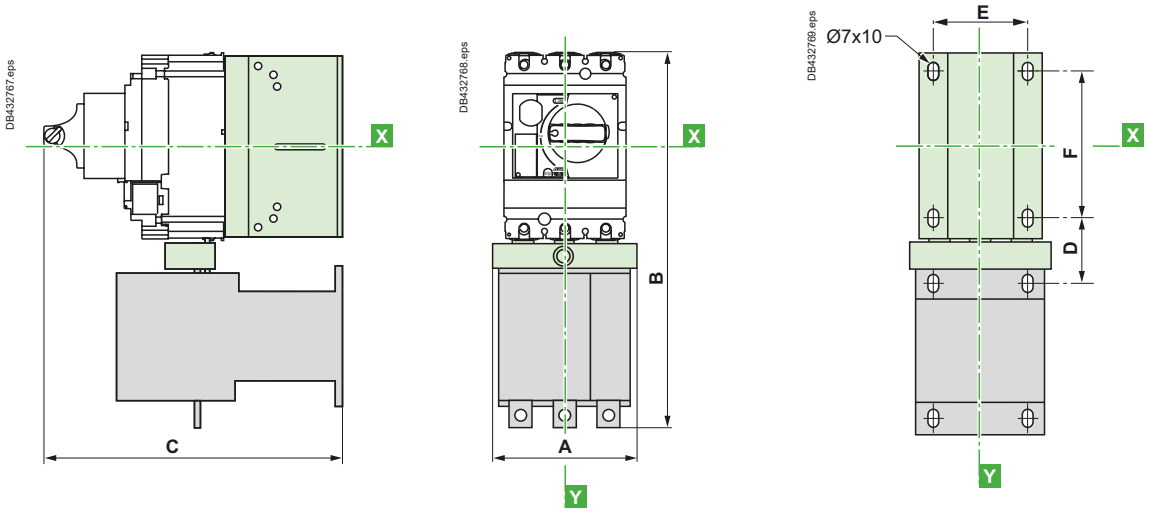

	A	B	C	D	E	F
GV5P + LC1F115 + GV7AC06	119	334	243	44	85	120
GV5P + LC1F150 + GV7AC06	119	334	243	46	85	120
GV5P + LC1F185 + GV7AC06	119	338	249	48	85	120
GV5P + LC1D115 + GV7AC08	120	332	205	48	85	120
GV5P + LC1D150 + GV7AC08	120	332	205	48	85	120

Minimum distance between 2 circuit breakers mounted side by side = 0

GV5P/GV6P

With additional PowerTag

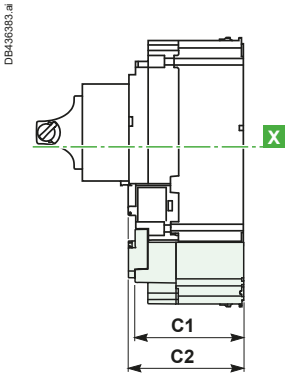

Type	C1	C2
GV5P	81	86
GV6P	95.5	110

GV5P with LV434020 / Panel mounting

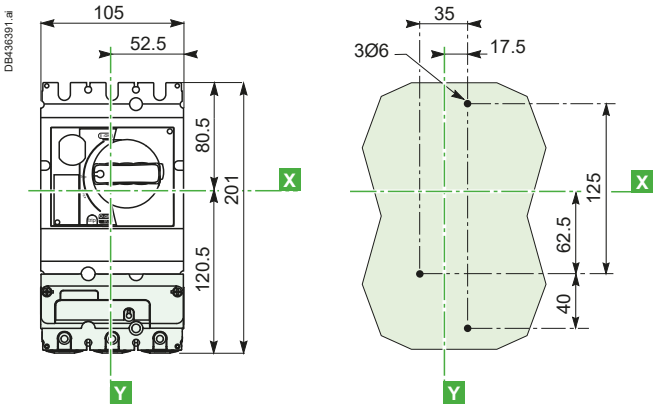

GV6P with LV434022 / Panel mounting

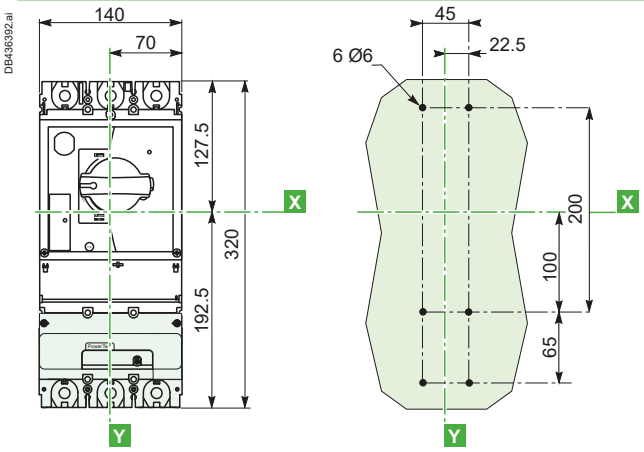

Life Is On Schneider Electric

Dimensions and mounting

GV5P/GV6P

Front connection without accessories

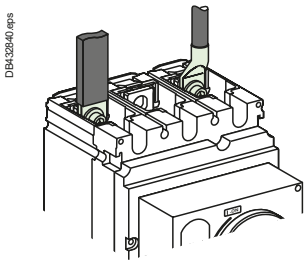

GV5P — Cables with lugs bars

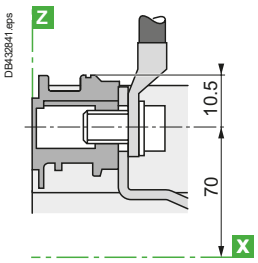

GV6P — Bars/cables with lugs

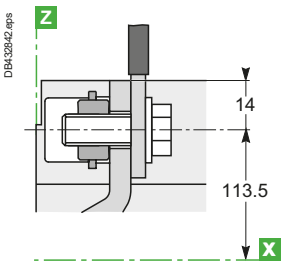

GV5P

Bare-cables connectors

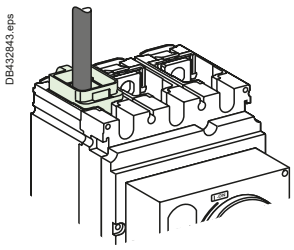

GV7AC021/LV429227/GV7AC022

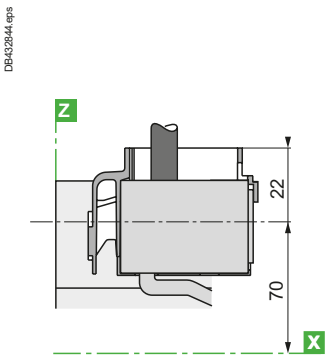

LV429244

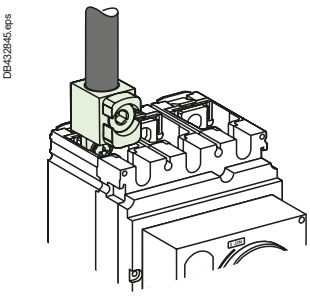

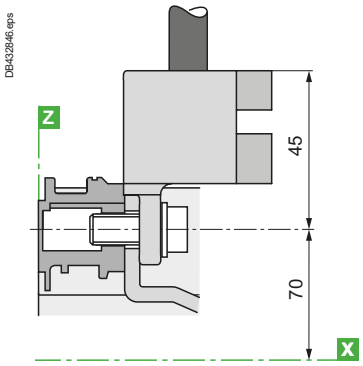

GV6P

Bare-cables connectors

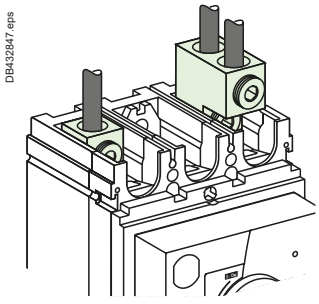

LV432479

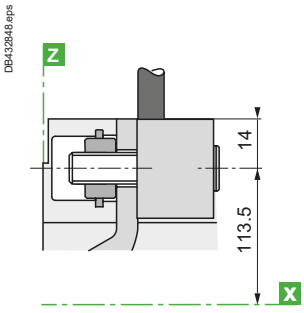

LV432481

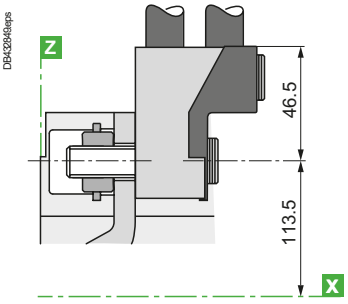

GV5P/GV6P

Spreaders

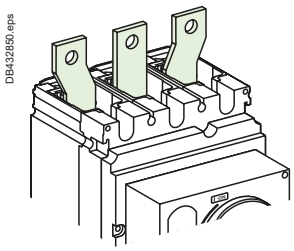

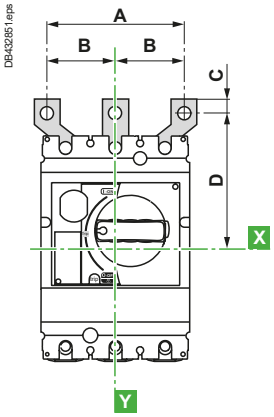

Type	A	B	C	D
GV5P/ Spreaders GV7AC03	114	45	11	100
GV6P/ Spreaders LV432490	135	52.5	15	152.5
GV6P/ Spreaders LV432492	170	70	15	166

Schemes

Schemes

Motor circuit breakers

GV5P/ 6P

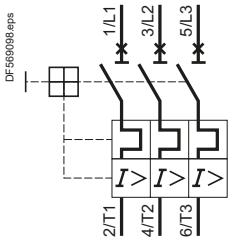

Add-on auxiliary contacts according to their location (1)

29450, 29452

Location 1 C/O contact	Location 2 Trip indication	Location 3 Electrical fault indication (2)	Location 4 C/O contact
			

A self-adhesive label, supplied with the contact, can be affixed to the front face of the circuit-breaker to allow personalised marking according to the function of the contact or contacts.

(1) See pages B6/52 to B6/54.
*(2) Adapter **LV429451** is mandatory for electrical trip indication in GV5.*

Electric trips

LV42940●

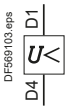

LV42938●

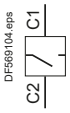

Thermal fault module LV429424

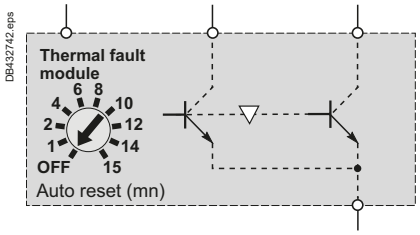

Recommended application schemes for LV429424

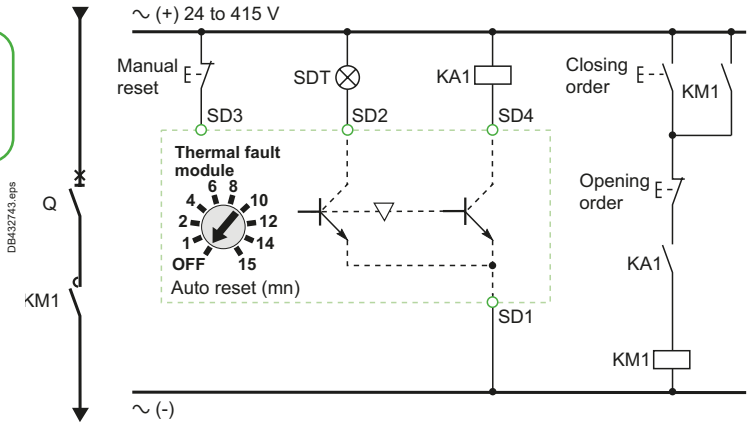

SD1, **SD3:** thermal fault module input power supply
SD2: over-load fault signal output. This output will stay-put until reset
SD4: contactor control output
SD2 and SD4: Static outputs: 24 to 415 V AC / V DC; 80 mA max
KM1: LC1D or LC1F contactor
KA1: CA2 or CAD type control relays

Terminals shown in green **O** must be connected by customer.

Ref.
Motor circuit breakers

PowerLogic™ Energy measurement solutions






Characteristics

Energy measurement – PowerLogic

PowerTag Energy Flex 63 A (F63)

Main characteristics

Rated voltage	3P	Un	Phase-to-phase	**V**	380… 415 V AC ± 20 %
	3P+N	Un	Phase-to-neutral	**V**	220… 240 V AC ± 20 %
			Phase-to-phase	**V**	380… 415 V AC ± 20 %
Frequency				**Hz**	50/60
Maximum current		Imax		**A**	63
Basic current		Ib		**A**	10
Saturation current				**A**	130
Maximum consumption			3P/3P+N	**VA**	≤ 2
Starting current		Ist		**mA**	40

Additional characteristics

Operating temperature		**°C**	-25 to +60
Storage temperature		**°C**	-40 to +85
Overvoltage category	As per IEC 61010-1		Cat. III
Measuring category	As per IEC 61010-2-030		Cat. III
Pollution degree			3
Altitude		**m**	≤ 2000
Degree of protection	Device only		IP20
	IK		05

Radio-frequency communication

ISM band 2.4 GHz		**GHz**	2.4 to 2.4835
Channels	As per IEEE 802.15.4		11 to 26
Isotropic Radiated Power	Equivalent (EIRP)	**dBm**	0
Maximum transmission time		**ms**	< 5
Channel occupancy	Messages sent every	**s**	5 minimum

Characteristics of measuring functions

Function	Symbol	Performance category as per IEC 61557-12 (PMD-I/DD/K55/1)	Measuring range
		Class	
Active power	P	1	9 W to 63 kW
Active energy	Ea	1	Total and partial 0 to 99999999.9 kWh
Current	I	1	40 mA to 63 A
Voltage	U	0.5	Un ± 20 %
Power factor	PFA	1	0 to 1

Dimensions

A9MEM1573



A9MEM1570



3P

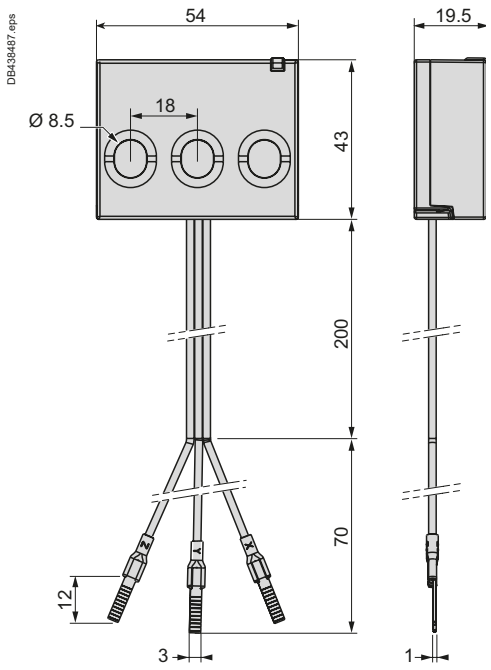

3P + N

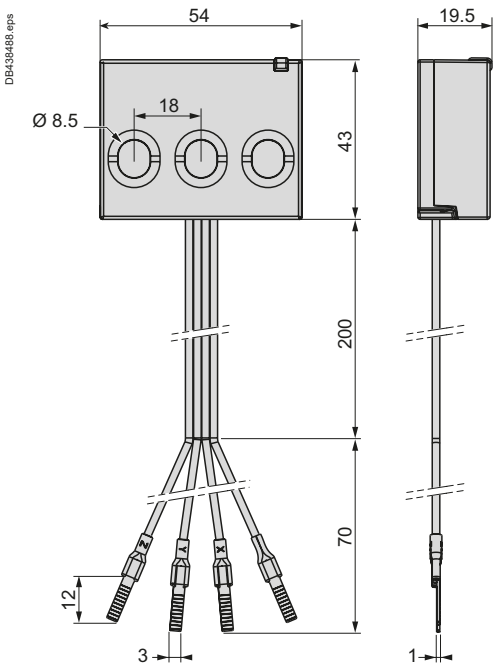

References:
page B6/59

Characteristics

Energy measurement – PowerLogic

PowerTag Energy Flex 160 A (F160)

Main characteristics (as per IEC 61557-12)

Rated voltage	Un	Phase-to-neutral	**V**	100...277 V AC ± 20 %
		Phase-to-phase		173...480 V AC ± 20 %
Frequency			**Hz**	50/60
Maximum current	Imax		**A**	160
Maximum operating current				1.2 x Imax
Saturation current				2 x Imax
Maximum consumption			**VA**	3
Starting current	Ist		**mA**	100
Basic current	Ib		**A**	25

Additional characteristic

Operating temperature		**°C**	-25 to +70
Storage temperature		**°C**	-40 to +85
Overvoltage category	As per IEC 61010-1		Cat. IV
Measuring category	As per IEC 61010-2-030		Cat. IV
Pollution degree			3
Altitude		**m**	Up to 2000 without derating (1)
Degree of protection device			IP20
			IK05

Radio-frequency communication

ISM band 2.4 GHz		**GHz**	2.4 to 2.4835
Channels	As per IEEE 802.15.4		11 to 26
Isotropic Radiated Power	Equivalent (EIRP)	**dBm**	0
Maximum transmission time		**ms**	< 5
Channel occupancy	For 1 device	**s**	messages sent every 5

Characteristics of measuring functions

Function	Symbol	Performance category as per IEC 61557-12 (PMD-II/DD/K70/1)		Measuring range
		Class	Measuring range	
Total active power (Active power per phase)	P	1	2.5 to 160 A	24 W (8 W) to 192 kW
Total reactive power (Reactive power per phase)	Q_A	2		30 VAR (10 VAR) to 192 kVAR
Total apparent power (Apparent power per phase)	S_A	2		38 VA (13 VA) to 192 kVA
Active Energy: per phase, total, partial, delivered and received	E_a	1		0 to 281.10^9 kWh
Reactive energy: per phase, total, partial, delivered and received	E_{rA}	2		0 to 281.10^9 kVARh
Apparent energy: per phase, total, partial	E_{apA}	2		0 to 281.10^9 kVAh
Frequency	f	1	50 / 60 Hz ± 2 %	45 to 65 Hz
Phase current	I	1	5 to 160 A	100 mA to 320 A
Neutral current	I_{NC}	2		
Voltages (Line to Line)	U	0.5	Un ± 20 %	138 to 576 V AC
Power factor (per phase, total)	PF_A	1	From 0.5 inductive to 0.8 capacitive	-1 to 1

(1) Above 2000 m, please consult us.

Dimensions

PowerTag Energy Flex 160 A

PB121658.eps

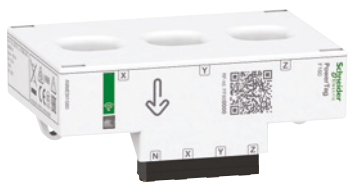

DB438489.eps

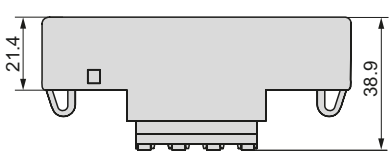

DB438490.eps

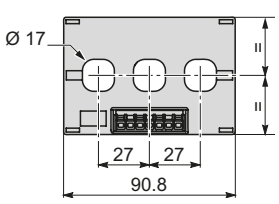

References:
page B6/60

Characteristics

Energy measurement – PowerLogic

PowerTag Energy Monoconnect 250 A, 630 A

Main characteristics

Rated voltage	Un	Phase-to-neutral	**V**	230 V AC ± 20 %
		Phase-to-phase	**V**	400 V AC ± 20 %
Frequency			**Hz**	50/60
Maximum current	Imax		**A**	250/630
Maximum operating current				1.2 x Imax
Saturation current				2 x Imax
Maximum consumption			**VA**	3.7
Starting current	Ist		**mA**	160/400
Basic current	Ib		**A**	40/100

Additional characteristic

Operating temperature		**°C**	-25 to +70
Storage temperature		**°C**	-50 to +85
Overvoltage category	As per IEC 61010-1		Cat. IV
Measuring category	As per IEC 61010-2-030		Cat. III
Pollution degree			3
Altitude			Up to 2000 m without derating (1)
Degree of protection device			IP20
			IK07

Radio-frequency communication

ISM band 2.4 GHz		**GHz**	2.4 to 2.4835
Channels	As per IEEE 802.15.4		11 to 26
Isotropic Radiated Power	Equivalent (EIRP)	**dBm**	0
Maximum transmission time		**ms**	< 5
Channel occupancy	For 1 device	**s**	messages sent every 5

Characteristics of measuring functions

Function	Symbol	Performance category as per IEC 61557-12 (PMD-II/DD/K70/1)		Measuring range (250 A / 630 A)
		Class	Measuring range	
Total active power (Active power per phase)	P	1	4 to 250 A / 10 to 630 A	88 W (29 W) to 416 kW / 222 W (74 W) to 1048 kW
Total reactive power (Reactive power per phase)	Q_A	2		88 VAR to 416 kVAR / 221 VAR to 1048 kVAR
Total apparent power (Apparent power per phase)	S_A	2		88 VA to 416 kVA / 221 VA to 1048 kVA
Active Energy: per phase, total, partial, delivered and received	E_a	1		0 to 281.109 kWh
Reactive energy: per phase, total, partial, delivered and received	E_{rA}	2		0 to 281.109 kVARh
Frequency	f	1	45 to 55 Hz	45 to 65 Hz
Phase current	I	1	8 to 250 A / 20 to 630 A	160 mA to 500 A / 400 mA to 1260 A
Voltages (Line to Line)	U	0.5	Un ± 20 %	320 to 480 V AC
Power factor	PF_A	1	From 0.5 inductive to 0.8 capacitive	-1 to 1

(1) Above 2000 m, please consult us.

Dimensions

GV5P with LV434020 / Panel mounting

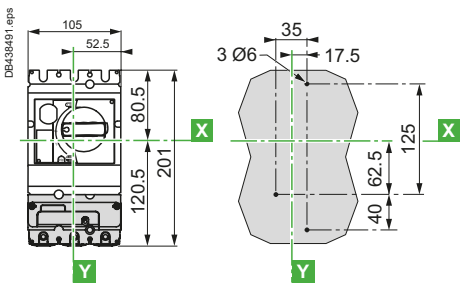

GV6P with LV434022 / Panel mounting

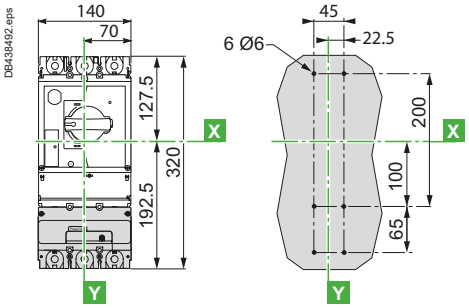

With additional PowerTag

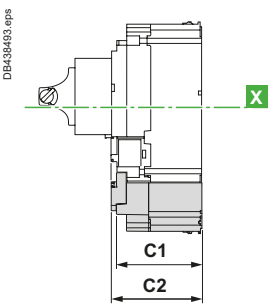

Type	C1	C2
GV5P	81	86
GV6P	95.5	110

References:
page B6/61

Characteristics

Energy measurement – PowerLogic

PowerTag Link

Main characteristics

Supply voltage	Us	**V**	110/230 V AC ± 20 %, 2 A
Frequency		**Hz**	50/60
Power consumption		**VA**	5
Communication interface			Ethernet 10/100 BASE-T, Cable length ≤ 100 m Cat.6 STP
Wireless communication			Up to 20 or 100 PowerTag Energy sensors
Integrated connection type			DHCP client (Ethernet port)
Local indication	Product state		Green, orange and red LED
	Ethernet state (LAN ST)		Green, orange and red LED
Overvoltage category			III
Radio-frequency communication	ISM band 2.4 GHz	**GHz**	2.4 to 2.4835
Degree of protection (IEC 60529)	Device only		IP20
	Device in modular enclosure		IP40 Insulation class II
Fire resistance			650 °C, 30 s
Environment			In compliance with the RoHS directive REACH Regulations

Additional characteristics

Operating temperature		**°C**	-25 to +60
Storage temperature		**°C**	-40 to +85
Pollution degree			2
Tropicalization (IEC 60068-2-30)			Treatment 2 (relative humidity of 93 % at 40°C)
Operating altitude		**m**	0 to 2000
Electromagnetic compatibility	Reference standards		
	Immunity		EN 55035
	Emissions		EN 55032
	Electromagnetic compatibility and Radio spectrum Matters (ERM)		EN 300328 EN 301489-1 EN 301489-17

Dimensions

PowerTag Link

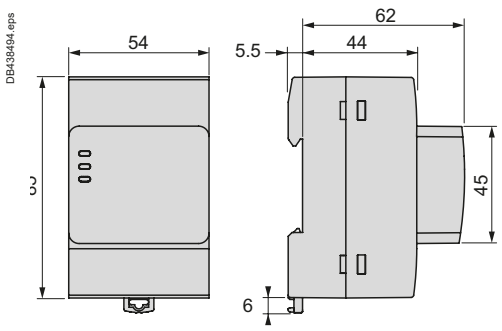

References:
page B6/62

TeSys Modular circuit breakers

0.5 to 20 A

(for equipment and control circuits)



Characteristics

Environment

Circuit breaker type			GB2CB	GB2CD	GB2DB	GB2CS
Conforming to standards			IEC 60947-1, 947-2, EN 60947-1, 60947-2			
Product certifications			cCSAus (1)	cCSAus (1)	–	–
Degree of protection	Conforming to IEC 60529		IP 20			
Shock resistance	Conforming to IEC 60068-2-27		22 gn for 20 ms			
Vibration resistance	Conforming to IEC 60068-2-6		5 gn (5…110 Hz)			
Ambient air temperature around the device	Storage	°C	-40…+80			
	Operation	°C	-20…+60			
Flame resistance	Conforming to IEC 60695-2-11	°C	960			
Maximum operating altitude		m	3000			
Operating position	In relation to normal vertical mounting plane		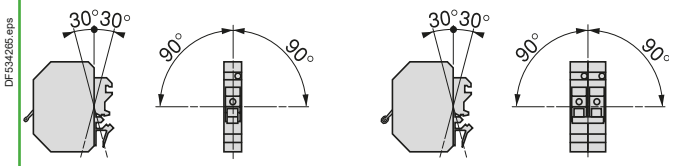			
			GB2CB,CD, CS		GB2DB	

Cabling			Minimum c.s.a.	Maximum c.s.a.
	Solid cable	mm^2	1 x 0.75	1 x 6 or 2 x 4
	Flexible cable with cable end	mm^2	1 x 0.75	1 x 4 or 2 x 2.5
Tightening torque		N.m	1.2	

Technical characteristics

Utilisation category	Conforming to IEC 60947-2		A		A		A		A	
Rated operational voltage (Ue)	Conforming to IEC 60947-2	V	250 (2)		250		415		250 (2)	
	Conforming to CSA C22-2 Nr 14 and UL 1077	V	277		277		–		–	
Rated operational frequency	Conforming to IEC 60947-2	Hz	50/60		50/60		50/60		50/60	
Rated impulse withstand voltage (U imp)	Conforming to IEC 60947-2	kV	4		4		4		4	
Total power dissipated per pole		W	2		2		2		1.9	
Mechanical and electrical durability	C.O.: Closing - Opening	C.O.	8000		8000		8000		8000	
Operational current correction coefficient (a or ⎓)	According to the permissible ambient temperature	°C	-20	-10	0	+10	+20	+30	+40	+50	+60
	Correction coefficient		1.2	1.15	1.1	1.05	1	0.95	0.90	0.85	0.80
Tripping threshold	Of the magnetic trips		12…16 In		12…16 In		12…16 In		5…7 In	

*(1) Except for **GB2CB16**, **GB2CB22**, **GB2CD16**, **GB2CD22**.*
*(2) Ue = 415 V when a **GB2** circuit breaker is fitted on every live conductor.*

Tripping curves

Average operating time at 20 °C without prior current flow (cold state)

GB2CB, GB2CD, GB2 DB

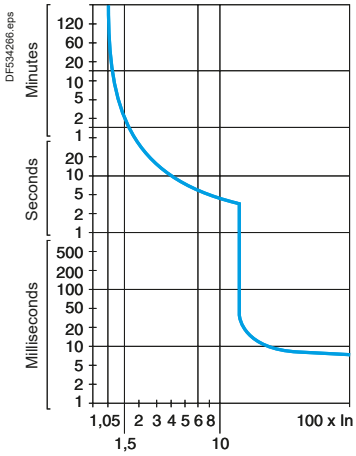

GB2CS

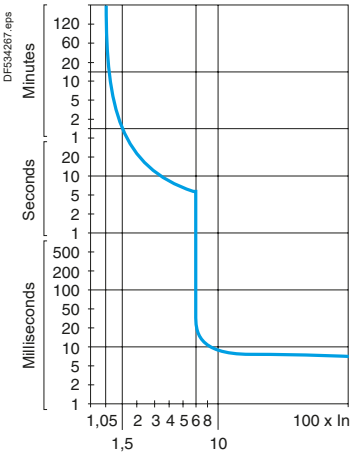

References:
pages B6/65 and B6/66
Dimensions:
page B6/163
Schemes:
page B6/163

Characteristics

Circuit breaker type				GB2											
				CB05	CB06	CB07	CB08	CB09	CB10	CB12	CB14	CB16	CB20	CB21	CB22
Rating			A	0.5	1	2	3	4	5	6	8	10	12	16	20
Breaking capacity conforming to IEC 60947-2 ∿ 50/60 Hz	110 V	Icu	kA	50	50	15	10	6	3	3	3	2	2	2	2
		Ics % (1)		100	50	50	50	50	75	75	75	75	75	75	75
	230/240 V	Icu	kA	50	50	15	3	3	2	1.5	1.5	1.5	1.5	1.5	1.5
		Ics % (1)		25	25	25	50	50	75	75	75	75	75	75	75
Associated fuses, if required if Isc > breaking capacity Icu conforming to IEC 60947-2	110 V	aM	A	★	★	20	25	25	40	40	50	50	63	63	63
		gG	A	★	★	25	32	32	50	50	63	63	80	80	80
	230/240 V	aM	A	★	★	16	20	20	32	32	40	40	50	50	50
		gG	A	★	★	25	32	32	40	40	50	50	63	63	63

Circuit breaker type				GB2											
				CD05	CD06	CD07	CD08	CD09	CD10	CD12	CD14	CD16	CD20	CD21	CD22
Rating			A	0.5	1	2	3	4	5	6	8	10	12	16	20
Breaking capacity conforming to IEC 60947-2 ∿ 50/60 Hz	110 V	Icu	kA	50	50	15	10	6	3	3	3	2	2	2	2
		Ics % (1)		100	50	50	50	50	75	75	75	75	75	75	75
	230/240 V	Icu	kA	50	50	15	3	3	2	1.5	1.5	1.5	1.5	1.5	1.5
		Ics % (1)		25	25	25	50	50	75	75	75	75	75	75	75
Associated fuses, if required if Isc > breaking capacity Icu conforming to IEC 60947-2	110 V	aM	A	★	★	20	25	25	40	40	50	50	63	63	63
		gG	A	★	★	25	32	32	50	50	63	63	80	80	80
	230/240 V	aM	A	★	★	16	20	20	32	32	40	40	50	50	50
		gG	A	★	★	25	32	32	40	40	50	50	63	63	63

Circuit breaker type				GB2											
				DB05	DB06	DB07	DB08	DB09	DB10	DB12	DB14	DB16	DB20	DB21	DB22
Rating			A	0.5	1	2	3	4	5	6	8	10	12	16	20
Breaking capacity conforming to IEC 60947-2 ∿ 50/60 Hz	110 V	Icu	kA	50	50	15	10	6	3	3	3	2	2	2	2
		Ics % (1)		100	50	50	50	50	75	75	75	75	75	75	75
	230/240 V	Icu	kA	50	50	15	3	3	2	1.5	1.5	1.5	1.5	1.5	1.5
		Ics % (1)		25	25	25	50	50	75	75	75	75	75	75	75
	400/415 V	Icu	kA	50	50	15	3	3	2	1.5	1.5	1.5	1.5	1.5	1.5
		Ics % (1)		25	25	25	50	50	75	75	75	75	75	75	75
Associated fuses, if required if Isc > breaking capacity Icu conforming to IEC 60947-2	110 V	aM	A	★	★	20	25	25	40	40	50	50	63	63	63
		gG	A	★	★	25	32	32	50	50	63	63	80	80	80
	230/240 V	aM	A	★	★	16	20	20	32	32	40	40	50	50	50
		gG	A	★	★	25	32	32	40	40	50	50	63	63	63
	400/415 V	aM	A	★	★	16	20	20	32	32	40	40	50	50	50
		gG	A	★	★	25	32	32	40	40	50	50	63	63	63

(1) As % of Icu.
★ *Fuse not required. Breaking capacity Icu > Isc.*

References:
pages B6/65 and B6/66
Dimensions:
page B6/163
Schemes:
page B6/163

Characteristics

Circuit breaker type				GB2											
				●●05	●●06	●●07	●●08	●●09	●●10	●●12	●●14	●●16	●●20	●●21	●●22
Breaking capacity (Icu) conforming to IEC 60947-2 ⎓		24 V	**kA**	1.5	1.5	1.5	1.5	1.5	1.5	1.5	1.5	1.5	1.5	1.5	1.5
		48 V	**kA**	1	1	1	1	1	1	1	1	–	–	–	–
Operational current conforming to IEC 60947-5-1 ⎓	DC-12	24 V	**A**	0.5	1	2	3	4	5	6	8	10	12	16	20
		48 V	**A**	0.5	1	2	3	4	5	6	8	10	12	16	20
	DC-13	24 V	**A**	0.5	1	2	3	4	5	6	8	10	12	16	20
		48 V	**A**	0.5	1	2	3	4	5	6	8	–	–	–	–

Circuit breaker type				GB2	
				CS05	CS06
Rating			**A**	0.5	1
Breaking capacity conforming to IEC 60947-2 ∿ 50/60 Hz	110 V	Icu	**kA**	50	50
		Ics % (1)		100	100
	230/240 V	Icu	**kA**	50	50
		Ics % (1)		25	25
	400/415 V (2)	Icu	**kA**	50	50
		Ics % (1)		25	25
Breaking capacity (Icu) conforming to IEC 60947-2 ⎓		24 V	**kA**	1.5	1.5
		48 V	**kA**	1	1
Operational current conforming to IEC 60947-5-1 ⎓	DC-12	24 V	**A**	0.5	1
		48 V	**A**	0.5	1
	DC-13	24 V	**A**	0.5	1
		48 V	**A**	0.5	1

Maximum permissible line length for star-delta starting (length of cable containing 2 or more conductors)	With contactors LC●D09 …D18	Operational voltage		**V**	**48**	**110**	**230**	**48**	**110**	**230**
		C.s.a.	0.60 mm²	**m**	(3)	31	365	6	85	230
			0.75 mm²	**m**	(3)	39	460	8	110	290
			1 mm²	**m**	(3)	52	610	10	145	380
			1.5 mm²	**m**	(3)	78	910	15	220	570
			2.5 mm²	**m**	(3)	130	1520	26	360	950
			4 mm²	**m**	(3)	200	2400	41	580	1500
	With contactors LC●D25…D32	Operational voltage		**V**	**48**	**110**	**230**	**48**	**110**	**230**
		C.s.a.	0.60 mm²	**m**	(3)	(3)	230	(3)	56	230
			0.75 mm²	**m**	(3)	(3)	290	(3)	70	290
			1 mm²	**m**	(3)	(3)	390	(3)	95	380
			1.5 mm²	**m**	(3)	(3)	580	(3)	140	570
			2.5 mm²	**m**	(3)	(3)	970	(3)	230	950
			4 mm²	**m**	(3)	(3)	1500	(3)	375	1500
	With contactors LC●D40…D80	Operational voltage		**V**	**48**	**110**	**230**	**48**	**110**	**230**
		C.s.a.	0.60 mm²	**m**	(3)	(3)	46	(3)	13	100
			0.75 mm²	**m**	(3)	(3)	60	(3)	17	130
			1 mm²	**m**	(3)	(3)	80	(3)	22	170
			1.5 mm²	**m**	(3)	(3)	120	(3)	34	250
			2.5 mm²	**m**	(3)	(3)	190	(3)	56	420
			4 mm²	**m**	(3)	(3)	310	(3)	90	680

(1) As % of Icu.
*(2) One **GB2CS** circuit breaker on each live conductor.*
(3) Use relays.

Ref.
Motor circuit breakers

References: pages B6/65 and B6/66
Dimensions: page B6/163
Schemes: page B6/163

Dimensions and schemes

Dimensions

GB2CB●●, GB2CD●●, GB2CS●●

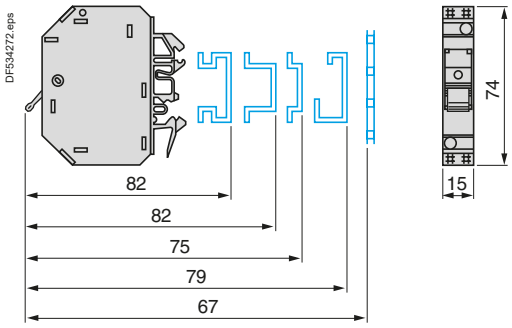

GB2DB●●

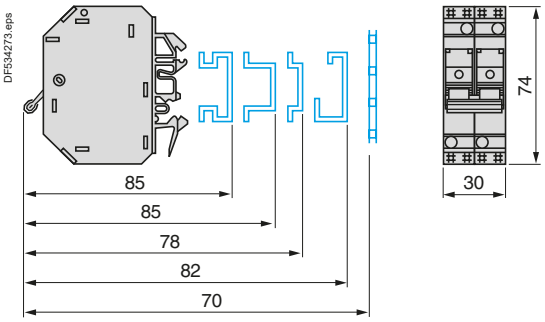

Marking: up to twelve AB1 R clip-in markers.

Schemes

GB2CB●●

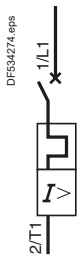

GB2CD●●

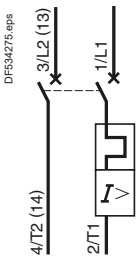

GB2DB●●

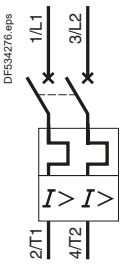

GB2CS●●

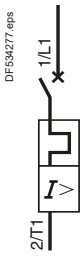

References:
pages B6/65 and B6/66

Characteristics:
pages B6/160 to B6/162

TeSys Control
SK, K, Deca Control relays

Chapter B7

TeSys SK, K Relays

Product		Pages
Mini relays - 2 contacts, simultaneous action TeSys SK, SKE		B7/2
Relays - 4 contacts, simultaneous action TeSys K		B7/4
Auxiliary contact blocks, accessories TeSys K		B7/6

TeSys Deca Relays

Relays 5 contacts, simultaneous action		B7/8
TeSys Deca Accessories		B7/10

Technical Data for Designers B7/13

PB121522.tif



CA2SK11●●

Mini control relays

- Width of mini control relays 27 mm.
- Mounting on 35 mm ⎓ rail.
- Connection by connectors.

Control circuit supply	Auxiliary contacts		Basic reference, to be completed by adding the voltage code (1)
a.c. supply	2	–	**CA2SK20●●**
	1	1	**CA2SK11●●**
d.c. supply	2	–	**CA3SK20●●**
	1	1	**CA3SK11●●**

PB121523.eps



CA2SKE20●●

Mini control relay with alternating contacts

This mini control relay with alternating contacts (see function diagram page B7/17) makes it possible to automatically split the operating time between 2 circuits of a redundant system.
By regularly energising the “safety circuits”, this device makes it possible to ensure that they are operating correctly.

- Width of mini control relay 45 mm.
- Fixing by Ø4 screws.
- Connection by connectors.
- Cannot be fitted with front-mounted auxiliary contact block.
- Cannot be fitted with coil suppressor module.

Control circuit supply	Auxiliary contacts		Basic reference, to be completed by adding the voltage code (1)
a.c. supply	2	–	**CA2SKE20●●**

(1) Standard control circuit voltages (for other voltages, please consult your Regional Sales Office):

Mini control relays CA2SK and CA2SKE									
Volts ∼ 50/60 Hz	**24**	**48**	**110**	**120**	**220**	**230**	**240**	**380**	**400**
Code	B7	E7	F7	G7	M7	P7	U7	Q7	V7
Mini control relays CA3SK									
Volts ⎓	**12**	**24**	**36**	**48**	**72**				
Code	JD	BD	CD	ED	SD				

Control relays

Product references

PB111639_R.eps



LA1SK●●

Instantaneous auxiliary contact blocks

Clip-on front mounting

For use on control relays	Maximum number of blocks per contactor	Composition		Reference
CA2SK20	1	2	–	**LA1SK20**
		–	2	**LA1SK02**
		1	1	**LA1SK11**

PB111640_R.eps



LA4SK●1●

Suppressor modules

Connection without need for tools by clipping onto right-hand side of contactor

For use on control relays	Type	For voltages	Sold in lots of	Unit reference
CA2SK and **CA3SK**	Varistor (1)	∿ and ⎓ 24 V…48 V	10	**LA4SKE1E**
		∿ and ⎓ 110 V…250 V	10	**LA4SKE1U**
	Diode (2)	⎓ 24 V…250 V	10	**LA4SKC1U**

(1) Protection provided by limiting the transient voltage to 2 Uc max.
Maximum reduction of transient voltage peaks.
Slight increase in drop-out time (1.1 to 1.5 times the normal time).
(2) No overvoltage or oscillating frequency.
Slight increase in drop-out time (1.1 to 1.5 times the normal time).

Characteristics: page B7/15
Dimensions: page B7/16
Schemes: page B7/17

PB123768.eps



CA2KN22●●

Control relays for a.c. control circuit

- Mounting on 35 mm ⎓ rail or Ø4 screw fixing.
- Screws in the open "ready-to-tighten" position.

Control circuit Consumption	Auxiliary contacts		Basic reference, to be completed by adding the voltage code (1)
Screw clamp connections			
4.5 VA	4	–	**CA2KN40●●**
	3	1	**CA2KN31●●**
	2	2	**CA2KN22●●**
Spring terminal connections			
4.5 VA	4	–	**CA2KN403●●**
	3	1	**CA2KN313●●**
	2	2	**CA2KN223●●**
Faston connectors, 1 x 6.35 or 2 x 2.8			
4.5 VA	4	–	**CA2KN407●●**
	3	1	**CA2KN317●●**
	2	2	**CA2KN227●●**
Solder pins for printed circuit boards			
4.5 VA	4	–	**CA2KN405●●**
	3	1	**CA2KN315●●**
	2	2	**CA2KN225●●**

PB123769.tif



CA2KN●●5●●

Control relays for d.c. control circuit

- Mounting on 35 mm ⎓ rail or Ø4 screw fixing.
- Screws in the open "ready-to-tighten" position.

Screw clamp connections			
3 W	4	–	**CA3KN40●●**
	3	1	**CA3KN31●●**
	2	2	**CA3KN22●●**
Spring terminal connections			
3 W	4	–	**CA3KN403●●**
	3	1	**CA3KN313●●**
	2	2	**CA3KN223●●**
Solder pins for printed circuit boards			
3 W	4	–	**CA3KN405●●**
	3	1	**CA3KN315●●**
	2	2	**CA3KN225●●**

PB123770.tif



CA3KN●●3●●

(1) Please check the availability of your variant in the index page B7/12. The SEARCH function of your viewer can be used.

Standard control circuit voltages (for other voltages, please consult your Regional Sales Office):

Control relays CA2K (0.8...1.15 Uc) *(0.85...1.1 Uc)*

Volts ∼ 50/60 Hz	**12**	**20**	**24(2)**	**36**	**42**	**48**	**110**	**115**	**127**	**220/ 230**	**230**	**230/ 240**	**380/ 400**	**400**	**400/ 415**	**440**	**500**	**660/ 690**
Code	J7	Z7	B7	C7	D7	E7	F7	FE7	FC7	M7	P7	U7	Q7	V7	N7	R7	S7	Y7

Up to and including 240 V, coil with integral suppression device available: add **2** to the code required. Example: **J72**

Control relays CA3K (0.8...1.15 Uc)

Volts ⎓	**12**	**20**	**24(2)**	**36**	**48**	**60**	**72**	**100**	**110**	**125**	**200**	**220**	**230**	**240**	**250**
Code	JD	ZD	BD	CD	ED	ND	SD	KD	FD	GD	LD	MD	MPD	MUD	UD

Coil with integral suppression device available: add **3** to the code required. Example: **JD3**.

(2) When connecting an electronic sensor or timer in series with the coil of the control relay, select a 20 V coil (∼ code Z7, ⎓ code ZD) so as to compensate for the incurred voltage drop.

Characteristics: pages B7/18 and B7/19
Dimensions: page B7/20
Schemes: page B7/21

PB123771.eps



CA4KN40●●●

Low consumption control relays d.c. control circuit

- Mounting on 35 mm ⎓ rail or Ø4 screw fixing.
- Screws in the open "ready-to-tighten" position.

Control circuit Consumption	Auxiliary contacts		Basic reference, to be completed by adding the voltage code (1)
Screw clamp connections			
1.8 W	4	–	**CA4KN40●●**
	3	1	**CA4KN31●●**
	2	2	**CA4KN22●●**
Spring terminal connections			
1.8 W	4	–	**CA4KN403●●**
	3	1	**CA4KN313●●**
	2	2	**CA4KN223●●**
Faston connectors, 1 x 6.35 or 2 x 2.8			
1.8 W	4	–	**CA4KN407●●**
	3	1	**CA4KN317●●**
	2	2	**CA4KN227●●**
Solder pins for printed circuit boards			
1.8 W	4	–	**CA4KN405●●**
	3	1	**CA4KN315●●**
	2	2	**CA4KN225●●**

(1) Please check the availability of your variant in the index page B7/12. The SEARCH function of your viewer can be used.

Standard control circuit voltages (for other voltages, please consult your Regional Sales Office):

Control relays CA4K (Wide range coil: 0.7...1.3 Uc)

Volts ⎓	**12**	**20**	**24**	**48**	**72**	**110**	**120**
Code	JW3	ZW3	BW3	EW3	SW3	FW3	GW3

Coil with integral suppression device fitted as standard, by bi-directional peak limiting diode.

Control relays

Characteristics: pages B7/18 and B7/19
Dimensions: page B7/20
Schemes: page B7/21

Product references

PB121750.tif



LA1KN22

PB123795.eps



LA1KN●●3

PB123796.eps



LA1KN●●7

Instantaneous auxiliary contact blocks

Clip-on front mounting, 1 per control relay

Connection	Composition		Reference
Screw clamp terminals	2	–	**LA1KN20**
	–	2	**LA1KN02**
	1	1	**LA1KN11**
	4	–	**LA1KN40** (1)
	3	1	**LA1KN31** (1)
	2	2	**LA1KN22** (1)
	1	3	**LA1KN13** (1)
	–	4	**LA1KN04** (1)
Spring terminals	2	–	**LA1KN203**
	–	2	**LA1KN023**
	1	1	**LA1KN113**
	4	–	**LA1KN403** (1)
	3	1	**LA1KN313** (1)
	2	2	**LA1KN223** (1)
	1	3	**LA1KN133** (1)
	–	4	**LA1KN043** (1)
Faston connectors 1 x 6.35 or 2 x 2.8	2	–	**LA1KN207**
	4	–	**LA1KN407** (1)
	3	1	**LA1KN317** (1)

Electronic time delay contact blocks

- Relay output with common point changeover contact, ∿ or ⎓ 240 V, 2 A maximum
- Control voltage 0.85...1.1 Uc
- Maximum switching capacity 250 VA or 150 W
- Operating temperature -10...+ 60 °C
- Reset time: 1.5 s during the time delay period 0.5 s after the time delay period

Clip-on front mounting, 1 per control relay

Voltage	Type	Timing range	Composition	Reference
V		s		
∿ or ⎓ 24...48	On-delay	1...30	1	**LA2KT2E**
∿ 110...240	On-delay	1...30	1	**LA2KT2U**

Other versions Electronic timers type RE4.
Please consult your Regional Sales Office.

*(1) Block of 4 contacts for use on **CA2K** and **CA3K**.*

PB123797.eps



LA2KT2E

Control relays

Characteristics: page B7/19
Dimensions: page B7/20
Schemes: page B7/21

Product references

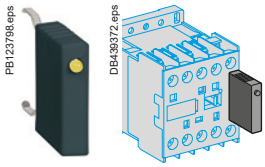

LA4KC1B

Suppressor modules incorporating LED indicator

Mounting and connection	Type	For voltages	Sold in lots of	Unit reference
Clips onto front of relay with locating device. No tools required.	Varistor (1)	∿ and ⎓ 12...24 V	5	**LA4KE1B**
		∿ and ⎓ 32...48 V	5	**LA4KE1E**
		∿ and ⎓ 50...129 V	5	**LA4KE1FC**
		∿ and ⎓ 130...250 V	5	**LA4KE1UG**
	Diode + Zener diode (2)	⎓ 12...24 V	5	**LA4KC1B**
		⎓ 32...48 V	5	**LA4KC1E**
	RC (3)	∿ 110...250 V	5	**LA4KA1U**

Mounting accessories

Description	Application		Sold in lots of	Unit reference
Mounting plates	On 2 ⊔ rails	110/120 mm fixing centres	10	**DX1AP25**

Marking accessories

Description	Application		Sold in lots of	Unit reference
Marker holder	Clip-on fixing on front face	–	100	**LA9D90**
Clip-in markers	4 maximum per relay	Strips of 10 identical numbers 0 to 9	25	**AB1R●** (4)
		Strips of 10 identical capital letters A to Z	25	**AB1G●** (4)



LA9D90



AB1R9

(1) Protection provided by limiting the transient voltage to 2 Uc max.
Maximum reduction of transient voltage peaks.
Slight increase in drop-out time (1.1 to 1.5 times the normal time).
(2) No overvoltage or oscillating frequency.
Polarised component.
Slight increase in drop-out time (1.1 to 1.5 times the normal time).
(3) Protection by limiting the transient voltage to 3 Uc max. and limitation of the oscillating frequency.
Slight increase in drop-out time (1.2 to 2 times the normal time).
(4) Complete the reference by replacing the dot with the required character.

Control relays

Dimensions:
page B7/20

Schemes:
page B7/21

DB439375.eps

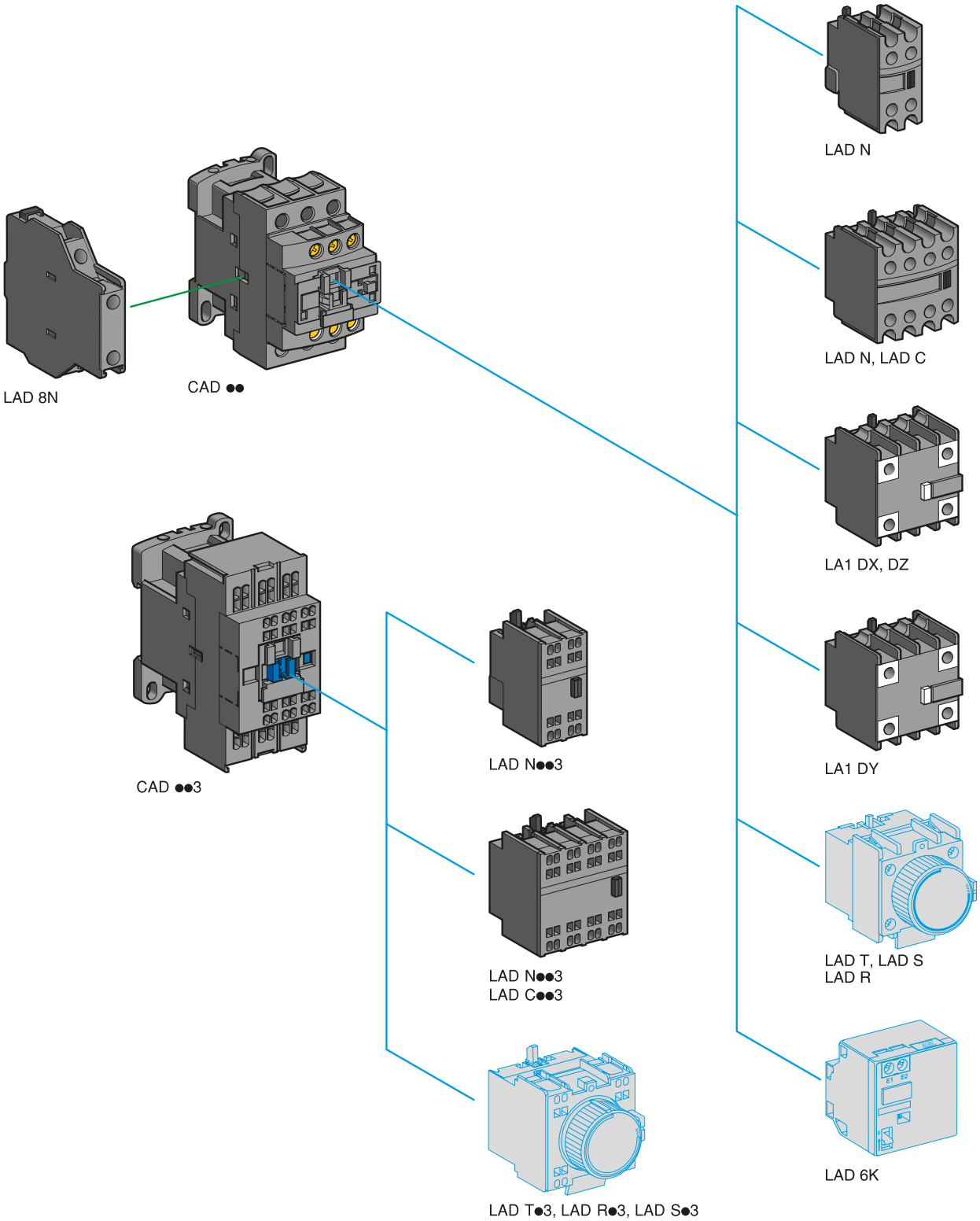

See page opposite for mounting possibilities according to control relay type and rating

Life Is On Schneider Electric

Product references

PB121687.eps



CAD50●●

PB121688.eps



CAD503●●

PB121689.eps



LADN22

PB123800.eps



LA1DY20

Control relays for connection by screw clamp terminals

Type	Number of contacts	Composition		Basic reference, to be completed by adding the control voltage code (1)
Instantaneous	5	5	–	**CAD50●●** (3)
		3	2	**CAD32●●** (3)

Control relays for connection by spring terminals

Instantaneous	5	5	–	**CAD503●●**
		3	2	**CAD323●●**

Instantaneous auxiliary contact blocks for connection by screw clamp terminals

For use in normal operating environments

Number of contacts	Maximum number per relay, Clip-on mounting: front	Maximum number per relay, Clip-on mounting: side	Composition		Reference	
2	1	–	1	1	**LADN11**	
	–	1 on LH side	1	1	**LAD8N11** (6)	
	1	–	2	–	**LADN20**	
	–	1 on LH side	2	–	**LAD8N20** (6)	
	1	–	–	2	**LADN02**	
	–	1 on LH side	–	2	**LAD8N02** (6)	
4 (4)	1	–	2	2	**LADN22**	**LADN22S** (7)
			1	3	**LADN13**	
			4	–	**LADN40**	
			–	4	**LADN04**	
			3	1	**LADN31**	
4 (4)	1	–	2	2	**LADC22**	

Including 1 N/O and 1 N/C make before break.

With dust and damp protected contacts, for use in particularly harsh industrial environments

Number of contacts	Maximum number per relay, Front mounting	Composition: protected (5)			Composition: not protected		Reference
2	1	2	–	–	–	–	**LA1DX20**
		–	2	–	–	–	**LA1DX02**
		2	–	2	–	–	**LA1DY20** (8)
4 (4)	1	2	–	–	2	–	**LA1DZ40**
		2	–	–	1	1	**LA1DZ31**

Instantaneous auxiliary contact blocks for connection by spring terminals

This type of connection is not possible for contact blocks LAD 8 and blocks with dust and damp protected contacts.
For all other instantaneous auxiliary contact blocks, add the digit **3** to the end of the references selected above.
Example: **LADN11** becomes **LADN113**.

(1) Please check the availability of your variant in the index page B7/12. The SEARCH function of your viewer can be used.
Standard control circuit voltages (for other voltages, please consult your Regional Sales Office).

a.c. supply												
Volts ∿	**24**	**42**	**48**	**110**	**115**	**220**	**230**	**240**	**380**	**400**	**415**	**440**
50/60 Hz	B7	D7	E7	F7	FE7	M7	P7	U7	Q7	V7	N7	R7

d.c. supply (coils with integral suppression device fitted as standard)												
Volts ⎓	**12**	**24**	**36**	**48**	**60**	**72**	**110**	**125**	**220**	**250**	**440**	
U from 0.7 to 1.25 Uc	JD	BD	CD	ED	ND	SD	FD	GD	MD	UD	RD	

Low consumption (coils with integral suppression device fitted as standard)								
Volts ⎓	**5**	**12**	**20**	**24**	**48**	**110**	**220**	**250**
Code	AL	JL	ZL	BL	EL	FL	ML	UL

(2) LC: low consumption.
*(3) To order control relays with connection by lugs, add the digit **6** to the end of the selected reference.*
Example: CAD50●● becomes CAD506●●.
(4) Blocks with 4 auxiliary contacts cannot be used on low consumption control relays.
(5) Product fitted with 4 earth screen continuity terminals.
(6) These contact blocks are allowed with AC coil control relay only.
(7) With red front face - for safety chain indication.
(8) With 2 earth screen continuity poles.

Characteristics: pages B7/22 to B7/24
Curves: page B7/25
Dimensions: page B7/26
Schemes: page B7/27

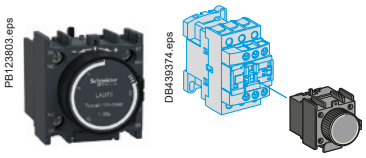

LADT2

Time delay auxiliary contact blocks for connection by screw clamp terminals (1)

Number and type of contacts	Maximum number per relay	Time delay		Reference
	Front mounting	Type	Range	
1 N/C and 1 N/O	1	On-delay	0.3…3 s (2)	**LADT0**
			1…30 s	**LADT2**
			10…180 s	**LADT4**
			1…30 s (3)	**LADS2**
		Off-delay	0.3…3 s (2)	**LADR0**
			1…30 s	**LADR2**
			10…180 s	**LADR4**

(Sealing cover: see page B8/42)

Time delay auxiliary contact blocks for connection by spring terminals

Add the digit **3** to the references selected above. Example: **LADT0** becomes **LADT03**.

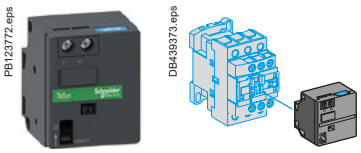

LAD6K10M

Mechanical latch blocks (4)

Unlatching control	Maximum number per relay	Basic reference to be completed (5)
	Front mounting	
Manual or electric	1	**LAD6K10●**

Suppressor modules

These modules clip onto the top of the control relay and the electrical connection is instantly made. Fitting of an input module is still possible.

RC circuits (Resistor-Capacitor)

- Effective protection for circuits highly sensitive to “high frequency” interference.
- Voltage limited to 3 Uc maximum and oscillating frequency limited to 400 Hz maximum.
- Slight time delay on drop-out (1.2 to 2 times the normal time).

For mounting on	Operational voltage	Reference
CAD ∿	∿ 24…48 V	**LAD4RCE**
	∿ 50…127 V	**LAD4RCG**
	∿ 110…250 V	**LAD4RCU**

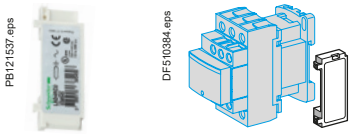

LAD4RCU

Varistors (peak limiting)

- Protection provided by limiting the transient voltage value to 2Uc maximum.
- Maximum reduction of transient voltage peaks.
- Slight time delay on drop-out (1.1 to 1.5 times the normal time).

CAD ∿	∿ 24…48 V	**LAD4VE**
	∿ 50…127 V	**LAD4VG**
	∿ 110…250 V	**LAD4VU**

Freewheel diode

- No overvoltage or oscillating frequency.
- Increase in drop-out time (6 to 10 times the normal time).
- Polarised component.

CAD ⎓	⎓ 5…600 V	**LAD4DDL** (6)

Bidirectional peak limiting diode (7)

- Protection provided by limiting the transient overvoltage value to 2Uc maximum.
- Maximum reduction of transient voltage peaks.

CAD ∿	∿ 24 V	**LAD4TB**
	∿ 72 V	**LAD4TS**
CAD ⎓	⎓ 24 V	**LAD4TBDL**
	⎓ 72 V	**LAD4TSDL**
	⎓ 125 V	**LAD4TGDL**
	⎓ 250 V	**LAD4TUDL**

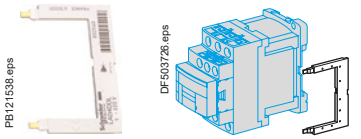

LAD4DDL

(1) These contact blocks cannot be used on low consumption control relays.
(2) With extended scale from 0.1 to 0.6 s.
(3) With switching time of 40 ms ±15 ms between opening of the N/C contact and closing of the N/O contact.
(4) Power should not be simultaneously applied or maintained to the mechanical latching block of the CADN. The duration of the control signal to the mechanical latching block and the CADN should be ⩾ 100 ms.
(5) Standard control circuit voltages (for other voltages, please consult your Regional Sales Office):

Volts ∿ and ⎓	**24**	**32/36**	**42/48**	**60/72**	**100**	**110/127**	**220/240**	**256/277**	**380/415**
Code	B	C	E	EN	K	F	M	U	Q

(6) Not compatible with low consumption control relays.
*(7) **CAD●●** ⎓ and low consumption control relays are fitted with a built-in bi-directional peak limiting diode suppressor as standard. On control relays produced after 15th July 2004, this diode is removable. It can therefore be replaced by the user (see references **LAD4T●●●** above). It can also be replaced by a freewheel diode **LAD4DDL**.*

Characteristics: pages B7/22 to B7/24 | Illustrations: page B7/8 | Curves: page B7/25 | Dimensions: page B7/26 | Schemes: page B7/27



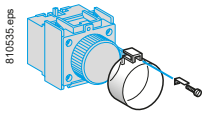

LA9D901



LAD9ET1S

Accessories (to be ordered separately)

Description	For mounting on	Sold in lots of	Unit reference
For marking			
Sheet of 64 blank legends, self-adhesive, 8 x 33 mm	CAD, LAD (4 contacts)	10	**LAD21**
Sheet of 112 blank legends, self-adhesive, 8 x 12 mm	LAD (2 contacts), LADT		**LAD22**
"SIS Label" labelling software for legends LAD21 and LAD22, supplied on CD-Rom	Multi-language version: English, French, German, Italian, Spanish	1	**XBY2U**
Legend holder, snap-in, 8 x 18 mm	LC1D09...38 LC1DT20...40 LADN (4 contacts) LADT, LADR	100	**LAD90**
For protection			
Sealing cover	LADT, LADR	1	**LA9D901**
Safety cover preventing access to the moving contact carrier	CAD	1	**LAD9ET1**
Red cover (for safety chain indication)	CAD	1	**LAD9ET1S**

Spare parts: coils

Specifications

- Average consumption at 20 °C:
  - inrush (cos φ = 0.75) 50/60 Hz: 70 VA at 50 Hz,
  - sealed (cos φ = 0.3) 50/60 Hz: 8 VA at 60 Hz,
- Operating range (θ < 60 °C): 0.85 to 1.1 Uc

Control circuit voltage Uc	Average resistance at 20 °C ±10 %	Inductance of closed circuit	Reference (1)
V	Ω	H	
			50/60 Hz
12	1.33	0.05	**LXD1J7**
24	5.37	0.22	**LXD1B7**
32	10.1	0.39	**LXD1C7**
42	17	0.67	**LXD1D7**
48	21.7	0.87	**LXD1E7**
110	124.1	4.6	**LXD1F7**
115	129.8	5	**LXD1FE7**
120	150.6	5.4	**LXD1G7** (2)
200	410.7	15	**LXD1L7**
208	430.4	16	**LXD1LE7** (2)
220	515.4	18	**LXD1M7** (3)
230	538.6	20	**LXD1P7**
240	562.3	22	**LXD1U7**
277	800.7	29	**LXD1W7** (2)
380	1551	55	**LXD1Q7** (4)
400	1633	60	**LXD1V7**
415	1694	65	**LXD1N7**
440	1993	73	**LXD1R7**
480	2398	87	**LXD1T7** (2)
500	2499	95	**LXD1S7**
575	3294	125	**LXD1SC7**
600	3810	136	**LXD1X7**
660	4656	165	**LXD1YC7**
690	5020	180	**LXD1Y7**

(1) The last 2 digits in the reference represent the voltage code.
(2) Coil for use only on 60 Hz.
*(3) Suitable for use on **230 V** / 50 Hz. In this case, apply a coefficient of 0.6 to the mechanical durability of the contactor (see pages B8/84 and B8/86).*
*(4) Suitable for use on **400 V** / 50 Hz. In this case, apply a coefficient of 0.6 to the mechanical durability of the contactor (see pages B8/84 and B8/86).*

Product references

CA2KN223B7
CA2KN223F7
CA2KN223P7
CA2KN223P72
CA2KN22B7
CA2KN22B72
CA2KN22D7
CA2KN22E7
CA2KN22F7
CA2KN22F72
CA2KN22FC7
CA2KN22FE7
CA2KN22G7
CA2KN22G72
CA2KN22L7
CA2KN22M7
CA2KN22M72
CA2KN22N7
CA2KN22P7
CA2KN22P72
CA2KN22Q7
CA2KN22R7
CA2KN22T7
CA2KN22U7
CA2KN22V7
CA2KN313P72
CA2KN315F7
CA2KN31B7
CA2KN31D7
CA2KN31E7
CA2KN31F7
CA2KN31G7
CA2KN31K7
CA2KN31M7
CA2KN31M72
CA2KN31P7
CA2KN31P72
CA2KN31U7
CA2KN31V7
CA2KN40B7
CA2KN40B72
CA2KN40E7
CA2KN40F7
CA2KN40FC72
CA2KN40G7
CA2KN40M7
CA2KN40N7
CA2KN40P7
CA2KN40T7
CA2KN40U7
CA2SK11B7
CA2SK11E7
CA2SK11F7
CA2SK11G7
CA2SK11M7
CA2SK11P7
CA2SK11T7
CA2SK11U7
CA2SK11UE7
CA2SK11V7
CA2SK20B7
CA2SK20D7
CA2SK20E7
CA2SK20F7
CA2SK20G7
CA2SK20M7
CA2SK20P7
CA2SK20Q7
CA2SK20T7
CA2SK20U7
CA2SK20UE7
CA2SKE20B7
CA2SKE20G7
CA2SKE20M7
CA2SKE20P7
CA2SKE20Q7
CA2SKE20T7
CA2SKE20U7
CA3KN223BD
CA3KN223BD3
CA3KN22BD
CA3KN22BD3
CA3KN22ED
CA3KN22ED3
CA3KN22FD
CA3KN22FD3
CA3KN22GD
CA3KN22GD3
CA3KN22JD
CA3KN22MD
CA3KN22MD3
CA3KN22ND
CA3KN22SD
CA3KN313BD
CA3KN313BD3
CA3KN315BD
CA3KN317SD
CA3KN31BD
CA3KN31BD3
CA3KN31ED
CA3KN31ED3
CA3KN31FD
CA3KN31FD3
CA3KN31GD
CA3KN31GD3
CA3KN31JD
CA3KN31MD
CA3KN31MD3
CA3KN31ND3
CA3KN31UD
CA3KN403BD
CA3KN403BD3
CA3KN40BD
CA3KN40BD3
CA3KN40ED
CA3KN40ED3
CA3KN40EPD
CA3KN40FD
CA3KN40FD3
CA3KN40GD
CA3KN40GD3
CA3KN40MD
CA3KN40MD3
CA3SK11BD
CA3SK20BD
CA3SK20JD
CA4KN223BW3
CA4KN225BW3
CA4KN22BW3
CA4KN22EW3
CA4KN22FW3
CA4KN22SW3
CA4KN313BW3
CA4KN31BW3
CA4KN31FW3
CA4KN31SW3
CA4KN403BW3
CA4KN40BW3
CA4KN40EW3
CA4KN40FW3
CAD323B7
CAD323BD
CAD323BL
CAD323E7
CAD323F7
CAD323FE7
CAD323G7
CAD323JD
CAD323P7
CAD326B7
CAD326BD
CAD326BL
CAD326CD
CAD326E7
CAD326F7
CAD326FD
CAD326G7
CAD326GD
CAD326K7
CAD326KD
CAD326L7
CAD326M7
CAD326MD
CAD326P7
CAD326Q7
CAD326R7
CAD326SD
CAD326SL
CAD326U7
CAD326V7
CAD326VD
CAD32B7
CAD32BD
CAD32BL
CAD32CD
CAD32D7
CAD32E7
CAD32ED
CAD32EL
CAD32F7
CAD32FC7
CAD32FD
CAD32FE7
CAD32FL
CAD32G7
CAD32GD
CAD32JD
CAD32JL
CAD32L7
CAD32M7
CAD32MD
CAD32N7
CAD32P7
CAD32Q7
CAD32R7
CAD32SD
CAD32T7
CAD32U7
CAD32UD
CAD32V7
CAD32X7
CAD32XD
CAD32Y7
CAD503BD
CAD503BL
CAD503FD
CAD503FE7
CAD503P7
CAD506B7
CAD506BD
CAD506ED
CAD506F7
CAD506FD
CAD506KD
CAD506M7
CAD506MD
CAD506P7
CAD506R7
CAD50B7
CAD50BD
CAD50BL
CAD50D7
CAD50E7
CAD50ED
CAD50F7
CAD50FD
CAD50FE7
CAD50G7
CAD50GD
CAD50K7
CAD50L7
CAD50M7
CAD50MD
CAD50N7
CAD50P7
CAD50Q7
CAD50R7
CAD50SD
CAD50U7
CAD50UD
CAD50Y7

This document is current. Click on the product reference to get the most recent availability status (hyperlink to **se.com** product datasheet).
If your product variant is no longer available, please consult your distributor or regional sales office.

Technical Data for Designers

Contents

TeSys SK Mini control relays:
> characteristics ..... B7/14 and B7/15
> dimensions B7/16
> schemes B7/17

TeSys K Control relays:
> characteristics ..... B7/18 and B7/19
> dimensions B7/20
> schemes B7/21

Deca Control relays:
> characteristics ..... B7/22 to B7/24
> curves B7/25
> dimensions B7/26
> schemes B7/27

Characteristics

Environment

Rated insulation voltage (Ui)	Conforming to IEC 60947, CSA 22-2 n° 14, UL 508	**V**	690	
Conforming to standards			IEC/EN 60947-5-1, UL 60947-5-1, CSA C22.2 n° 60947-5-1, GB/T 14048.5	
Approvals			cULus, EAC, UKCA, CB certification	
Degree of protection	Conforming to IEC 60529		Protection against direct finger contact IP2X	
Ambient air temperature around the device	Storage	**°C**	-50…+70	
	Operation	**°C**	-20…+50	
Maximum operating altitude	Without derating	**m**	2000	

Operating position

Vertical axis

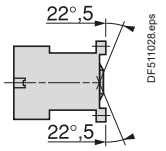

Without derating

Horizontal axis

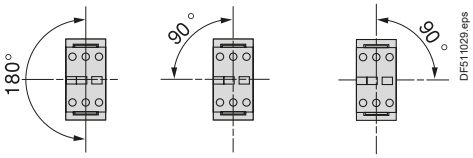

Without derating

			Min.	**Max.**
Connection by connectors	Solid cable	**mm²**	1 x 1.5 or 2 x 1.5	1 x 6 or 2 x 4
	Flexible cable without cable end	**mm²**	1 x 0.5 or 2 x 0.35	1 x 6 or 2 x 2.5
	Flexible cable with cable end	**mm²**	1 x 0.35 or 2 x 0.35	1 x 6 or 2 x 1.5
Tightening torque	Pozidriv n° 1 head	**N.m**	0.8	
Terminal referencing	Conforming to standards EN 50005 and EN 50011		Up to 4 contacts	

Control circuit characteristics

Control relay			**CA2SK**	**CA2SKE**	**CA3SK**
Rated control circuit voltage (Uc)		**V**	∼ 24…400		⎓ 12…72
Control voltage limits (≤ 50 °C)	For operation		0.85…1.1 Uc		0.85…1.1 Uc
	For drop-out		≤ 0.20 Uc		≤ 0.10 Uc
Average consumption at 20 °C and at Uc	Inrush		16 VA	23 VA	2.2 W
	Sealed		4.2 VA	4.9 VA	2.2 W
Heat dissipation		**W**	1.4	1.5	2.2
Operating time at 20 °C and at Uc	Between coil energisation and opening of the N/C contacts	**ms**	8…16		10…18
	Between coil energisation and closing of the N/O contacts	**ms**	7…14		8…12
	Between coil de-energisation and opening of the N/O contacts	**ms**	6…8		4…6
	Between coil de-energisation and closing of the N/C contacts	**ms**	8…10		6…8
Maximum operating rate	In operating cycles per hour		1200		1200
Mechanical durability at Uc in millions of operating cycles	50/60 Hz coil		10		–
	Standard ⎓ coil		–		10

Ref.
Control relays

References: pages B7/2 and B7/3
Dimensions: page B7/16
Schemes: page B7/17

Characteristics

Auxiliary contact characteristics of mini control relays and instantaneous contact blocks

Rated operational voltage (Ue)		**V**	Up to 690
Rated insulation voltage (Ui)	Conforming to IEC 96047	**V**	690
Conventional rated thermal current (Ith)	For ambient temperature ≤ 55 °C	**A**	10
Frequency of the operational current		**Hz**	Up to 400
Short-circuit protection	Conforming to IEC 60947, gl fuse	**A**	10

Operational power of contacts conforming to IEC 60947

	a.c. supply, category AC-15 Electrical durability (valid for up to 3600 operating cycles/hour) on an inductive load such as the coil of an electromagnet: making current (cos φ 0.7) = 10 times the power broken (cos φ 0.4).							**d.c. supply, category DC-13** Electrical durability (valid for up to 1200 operating cycles/hour) on an inductive load such as the coil of an electromagnet, without economy resistor, the time constant increasing with the load.					
	V	**24**	**48**	**110/ 127**	**220/ 230**	**380/ 400**	**440**	**V**	**24**	**48**	**110**	**220**	**440**
1 million operating cycles	**VA**	48	96	240	440	800	880	**W**	120	80	60	52	51
3 million operating cycles	**VA**	17	34	86	158	288	317	**W**	55	38	30	28	26
10 million operating cycles	**VA**	7	14	36	66	120	132	**W**	15	11	9	8	7
Occasional making capacity	**VA**	1000	2050	5000	10000	14000	13 000	**W**	720	600	400	300	230

Ref.
Control relays

References: page B7/3
Dimensions: page B7/16
Schemes: page B7/17

Dimensions and mounting

Dimensions

Mini control relays

CA2SK and CA3SK

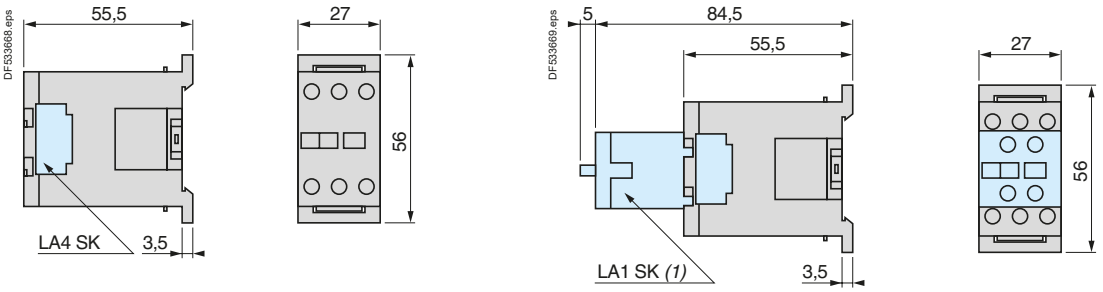

(1) Only on CA2SK20.

Mounting

Mini control relays

CA2SK and CA3SK

On mounting rail NSYDR200BD or NSYDR200 (⎓ 35 mm)

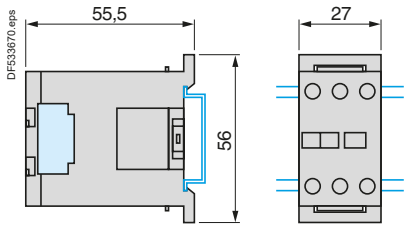

Dimensions

CA2SKE

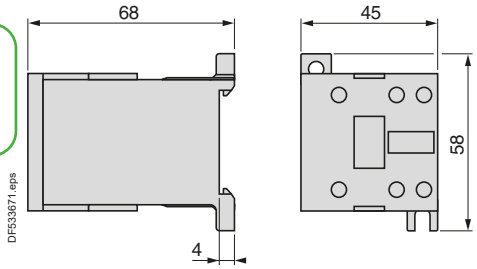

Mounting

CA2SKE

On panel

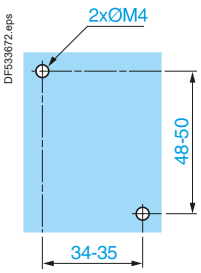

On mounting rail NSYDR200BD or NSYDR200 (⎓ 35 mm)

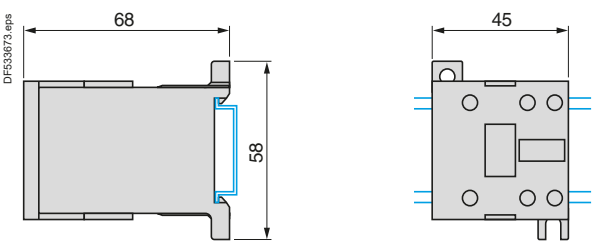

Ref.
Control relays

Schemes

Schemes

CA2SK20, CA3SK20
2 N/O

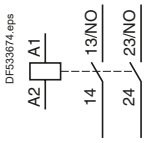

CA2SK11, CA3SK11
1 N/O + 1 N/C

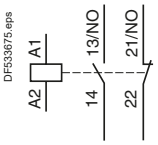

CA2SKE
2 N/O

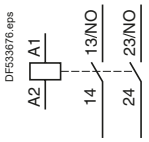

CA2SKE
Function diagram

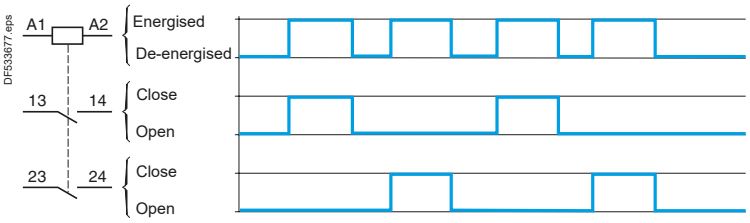

Instantaneous auxiliary contacts

2 N/O
LA1SK20

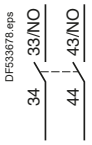

2 N/C
LA1SK02

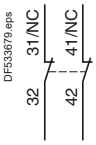

1 N/O + 1 N/C
LA1SK11

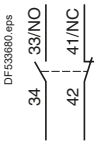

Ref.
Control relays

Characteristics

Environment

Conforming to standards			IEC/EN 60947-5-1, UL 60947-5-1, CSA C22.2 n° 60947-5-1, GB/T 14048.5		
Product certifications			UL, CSA, CCC, EAC, UKCA, CB certification		
Operating positions			**Vertical axis** 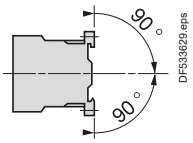 Without derating	**Horizontal axis** 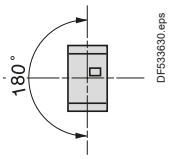 Without derating	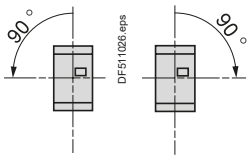 Possible positions for **CA2K** only, with derating, please consult your Regional Sales Office.
Connection			**Min.**	**Max.**	**Max. to IEC 60947**
Screw clamp connections	Solid cable	**mm²**	1 x 1.5	2 x 4	1 x 4 + 1 x 2.5
	Flexible cable without cable end	**mm²**	1 x 0.75	2 x 4	2 x 2.5
	Flexible cable with cable end	**mm²**	1 x 0.34	1 x 1.5 + 1 x 2.5	1 x 1.5 + 1 x 2.5
Spring terminals	Solid cable	**mm²**	1 x 0.75	1 x 1.5	2 x 1.5
	Flexible cable without cable end	**mm²**	1 x 0.75	1 x 1.5	2 x 1.5
Faston connectors	Clip	**mm**	2 x 2.8 or 1 x 6.35		
Solder pins for printed circuit board	With locating device between power and control circuits		4 mm x 35 microns		
Tightening torque	Philips head n° 2 and Ø6	**N.m**	0.8		
Terminal referencing	Conforming to standards EN 50005 and EN 50011		Up to 8 contacts		
Degree of protection	Conforming to IEC 60529		Protection against direct finger contact IP2x (devices with screw clamp terminals or pins for printed circuit board)		
Ambient air temperature around the device	Storage	**°C**	-50...+80		
	Operation	**°C**	-25...+50		
Maximum operating altitude	Without derating	**m**	2000		
Vibration resistance	Control relay open		2 gn		
5...300 Hz Conforming to IEC/EN 60068-2-27	Control relay closed		4 gn		
Flame resistance	Conforming to IEC 60695-2-11		850 °C		
Shock resistance (1/2 sine wave, 11 ms) Conforming to IEC/EN 60068-2-27	Control relay open		10 gn		
	Control relay closed		15 gn		

Control circuit characteristics

Control relay type			**CA2K**	**CA3K**	**CA4K**
Rated control circuit voltage (Uc)		**V**	∼ 12...690	⎓ 12...250	⎓ 12...120
Control voltage limits (y 50 °C) single voltage coil	For operation		0.8...1.15 Uc	0.8...1.15 Uc	0.7...1.3 Uc
	For drop-out		⩽ 0.2 Uc	⩽ 0.1 Uc	⩽ 0.1 Uc
Mechanical durability at Uc In millions of operating cycles	50/60 Hz coil		10	–	–
	Standard ⎓ coil		–	20	–
	Wide range, low consumption ⎓ coil		–	–	30
Maximum operating rate	In operating cycles per hour		10 000	10 000	6000
Average consumption at 20 °C and at Uc	Inrush		30 VA	3 W	1.8 W
	Sealed		4.5 VA	3 W	1.8 W
Heat dissipation		**W**	1.3	3	1.8
Operating time at 20 °C and at Uc	Between coil energisation and opening of the N/C contacts	**ms**	5...15	25...35	25...35
	Between coil energisation and closing of the N/O contacts	**ms**	10...20	30...40	30...40
	Between coil de-energisation and opening of the N/O contacts	**ms**	10...20	10	10...20
	Between coil de-energisation and closing of the N/C contacts	**ms**	15...25	15	15...25
Maximum immunity to microbreaks		**ms**	2	2	2

References: pages B7/4 to B7/7
Dimensions: page B7/20
Schemes: page B7/21

Characteristics

Contact characteristics of control relays and instantaneous contact blocks

Number of auxiliary contacts	On **CA●K**		4
	On **LA1K**		2 or 4 for **CA2K** and **CA3K,** 2 for **CA4K**
Rated operational voltage (Ue)	Up to	**V**	690
Rated insulation voltage (Ui)	Conforming to IEC 60947	**V**	690
	Conforming to UL 60947-5-1, CSA C22.2 n° 60947-5-1	**V**	600
Conventional thermal current (Ith)	For ambient temperature ≤ 50 °C	**A**	10
Frequency of the operational current		**Hz**	Up to 400
Minimum switching capacity	U min	**V**	17
	I min	**mA**	5
Short-circuit protection	Conforming to IEC 60947, gG fuse	**A**	10
Rated making capacity	Conforming to IEC 60947		
	I rms	**A**	110
Short-time rating	Permissible for		
	1 s	**A**	80
	500 ms	**A**	90
	100 ms	**A**	110
Insulation resistance		**MΩ**	> 10
Non-overlap distance	CA●K and LA1K: linked contacts conforming to INRS, BIA and CNA specifications	**mm**	0.5 (see schemes page B7/21)

Operational power of contacts conforming to IEC 60947

a.c. supply, category AC-15

Electrical durability (valid for up to 3600 operating cycles/hour) on an inductive load such as the coil of an electromagnet: making current (cos φ 0.7) = 10 times the power broken (cos φ 0.4)

	V	24	48	110/127	220/230	380/400	440	600/690
1 million operating cycles	**VA**	48	96	240	440	800	880	1200
3 million operating cycles	**VA**	17	34	86	158	288	317	500
10 million operating cycles	**VA**	7	14	36	66	120	132	200
Occasional making capacity	**VA**	1000	2050	5000	10000	14000	13000	9000

d.c. supply, category DC-13

Electrical durability (valid for up to 1200 operating cycles/hour) on an inductive load such as the coil of an electromagnet, without economy resistor, the time constant increasing with the load.

	V	24	48	110	220	440	600
1 million operating cycles	**W**	120	80	60	52	51	50
3 million operating cycles	**W**	55	38	30	28	26	25
10 million operating cycles	**W**	15	11	9	8	7	6
Occasional making capacity	**W**	720	600	400	300	230	200

1 Breaking limit of contacts valid for:
■ maximum of 50 operating cycles at 10 s intervals (power broken = making current x cos φ 0.7).

2 Electrical durability of contacts for:
■ 1 million operating cycles (**2a**)
■ 3 million operating cycles (**2b**)
■ 10 million operating cycles (**2c**).

3 Breaking limit of contacts valid for:
■ maximum of 20 operating cycles at 10 s intervals with current passing for 0.5 s per operating cycle.

4 Thermal limit

Power broken in VA

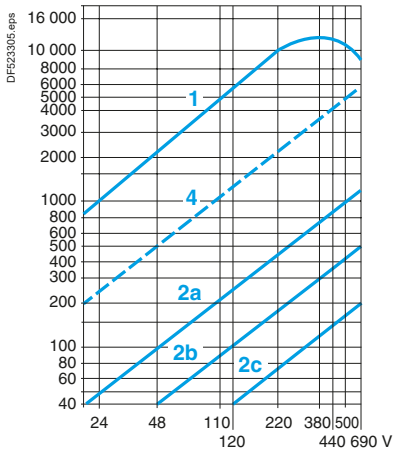

Power broken in W

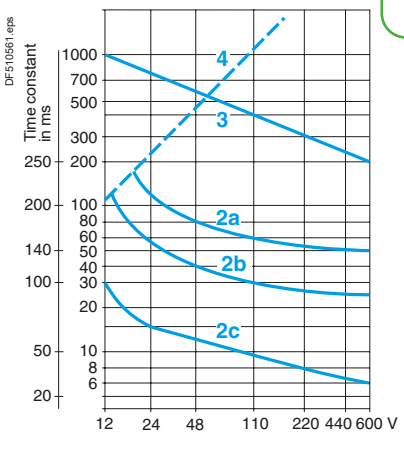

References: page B7/6
Dimensions: page B7/20
Schemes: page B7/21

Dimensions and mounting

Control relays

CA2K, CA3K, CA4K

On panel

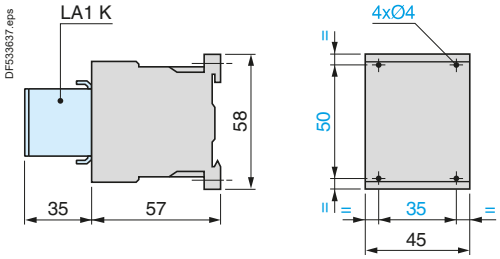

On printed circuit board

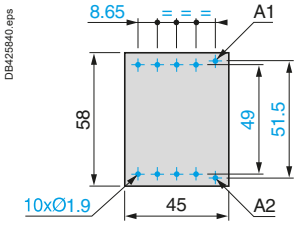

On mounting rail NSYDR200BD or NSYDR200 (⎓ 35 mm)

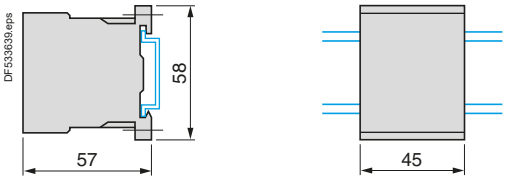

DX1AP25

On asymmetrical rail with clip-on mounting plates

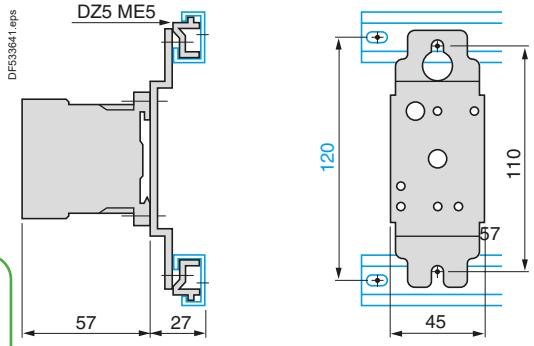

Electronic time delay contact blocks

LA2KT

On control relay

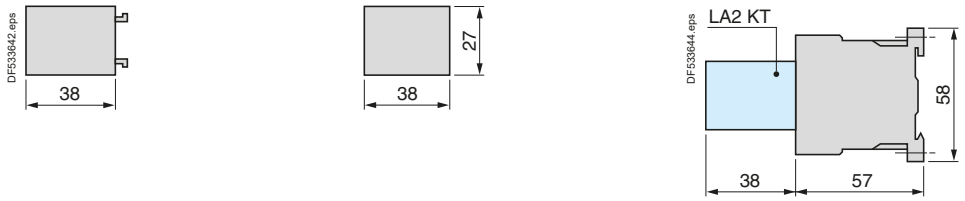

Suppressor modules

LA4K

On control relay

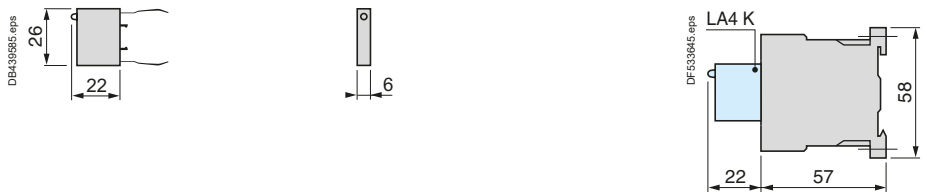

References:
pages B7/4 to B7/7

Characteristics:
pages B7/18 and B7/19

Schemes:
page B7/21

Life Is On Schneider Electric

Schemes

Control relays

CA2K, CA3K, CA4K

4 N/O

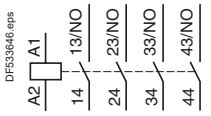

3 N/O + 1 N/C

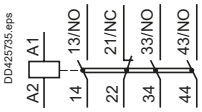

2 N/O + 2 N/C

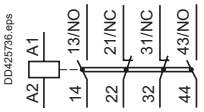

With integral suppression device

CA3K

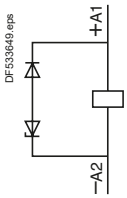

CA4K

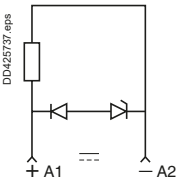

Instantaneous auxiliary contact blocks LA1K

For CA2K, CA3K, CA4K

2 N/O

LA1KN20, LA1 KN207

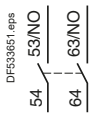

2 N/C

LA1KN02, LA1 KN027

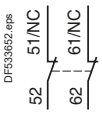

1 N/O + 1 N/C

LA1KN11, LA1 KN117

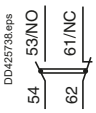

For CA2K, CA3K

4 N/O

LA1KN40, LA1 KN407



3 N/O + 1 N/C

LA1KN31, LA1 KN317

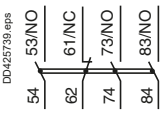

2 N/O + 2 N/C

LA1KN22

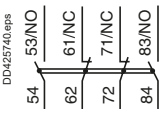

1 N/O + 3 N/C

LA1KN13

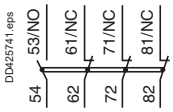

4 N/C

LA1KN04

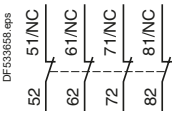

Electronic time delay contact blocks LA2KT

For CA2K, CA3K, CA4K

1 C/O

LA2KT2

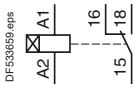

Suppressor modules

LA4KC

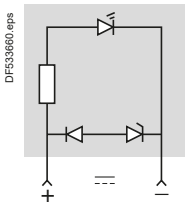

LA4KE

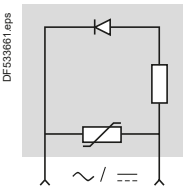

References:
pages B7/4 to B7/7

Characteristics:
pages B7/18 and B7/19

Dimensions:
page B7/20

Characteristics

Environment

Control relay type				CAD ∼	CAD ⎓	CAD ⎓ low consumption
Rated insulation voltage (Ui)	Conforming to IEC 60947-5-1 Overvoltage category III and degree of pollution 3		**V**	690	690	690
	Conforming to UL, CSA		**V**	600	600	600
Rated impulse withstand voltage (Uimp)	Conforming to IEC 60947		**kV**	6	6	6
Separation of electrical circuits	Conforming to IEC 60536			Reinforced insulation up to 400 V		
Conforming to standards				IEC/EN 60947-5-1, UL 60947-5-1, CSA C22.2 n° 60947-5-1, GB/T 14048.5		
Product certifications				UL, CSA, CCC, EAC, UKCA, CB certification, EU-RO-MR by DNV-GL		
Degree of protection	Conforming to IEC 60529			Front face protected against direct finger contact IP 2X		Protection against direct finger contact IP 2X
Ambient air temperature around the device	Storage		**°C**	-60…+80		
	Operation (1)		**°C**	-40…+60		
	Allowed (1)		**°C**	+60...+70 at Uc to 1,●● x Uc		
Maximum operating altitude	Without derating		**m**	3000	3000	3000
Operating positions	Without derating in the following positions			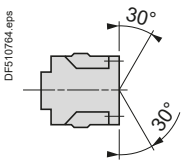	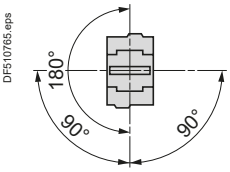	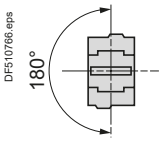
	Positions that are not allowed				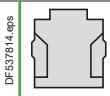	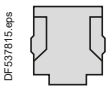
Shock resistance (2) half sine wave for 11ms	Control relay open			10 gn	10 gn	10 gn
	Control relay closed			15 gn	15 gn	15 gn
Vibration resistance (2) 5…300 Hz	Control relay open			2 gn	2 gn	2 gn
	Control relay closed			4 gn	4 gn	4 gn
Screw clamp connections	Flexible conductor without cable end	1 conductor	**mm²**	1…4	1…4	1…4
		2 conductors	**mm²**	1…4	1…4	1…4
	Flexible conductor with cable end	1 conductor	**mm²**	1…4	1…4	1…4
		2 conductors	**mm²**	1…2.5	1…2.5	1…2.5
	Solid conductor without cable end	1 conductor	**mm²**	1…4	1…4	1…4
		2 conductors	**mm²**	1…4	1…4	1…4
	Tightening torque		**N.m**	1.7	1.7	1.7
Spring terminal connections	1 or 2 flexible or rigid conductors without cable end		**mm²**	1…2.5	1…2.5	1…2.5

(1) As per IEC60947-1, operating time and drop out voltage given and tested for -5...+40 °C.
(2) In the least favourable direction, without change of contact state, with coil supplied at Uc.

Ref.
Control relays

References: pages B7/9 to B7/11
Curves: page B7/25
Dimensions: page B7/26
Schemes: page B7/27

Characteristics

Control circuit characteristics

Control relay type				CAD ∼	CAD ⎓	CAD low consumption
Rated control circuit voltage (Uc)			**V**	12…690	12…440	⎓ 5…72
Control voltage limits						
	Operation	With coil 50/60 Hz		0.8…1.1 Uc at 50 Hz	–	–
				0.85…1.1 Uc at 60 Hz	–	–
		With standard coil, wide range		–	0.7…1.25 Uc	0.7…1.25 Uc
	Drop-out			0.3…0.6 Uc	0.1…0.25 Uc	0.1…0.25 Uc
Average consumption at 20 °C and at Uc		∼ 50/60 Hz (at 50 Hz)	**VA**	Inrush: 70	–	–
				sealed: 8	–	–
		With standard coil	**W**	–	Inrush or sealed: 5.4	Inrush or sealed: 2.4
Operating time (at rated control circuit voltage and at 20 °C)		Between coil energisation and - opening of the N/C contacts	**ms**	4…19	55 ± 15 %	67 ± 15 %
		- closing of the N/O contacts	**ms**	12…22	63 ± 15 %	77 ± 15 %
		Between coil de-energisation and - opening of the N/O contacts	**ms**	4…12	20 ± 20 %	27 ± 20 %
		- closing of the N/C contacts	**ms**	6…17	25 ± 20 %	35 ± 20 %
Short supply failure		Maximum duration without affecting hold-in of the device	**ms**	2	2	2
Maximum operating rate		In operating cycles per second		3	3	3
Mechanical durability In millions of operating cycles		With coil 50/60 Hz (at 50 Hz)		30	–	–
		With standard coil ⎓ wide range		–	30	30
Time constant L/R			**ms**	–	28	40

Ref.
Control relays

References: pages B7/9 to B7/11
Curves: page B7/25
Dimensions: page B7/26
Schemes: page B7/27

Characteristics

Characteristics of instantaneous contacts incorporated in the control relay

Number of contacts				5
Rated operational voltage (Ue)	Up to		**V**	690
Rated insulation voltage (Ui)	Conforming to IEC 60947-5-1		**V**	690
	Conforming to UL, CSA		**V**	600
Conventional thermal current (Ith)	For ambient temperature ≤ 60 °C		**A**	10
Frequency of the operational current			**Hz**	25...400
Minimum switching capacity	U min		**V**	17
	I min		**mA**	5
Short-circuit protection	Conforming to IEC 60947-5-1			gG fuse: 10 A
Rated making capacity	Conforming to IEC 60947-5-1	I rms		∼ 140, ⎓ 250
Short-time rating	Permissible for	1 s	**A**	100
		500 ms	**A**	120
		100 ms	**A**	140
Insulation resistance			**MΩ**	> 10
Non-overlap time	Guaranteed between N/C and N/O contacts		**ms**	1.5 (on energisation and on de-energisation)
Tightening torque	Philips head n° 2 and Ø6		**N.m**	1.7
Non-overlap distance				Linked contacts in association with auxiliary contacts LADN
Mechanically linked contacts	Conforming to IEC 60947-5-1			The 3 N/O contacts and the 2 N/C contacts of CAD N32 are linked mechanically by one mobile contact carrier.

References: pages B7/9 to B7/11
Curves: page B7/25
Dimensions: page B7/26
Schemes: page B7/27

Rated operational power of contacts (conforming to IEC 60947-5-1)

a.c. supply, categories AC-14 and AC-15

Electrical durability (valid for up to 3600 operating cycles/hour) on an inductive load such as the coil of an electromagnet:
making current (cos φ 0.7) = 10 times the power broken (cos φ 0.4).

	V	24	48	115	230	400	440	600
1 million operating cycles	**VA**	60	120	280	560	960	1050	1440
3 million operating cycles	**VA**	16	32	80	160	280	300	420
10 million operating cycles	**VA**	4	8	20	40	70	80	100

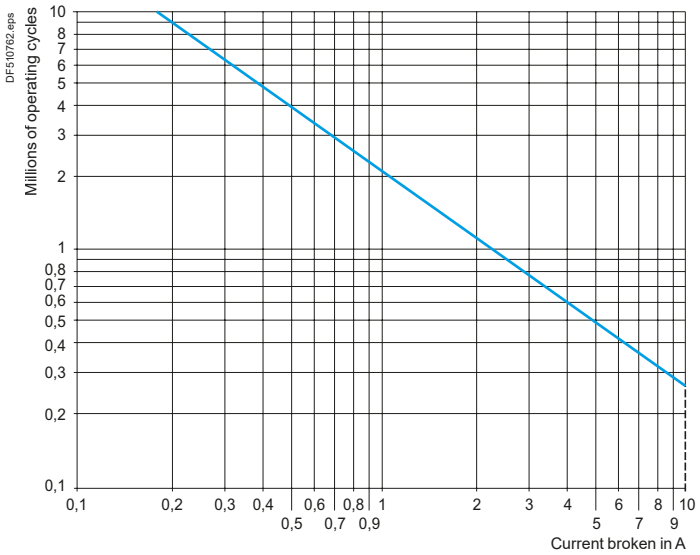

d.c. supply, category DC-13

Electrical durability (valid for up to 1200 operating cycles/hour) on an inductive load such as the coil of an electromagnet, without economy resistor, the time constant increasing with the power.

Operating cycles	V	24	48	125	250	440
1 million	**W**	96	76	76	76	44
3 million	**W**	48	38	38	32	–
10 million	**W**	14	12	12	–	–

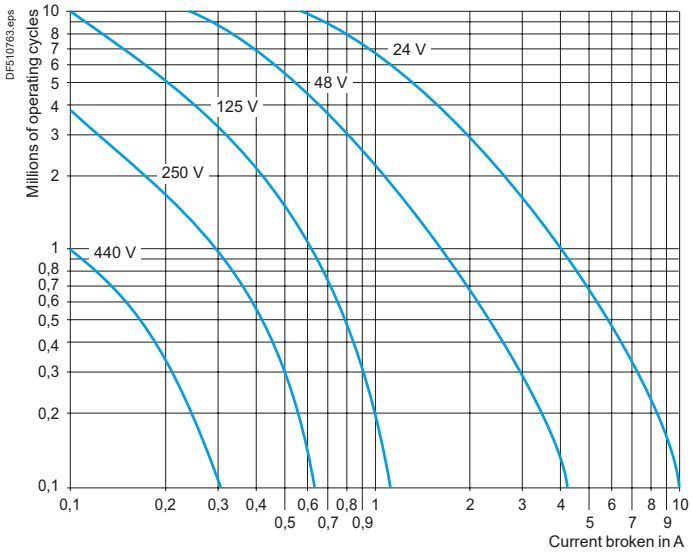

References:
pages B7/9 to B7/11
Characteristics:
pages B7/22 to B7/24
Dimensions:
page B7/26
Schemes:
page B7/27

Dimensions and mounting

Dimensions

CAD ∼

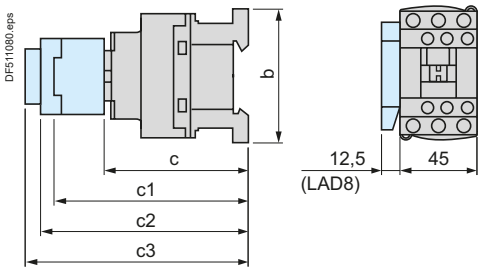

CAD		32 50	323 503
b		77	99
c	without cover or add-on blocks	84	84
	with cover, without add-on blocks	86	86
c1	with LADN or C (2 or 4 contacts)	117	117
c2	with LAD6K10	129	129
c3	with LADT, R, S	137	137
	with LADT, R, S and sealing cover	141	141

Operating cycles	V	24	48	125	250	440
1 million	W	120	90	75	68	61
3 million	W	70	50	38	33	28
10 million	W	25	18	14	12	10

CAD ⎓ or LC (low consumption)

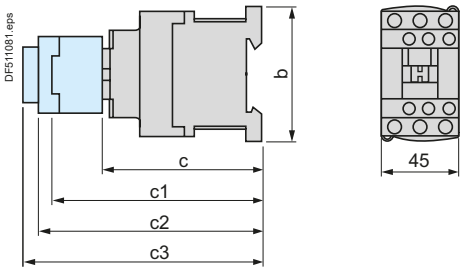

CAD		32 50	323 503
b		77	99
c	without cover or add-on blocks	93	93
	with cover, without add-on blocks	95	95
c1	with LADN or C (2 or 4 contacts)	126	126
c2	with LAD6K10	138	138
c3	with LADT, R, S	146	146
	with LADT, R, S and sealing cover	150	150

Mounting

CAD

Panel mounted

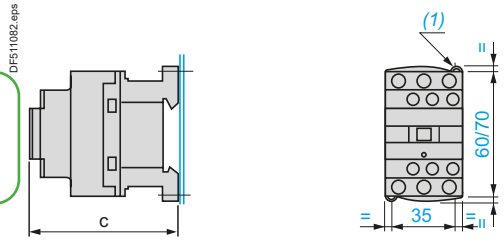

		CAD ∼	CAD ⎓ or LC
c	with cover	86	95

(1) 2 elongated holes 4.5 x 9.

Mounted on rail NSYDR200BD or NSYDR200

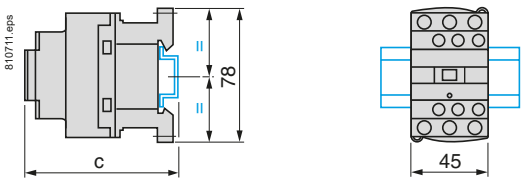

		CAD ∼	CAD ⎓ or LC
c	(NSYDR200BD) (2)	88	97
c	(NSYDR200BD) (2)	96	105

(2) With cover.

Mounted on plate AM1P

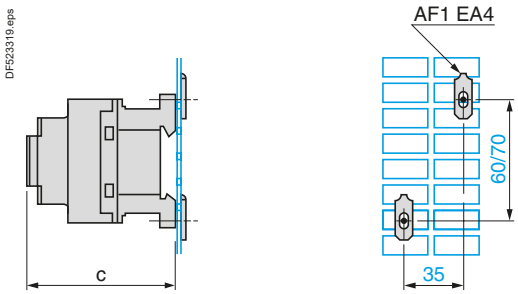

		CAD ∼	CAD ⎓ or LC
c	with cover	86	95

References:
pages B7/9 to B7/11
Illustration:
page B7/8
Characteristics:
pages B7/22 to B7/24
Curves:
page B7/25
Schemes:
page B7/27

Schemes

Instantaneous auxiliary contacts

5 N/O

CAD50

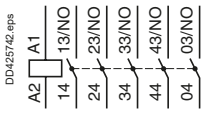

3 N/O + 2 N/C

CAD32

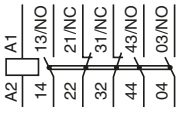

Instantaneous auxiliary contact blocks

1 N/O + 1 N/C

LADN11

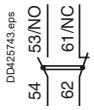

LAD8N11 (1)

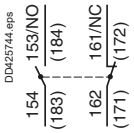

2 N/O

LADN20



LAD8N20 (1)

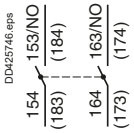

2 N/C

LAD8N02

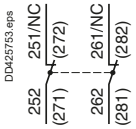

LADN02

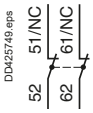

(1) The figures in brackets are for the device mounted on the RH side of the control relay.

2 N/O + 2F N/C

LADN22

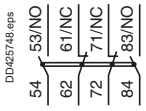

1 N/O + 3 N/C

LADN13

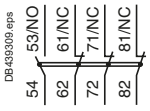

4 N/O

LADN40



4 N/C

LADN04

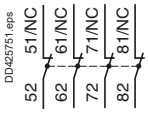

3 N/O + 1 N/C

LADN31

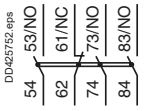

2 N/O + 2 N/C including 1 N/O + 1 N/C make before break

LADC22

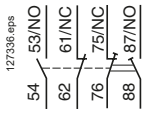

With dust and damp protected contacts

2 N/O protected

LA1DX20

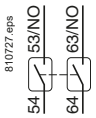

2 N/C protected

LA1DX02

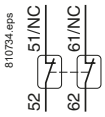

2 N/O protected (2) **with 2 cable screen terminals**

LA1DY20

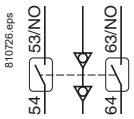

2 N/O protected + 2 N/O non protected

LA1DZ40

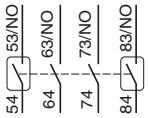

2 N/O protected + 1 N/O + 1 N/C non protected

LA1DZ31

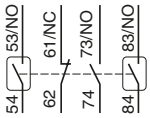

(2) Product fitted with 4 earth screen continuity terminals.

Time delay auxiliary contact blocks

On-delay 1 N/O + 1 N/C

LADT

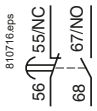

LADS

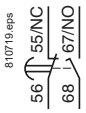

Off-delay 1 N/O + 1 N/C

LADR

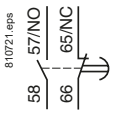

Mechanical latch blocks

LAD6K10

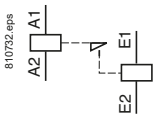

References: pages B7/9 to B7/11
Illustration: page B7/8
Characteristics: pages B7/22 to B7/24
Curves: page B7/25
Dimensions: page B7/26

TeSys Control
SK, K, SKGC, Deca, Modular Contactors

Chapter B8

TeSys SK, K contactors

Type of product	Range	Pages
Contactors 27 and 45 mm width for use in modular panels TeSys SK	From 12 to 20 A	B8/2
Contactors TeSys K	From 6 to 16 A	B8/4
Reversing pre-assembled contactors TeSys K	From 6 to 16 A	B8/8
Auxiliary contact blocks - accessories		B8/13



TeSys S207 series contactors for railways applications.
Click on image to download.



TeSys S335 series contactors for electrodomestic application.
Click on image to download.

TeSys Deca contactors

AC-3, AC-1, UL CSA applications- TeSys Deca green contactors (with AC/DC compatible coil)	From 9 to 80 A	B8/16
AC-3 applications - 3-pole, 4-pole TeSys Deca contactors	From 9 to 150 A	B8/22
AC-1 applications - 3-pole, 4-pole TeSys Deca contactors	From 25 to 200 A	B8/23
UL CSA application - 3-pole TeSys Deca contactors	From 25 to 200 A	B8/28
Reversing, changeover pre-assembled TeSys Deca contactors	From 9 to 150 A	B8/29
Reversing contactors TeSys Deca green contactors (with AC/DC compatible coil)	From 9 to 80 A	B8/33
Contactors for switching capacitor banks	From 12.5 to 60 kVAR	B8/34
Auxiliary contact blocks – accessories – spare coils for TeSys Deca		B8/36

Modular contactors

Modular contactors	From 16 to 100 A	B8/51
Modular Dual tariff contactors	16, 25, 40 or 100 A	B8/52
Modular Impulse relay	Up to 16 A	B8/53
Auxiliary contact blocks - accessories		B8/54

Product references

- Width of contactor 27 mm.
- Mounting on 35 mm ⎓ rail.
- Screw clamp terminals.

LC1SK contactors can be fitted with an add-on block or auxilliary contact block, LP1SK and LC1SKGC contactors can't.

PB111641.eps



LC1SK0600●●

Mini-contactors for motor in category AC-3

Standard power ratings of 3-phase motors 50/60 Hz in category AC-3 (1)			Rated operational voltage in AC-3 up to 400 V	Number of poles	Instantaneous auxiliary contacts		Basic reference. Complete with code indicating control circuit voltage (2) (3)
220 V 230 V	380 V 415 V	660 V 690 V					
kW	kW	kW	A				
1.1	2.2	2.2	6	2	–	–	**LC1SK0600●●**

Mini-contactors for motor in category AC-1

Non inductive loads maximum current (θ ⩽ 55 °C) utilisation category AC-1	Control circuit supply	Number of poles	Instantaneous auxiliary contacts		Basic reference. Complete with code indicating control circuit voltage (2) (3)
A					
12	a.c.	2	–	–	**LC1SK0600●●**
	d.c.	2	–	–	**LP1SK0600●●**

*(1) For use in AC-3 category and 3-phase circuits, an **LA1SK●●** auxiliary contact block should be ordered separately for mounting on the contactor.*
(2) Standard control circuit voltages (variable delivery times, please consult your Regional Sales Office):

Mini-contactors LC1SK									
Volts ∼ 50/60 Hz	24	48	110	120	220	230	240	380	400
Code	B7	E7	F7	G7	M7	P7	U7	Q7	V7

Mini-contactors LP1SK					
Volts ⎓	12	24	36	48	72
Code	JD	BD	CD	ED	SD

(3) Please check the availability of your variant in the index page B8/55. The SEARCH function of your viewer can be used.

PB111639.eps



LA1SK01

Add-on power pole (for 3-phase circuits) with aux. contact

For use on contactor LC1SK0600●● with 1 NO power pole (6 A AC-3, 10 A AC-1) and with 1 NC aux. contact (Ith 10 A). Ue 690 V AC 50/60 Hz for both contacts	Number of poles	Instantaneous auxiliary contacts		Reference
Clip-on front mounting	1	–	1	**LA1SK01**

Instantaneous auxiliary contact blocks

For use on contactor LC1SK0600●● Aux. contacts: Ith 10 A. Ue: 690 V AC 50/60 Hz	Maximum number of blocks per contactor	Composition		Reference
Clip-on front mounting	1	2	–	**LA1SK20**
		–	2	**LA1SK02**
		1	1	**LA1SK11**

PB111640.eps



LA4SK●1●

Coil suppressor modules

Clip-on fixing and electrical connection on right-hand side, without use of tools

For use on contactors	Type	For voltages	Sold in lots of	Unit reference
LC1SK0600●● LP1SK0600●●, LC1SKGC	Varistor (1)	∼ and ⎓ 24 V…48 V	10	**LA4SKE1E**
		∼ and ⎓ 110 V…250 V	10	**LA4SKE1U**
	Diode (2)	⎓ 24 V…250 V	10	**LA4SKC1U**

(1) Protection provided by limiting the transient voltage to 2 Uc max. Maximum reduction of transient voltage peaks. Slight increase in drop-out time (1.1 to 1.5 times the normal time).
(2) No overvoltage or oscillating frequency. Slight increase in drop-out time (1.1 to 1.5 times the normal time).

Characteristics: pages B8/62 to B8/65
Dimensions, schemes: page B8/66
Click **HERE** for access to online contactor selector

Product references

Mini-contactors 25 and 47 mm pitch for use in modular panels.
- Mounting on 35 mm ⎓ rail or fixing by four Ø4 screws, except for LC1SKGC200.
- Connection by connectors.
- Mini-contactor fitted with transparent, sealable protective cover to prevent front face access.

PB111643.eps



LC1SKGC200

Mini-contactors, width 27 mm

Standard power ratings of 3-phase motors 50/60 Hz in category AC-3			Rated operational current in AC-3 up to 400 V	Non inductive loads category AC-1 maximum current θ ≤ 50 °C	No. of poles			Basic reference, to be completed by adding the voltage code (1) (2)
220 V 230 V	380 V 415 V	660 V 690 V						
kW	kW	kW	A	A				
–	–	–	5	20	2	–	–	**LC1SKGC200●●**

PB111644.eps



LC1SKGC300

Mini-contactors, width 45 mm

Standard power ratings of 3-phase motors 50/60 Hz in category AC-3			Rated operational current in AC-3 up to 400 V	Non inductive loads category AC-1 maximum current θ ≤ 50 °C	No. of poles			Basic reference, to be completed by adding the voltage code (1) (2)
220 V 230 V	380 V 415 V	660 V 690 V						
kW	kW	kW	A	A				
1.1	4	4	9	20	3	1	–	**LC1SKGC310●●**
					3	–	1	**LC1SKGC301●●**

(1) Standard control circuit voltages (for other voltages, please consult your Regional Sales Office):

Volts ∼ 50/60 Hz	24	48	110	120	220	230	240	380	400
Code	B7	E7	F7	G7	M7	P7	U7	Q7	V7

(2) Please check the availability of your variant in the index page B8/55. The SEARCH function of your viewer can be used.

Contactors

Characteristics: pages B8/67 to B8/69
Curves: page B8/70
Dimensions, schemes: page B8/71
Click **HERE** for access to online contactor selector

PB123779.tif



LC1K0910●●

PB123781.eps



LC1K09103●●

PB123783.eps



LC1K09107●●

PB123782.eps



LC1K09105●●

PB123786.eps



LC7K0910●●

Mounting on 35 mm ⊔ rail or Ø4 screw fixing.
Screws in the open "ready-to-tighten" position.
Add-on auxiliary contact blocks and accessories, see pages B8/13 to B8/15.

3-pole contactors - Motor control 6 to 16 A in categories AC-3 AC-4 - a.c. coil

Standard power ratings of 3-phase motors 50-60 Hz in category AC-3			Rated operational current in category AC-3 440 V up to	Instantaneous auxiliary contacts		Basic reference, to be completed by adding the voltage code (1) (2)
220 V 230 V	380 V 415 V	440/500 V 660/690 V				
kW	kW	kW	A			
Screw clamp connections						
1.5	2.2	3	**6**	1	-	**LC1K0610●●**
				-	1	**LC1K0601●●**
2.2	4	4	**9**	1	-	**LC1K0910●●**
				-	1	**LC1K0901●●**
3	5.5	4 (> 440)	**12**	1	-	**LC1K1210●●**
		5.5 (440)		-	1	**LC1K1201●●**
4	7.5	4 (> 440)	**16**	1	-	**LC1K1610●●**
		5.5 (440)		-	1	**LC1K1601●●**

Spring terminal connections (3)

For 6 to 12 A ratings only, in the references selected above, insert a figure **3** before the voltage code.
Example: **LC1K0610●●** becomes **LC1K06103●●.**

Faston connectors, 1 x 6.35 or 2 x 2.8

For 6 to 16 A ratings, in the references selected above, insert a figure **7** before the voltage code.
Example: **LC1K0610●●** becomes **LC1K06107●●**.

Solder pins for printed circuit boards

For 6 to 16 A ratings, in the references selected above, insert a figure **5** before the voltage code.
Example: **LC1K0610●●** becomes **LC1K06105●●**.

3-pole silent contactors

Recommended for use in areas sensitive to noise, high interference mains supplies, etc.
Coil with rectifier incorporated, suppressor fitted as standard.

Screw clamp connections						
1.5	2.2	3	**6**	1	-	**LC7K0610●●**
				-	1	**LC7K0601●●**
2.2	4	4	**9**	1	-	**LC7K0910●●**
				-	1	**LC7K0901●●**
3	5.5	4 (> 440)	**12**	1	-	**LC7K1210●●**
		5.5 (440)		-	1	**LC7K1201●●**

Faston connectors, 1 x 6.35 or 2 x 2.8

In the references selected above, insert a figure **7** before the voltage code.
Example: **LC7K0610●●** becomes **LC7K06107●●**.

Solder pins for printed circuit boards

In the references selected above, insert a figure **5** before the voltage code.
Example: **LC7K0610●●** becomes **LC7K06105●●**.

Standard control circuit voltages (for other voltages, please consult your Regional Sales office)

Coil voltage codes - a.c. (4)

Contactors LC1K (0.8…1.15 Uc) *(0.85…1.1 Uc)*

Volts	**12**	**20**	**24** (1)	**36**	**42**	**48**	**110**	**115**	**120**	**127**	**200/208**		***220/230***	***230***	***230/240***
50 Hz (5)			B5		D5	E5								*P5*	
50/60 Hz	J7	Z7	B7	C7	D7	E7	F7	FE7	G7	FC7	L7		*M7*	*P7*	*U7*
Volts	**256**	**277**	***380/400***		**400**	***400/415***		**440**	**480**	**500**	**575**	**600**	**660/690**		
50/60 Hz	W7	UE7	*Q7*	–	V7	*N7*		R7	T7	S7	SC7	X7	Y7	–	–

Up to and including 240 V, coil with integral suppression device available: add **2** to the code required. Example: **J72**.

Contactors LC7K (0.85…1.1 Uc)

Volts	**24**	**42**	**48**	**110**	**115**	**220**	**230/240**
50/60 Hz	B7	D7	E7	F7	FE7	M7	U7

*(1) For mains supplies with a high level of interference (voltage surge > 800 V), use a suppressor module **LA4KE1FC** (50…129 V) or **LA4KE1UG** (130…250 V), see page B8/14.*
(2) Please check the availability of your variant in the index page B8/55. The SEARCH function of your viewer can be used.
*(3) For **LC●K●●●●3 / LP●K●●●●3** with spring terminal, Ith max = 10 A.*
(4) (0.8…1.15 Uc) for single voltage coil; (0.85…1.1 Uc) for dual voltage coil, exemple 200/208 V AC.
(5) Only available for 'screw clamp terminals' versions.

Characteristics: pages B8/72 to B8/74
Dimensions: page B8/76
Schemes: page B8/77
Click HERE for access to online contactor selector

PB123787.eps



LP1K0910●●

PB123789.eps



LP1K09103●●

PB123790.eps



LP1K09105●●

PB123792.eps



LP4K0910●●

Contactor selection according to utilisation category, see pages A5/34 to A5/39 and A5/42 to A5/45.
Mounting on 35 mm ⎓ rail or Ø4 screw fixing.
Screws in the open “ready-to-tighten” position.
Add-on auxiliary contact blocks and accessories, see pages B8/13 to B8/15.

3-pole contactors - Motor control 6 to 12 A in categories AC-3 AC-4 - d.c. coil

Standard power ratings of 3-phase motors 50-60 Hz in category AC-3			Rated operational current in category AC-3 440 V up to	Instan-taneous auxiliary contacts		Basic reference, to be completed by adding the voltage code (1) (2)
220 V 230 V	380 V 415 V	440/500 V 660/690 V				
kW	kW	kW	A			
Screw clamp connections						
1.5	2.2	3	**6**	1	–	**LP1K0610●●**
				–	1	**LP1K0601●●**
2.2	4	4	**9**	1	–	**LP1K0910●●**
				–	1	**LP1K0901●●**
3	5.5	4 (> 440)	**12**	1	–	**LP1K1210●●**
		5.5 (440)		–	1	**LP1K1201●●**
Spring terminal connections (3)						
In the references selected above, insert a figure **3** before the voltage code. Example: **LP1K0610●●** becomes **LP1K06103●●**.						
Faston connectors, 1 x 6.35 or 2 x 2.8						
In the references selected above, insert a figure **7** before the voltage code. Example: **LP1K0610●●** becomes **LP1K06107●●**.						
Solder pins for printed circuit boards						
In the references selected above, insert a figure **5** before the voltage code. Example: **LP1K0610●●** becomes **LP1K06105●●**.						

3-pole low consumption contactors

Compatible with programmable controller outputs.
Wide range coil (0.7…1.30 Uc), suppressor fitted as standard, consumption 1.8 W.

Screw clamp connections						
1.5	2.2	3	**6**	1	–	**LP4K0610●●**
				–	1	**LP4K0601●●**
2.2	4	4	**9**	1	–	**LP4K0910●●**
				–	1	**LP4K0901●●**
3	5.5	4 (> 440)	**12**	1	–	**LP4K1210●●**
		5.5 (440)		–	1	**LP4K1201●●**
Spring terminal connections						
In the references selected above, insert a figure **3** before the voltage code. Example: **LP4K0610●●** becomes **LP4K06103●●**.						
Faston connectors, 1 x 6.35 or 2 x 2.8						
In the references selected above, insert a figure **7** before the voltage code. Example: **LP4K0610●●** becomes **LP4K06107●●**.						
Solder pins for printed circuit boards						
In the references selected above, insert a figure **5** before the voltage code. Example: **LP4K0610●●** becomes **LP4K06105●●**.						

Standard control circuit voltages (for other voltages, please consult your Regional Sales office)

d.c. supply (contactors LP1K: 0.8...1.15 Uc)

Volts	**12**	**20**	**24** (1)	**36**	**48**	**60**	**72**	**100**	**110**	**125**	**155**	**174**	**200**	**220**	**230**	**240**	**250**
Code	JD	ZD	BD	CD	ED	ND	SD	KD	FD	GD	PD	QD	LD	MD	MPD	MUD	UD

Coil with integral suppression device available: add **3** to the code required. Example: **JD3**

Low consumption (contactors LP4K: 0.7...1.3 Uc)

Volts	**12**	**20**	**24**	**48**	**72**	**110**	**120**
Code	JW3	ZW3	BW3	EW3	SW3	FW3	GW3

Coil with integral suppression device fitted as standard, by bi-directional peak limiting diode.

*(1) For **LP1K** only, when connecting an electronic sensor or timer in series with the contactor coil, select a 20 V coil (∼ control circuit voltage code Z7, ⎓ control circuit voltage code ZD) so as to compensate for the incurred voltage drop.*
(2) Please check the availability of your variant in the index page B8/55. The SEARCH function of your viewer can be used.
*(3) For **LC●K●●●●3** / **LP●K●●●●3** with spring terminal), Ith max = 10 A.*

Characteristics: pages B8/72 to B8/74
Dimensions: page B8/76
Schemes: page B8/77
Click HERE for access to online contactor selector


PB123780.eps

LC1K09004●●

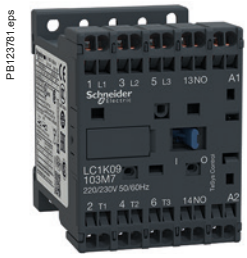
PB123781.eps

LC1K09103●●


PB123783.eps

LC1K09107●●

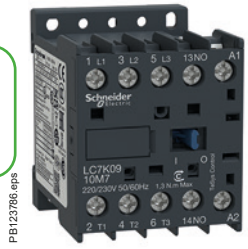
PB123786.eps

LC7K0910●●

Contactor selection according to utilisation category, see pages A5/40 and A5/41.
Mounting on 35 mm ⎓ rail or Ø4 screw fixing.
Screws in the open "ready-to-tighten" position.
Add-on auxiliary contact blocks and accessories, see pages B8/13 to B8/15.

3 or 4-pole contactors - Load control up to 20 A in category AC-1 - a.c. coil (1)

Non-inductive loads Category AC-1 Maximum current at θ ≤ 50 °C	Number of poles		Instantaneous auxiliary contacts		Basic reference, to be completed by adding the voltage code (2) (3)
A					
Screw clamp connections					
20	3	–	1	–	**LC1K0910●●**
					or **LC1K1210●●**
	3	–	–	1	**LC1K0901●●**
					or **LC1K1201●●**
	4	–	–	–	**LC1K09004●●**
					or **LC1K12004●●**
	2	2	–	–	**LC1K09008●●**

Spring terminal connections (4)

In the references selected above, insert a figure **3** before the voltage code.
Example: **LC1K0910●●** becomes **LC1K09103●●**.

Faston connectors, 1 x 6.35 or 2 x 2.8

In the references selected above, insert a figure **7** before the voltage code.
Example: **LC1K0910●●** becomes **LC1K09107●●**.

Solder pins for printed circuit boards

In the references selected above, insert a figure **5** before the voltage code.
Example: **LC1K0910●●** becomes **LC1K09105●●**.

3 or 4-pole silent contactors (1)

Recommended for use in areas sensitive to noise, high interference mains supplies, etc.
Coil with rectifier incorporated, suppressor fitted as standard.

Screw clamp connections					
20	3	–	1	–	**LC7K0910●●**
					or **LC7K1210●●**
	3	–	–	1	**LC7K0901●●**
					or **LC7K1201●●**
	4	–	–	–	**LC7K09004●●**
					or **LC7K12004●●**
	2	2	–	–	**LC7K09008●●**

Faston connectors, 1 x 6.35 or 2 x 2.8

In the references selected above, insert a figure **7** before the voltage code.
Example: **LC7K0910●●** becomes **LC7K09107●●**.

Solder pins for printed circuit boards

In the references selected above, insert a figure **5** before the voltage code.
Example: **LC7K0910●●** becomes **LC7K09105●●**.

(1) Coordination tables between 9 and 12 A ratings according to number of operating cycles, see AC-1 curve on page A5/40.

Standard control circuit voltages (for other voltages, please consult your Regional Sales office)

Coil voltage codes - a.c. (5)

Contactors LC1K (0.8…1.15 Uc) *(0.85…1.1 Uc)*

Volts	**12**	**20**	**24** (2)	**36**	**42**	**48**	**110**	**115**	**120**	**127**	**200/208**		***220/230***	**230**	***230/240***
50 Hz (6)			B5		D5	E5								P5	
50/60 Hz	J7	Z7	B7	C7	D7	E7	F7	FE7	G7	FC7	L7		*M7*	P7	*U7*
Volts	**256**	**277**	***380/400***		**400**	***400/415***		**440**	**480**	**500**	**575**	**600**	***660/690***		
50/60 Hz	W7	UE7	*Q7*		V7	*N7*		R7	T7	S7	SC7	X7	*Y7*		

Up to and including 240 V, coil with integral suppression device available: add **2** to the code required. Example: **J72.**

Contactors LC7K (0.8…1.1 Uc)

Volts	**24**	**42**	**48**	**110**	**115**	**220**	**230/240**
50/60 Hz	B7	D7	E7	F7	FE7	M7	U7

*(2) For mains supplies with a high level of interference (voltage surge > 800 V), use a suppressor module **LA4KE1FC** (50…129 V) or **LA4KE1UG** (130…250 V), see page B8/14.*
(3) Please check the availability of your variant in the index page B8/55. The SEARCH function of your viewer can be used.
*(4) For **LC●K●●●●3 / LP●K●●●●3** with spring terminal, Ith max = 10 A.*
(5) (0.8…1.15 Uc) for single voltage coil; (0.85…1.1 Uc) for dual voltage coil, exemple 200/208 V AC.
(6) Only available for 'screw clamp terminals' versions.

Characteristics: pages B8/72 to B8/74
Dimensions: page B8/76
Schemes: page B8/77
Click HERE for access to online contactor selector

Product references

Contactor selection according to utilisation category, see pages A5/40 and A5/41.
Mounting on 35 mm ⎓ rail or Ø4 screw fixing.
Screws in the open “ready-to-tighten” position.
Add-on auxiliary contact blocks and accessories, see pages B8/13 to B8/15.



LP1K09004●●



LP1K09103●●



LP1K09105●●



LP4K0910●●●

3 and 4-pole contactors - Load control - 20 A in category AC-1 - d.c. coil (1)

Non-inductive loads Category AC-1 Maximum current at θ ≤ 50 °C	Number of poles		Instantaneous auxiliary contacts		Basic reference, to be completed by adding the voltage code (2) (3)
A					
Screw clamp connections					
20	3	–	1	–	**LP1K0910●●**
					or **LP1K1210●●**
	3	–	–	1	**LP1K0901●●**
					or **LP1K1201●●**
	4	–	–	–	**LP1K09004●●**
					or **LP1K12004●●**
	2	2	–	–	**LP1K09008●●**
Spring terminal connections (4)					
In the references selected above, insert a figure **3** before the voltage code. Example: **LP1K0910●●** becomes **LP1K09103●●**.					
Faston connectors, 1 x 6.35 or 2 x 2.8					
In the references selected above, insert a figure **7** before the voltage code. Example: **LP1K0910●●** becomes **LP1K09107●●**.					
Solder pins for printed circuit boards					
In the references selected above, insert a figure **5** before the voltage code. Example: **LP1K0910●●** becomes **LP1K09105●●**.					

3 or 4-pole 20 A / AC-1 - d.c. low consumption coil (1)

Compatible with programmable controller outputs.
Wide range coil (0.7…1.30 Uc), suppressor fitted as standard, consumption 1.8 W.

Screw clamp connections					
20	3	–	1	–	**LP4K0910●●●**
					or **LP4K1210●●●**
	3	–	–	1	**LP4K0901●●●**
					or **LP4K1201●●●**
	4	–	–	–	**LP4K09004●●●**
					or **LP4K12004●●●**
	2	2	–	–	**LP4K09008●●●**
Spring terminal connections					
In the references selected above, insert a figure **3** before the voltage code. Example: **LP4K0910●●** becomes **LP4K09103●●**.					
Faston connectors, 1 x 6.35 or 2 x 2.8					
In the references selected above, insert a figure **7** before the voltage code. Example: **LP4K0910●●** becomes **LP4K09107●●**.					
Solder pins for printed circuit boards					
In the references selected above, insert a figure **5** before the voltage code. Example: **LP4K0910●●** becomes **LP4K09105●●**.					

(1) Coordination tables between 9 and 12 A ratings according to number of operating cycles, see AC-1 curve on page A5/40.

Standard control circuit voltages (for other voltages, please consult your Regional Sales office)

Coil voltage codes - d.c. (contactors LP1K: 0.8...1.15 Uc)

Volts ⎓	12	20	24 (2)	36	48	60	72	100	110	125	155	174	200	220	230	240	250
Code	JD	ZD	BD	CD	ED	ND	SD	KD	FD	GD	PD	QD	LD	MD	MPD	MUD	UD

Coil with integral suppression device available: add **3** to the code required. Example: **JD3.**

Coil voltage codes - low consumption d.c. (contactors LP4K: 0.7...1.3 Uc)

Volts ⎓	12	20	24	48	72	110	120
Code	JW3	ZW3	BW3	EW3	SW3	FW3	GW3

Coil with integral suppression device fitted as standard, by bi-directional peak limiting diode.

*(2) For **LP1K** only, when connecting an electronic sensor or timer in series with the contactor coil, select a 20 V coil (∿ control circuit voltage code Z7, ⎓ control circuit voltage code ZD) so as to compensate for the incurred voltage drop.*

*(3) **Please check the availability of your variant in the index page B8/55. The SEARCH function of your viewer can be used.***

*(4) For **LC●K●●●●3 / LP●K●●●●3** with spring terminal, Ith max = 10 A.*

Characteristics: pages B8/72 to B8/74
Dimensions: page B8/76
Schemes: page B8/77
Click **HERE** for access to online contactor selector

PB123784.tif



LC2K0910●●

PB123785.eps



LC2K09105●●

Reversing contactor selection according to utilisation category, see pages A5/34 to A5/39 and A5/42 to A5/45.
Integral mechanical interlock.
It is essential to link the contacts of the electrical interlock.
Pre-wired power circuit connections as standard on screw clamp versions.
Mounting on 35 mm ⎓ rail or Ø4 screw fixing. Screws in the open "ready-to-tighten" position.
Add-on auxiliary contact blocks and accessories, see pages B8/13 to B8/15.

3-pole reversing contactors - Motor control 6 to 16 A in categories AC-3 AC-4 - a.c. coil

Standard power ratings of 3-phase motors 50/60 Hz in category AC-3			Rated operational current in category AC-3 440 V up to	Instantaneous auxiliary contacts per contactor		Basic reference, to be completed by adding the voltage code (1) (2)
220 V 230 V	380 V 415 V	440/500 V 660/690 V				
kW	kW	kW	A			
Screw clamp connections						
1.5	2.2	3	**6**	1	–	**LC2K0610●●**
				–	1	**LC2K0601●●**
2.2	4	4	**9**	1	–	**LC2K0910●●**
				–	1	**LC2K0901●●**
3	5.5	4 (> 440)	**12**	1	–	**LC2K1210●●**
		5.5 (440)		–	1	**LC2K1201●●**
4	7.5	4 (> 440)	**16**	1	–	**LC2K1610●●**
		5.5 (440)		–	1	**LC2K1601●●**

Spring terminal connections (3)

For 6 to 12 A ratings only, in the references selected above, insert a figure **3** before the voltage code.
Example: **LC2K0610●●** becomes **LC2K06103●●**.

Faston connectors, 1 x 6.35 or 2 x 2.8

For 6 to 16 A ratings, in the references selected above, insert a figure **7** before the voltage code.
Example: **LC2K0610●●** becomes **LC2K06107●●**.

Solder pins for printed circuit boards

For 6 to 16 A ratings, in the references selected above, insert a figure **5** before the voltage code.
Example: **LC2K0610●●** becomes **LC2K06105●●**.

Standard control circuit voltages (for other voltages, please consult your Regional Sales office)

Coil voltage codes - a.c. (4)

Reversing contactors LC2K (0.8…1.15 Uc) *(0.85…1.1 Uc)*

Volts	**12**	**20**	**24** (1)	**36**	**42**	**48**	**110**	**115**	**120**	**127**	**200/208**		***220/230***	**230**	***230/240***
50/60 Hz	J7	Z7	B7	C7	D7	E7	F7	FE7	G7	FC7	L7		*M7*	P7	U7
Volts	**256**	**277**	***380/400***		**400**	***400/415***		**440**	**480**	**500**	**575**	**600**	***660/690***		
50/60 Hz	W7	UE7	Q7		V7	*N7*		R7	T7	S7	SC7	X7	*Y7*		

Up to and including 240 V, coil with integral suppression device available: add **2** to the code required. Example: **J72.**

*(1) For mains supplies with a high level of interference (voltage surge > 800 V), use a suppressor module **LA4KE1FC** (50…129 V) or **LA4KE1UG** (130…250 V), see page B8/14.*
(2) Please check the availability of your variant in the index page B8/55. The SEARCH function of your viewer can be used.
*(3) For **LC●K●●●●3 / LP●K●●●●3** with spring terminal, Ith max = 10 A.*
(4) (0.8…1.15 Uc) for single voltage coil; (0.85…1.1 Uc) for dual voltage coil, exemple 200/208 V AC.

Contactors

Characteristics: pages B8/72 to B8/74
Dimensions: page B8/78
Schemes: page B8/79
Click **HERE** for access to online contactor selector

Reversing contactor selection according to utilisation category, see pages A5/34 to A5/39 and A5/42 to A5/45.
Integral mechanical interlock.
It is essential to link the contacts of the electrical interlock.
Pre-wired power circuit connections as standard on screw clamp versions.
Mounting on 35 mm ⎍ rail or Ø4 screw fixing.
Screws in the open "ready-to-tighten" position.
Add-on auxiliary contact blocks and accessories, see pages B8/13 to B8/15.

3-pole reversing contactors - Motor control 6 to 12 A in categories AC-3 AC-4 - d.c. coil

Standard power ratings of 3-phase motors 50-60 Hz in category AC-3			Rated operational current in category AC-3 440 V up to	Instantaneous auxiliary contacts per contactor		Basic reference, to be completed by adding the voltage code [1] [2]
220 V 230 V	380 V 415 V	440/500 V 660/690 V				
kW	kW	kW	A			
Screw clamp connections						
1.5	2.2	3	6	1	–	**LP2K0610●●**
				–	1	**LP2K0601●●**
2.2	4	4	9	1	–	**LP2K0910●●**
				–	1	**LP2K0901●●**
3	5.5	4 (> 440)	12	1	–	**LP2K1210●●**
		5.5 (440)		–	1	**LP2K1201●●**

Spring terminal connections [3]

In the references selected above, insert a figure **3** before the voltage code.
Example: **LP2K0610●●** becomes **LP2K06103●●**.

Faston connectors, 1 x 6.35 or 2 x 2.8

In the references selected above, insert a figure **7** before the voltage code.
Example: **LC2K0610●●** becomes **LC2K06107●●**.

Solder pins for printed circuit boards

For 6 to 16 A ratings, in the references selected above, insert a figure **5** before the voltage code.
Example: **LC2K0610●●** becomes **LC2K06105●●**.

3-pole low consumption reversing contactors

Compatible with programmable controller outputs.
Wide range coil (0.7…1.30 Uc), suppressor fitted as standard, consumption 1.8 W.

Screw clamp connections						
1.5	2.2	3	6	1	–	**LP5K0610●●**
				–	1	**LP5K0601●●**
2.2	4	4	9	1	–	**LP5K0910●●**
				–	1	**LP5K0901●●**
3	5.5	4 (> 440)	12	1	–	**LP5K1210●●**
		5.5 (440)		–	1	**LP5K1201●●**

Spring terminal connections

In the references selected above, insert a figure **3** before the voltage code.
Example: **LP5K0610●●** becomes **LP5K06103●●**.

Faston connectors, 1 x 6.35 or 2 x 2.8

In the references selected above, insert a figure **7** before the voltage code.
Example: **LP5K0610●●** becomes **LP5K06107●●**.

Solder pins for printed circuit boards

In the references selected above, insert a figure **5** before the voltage code.
Example: **LP5K0610●●** becomes **LP5K06105●●**.

Standard control circuit voltages (for other voltages, please consult your Regional Sales office)

Coil voltage codes - d.c.

Reversing contactors LP2K (0.8…1.15 Uc)

Volts	12	20	24 [1]	36	48	60	72	100	110	125	155	174	200	220	230	240	250
Code	JD	ZD	BD	CD	ED	ND	SD	KD	FD	GD	PD	QD	LD	MD	MPD	MUD	UD

Coil with integral suppression device available: add **3** to the code required. Example: **JD3**.

Coil voltage codes - low consumption d.c.

Reversing contactors LP5K (0.7…1.3 Uc)

Volts	12	20	24	48	72	110	120
Code	JW3	ZW3	BW3	EW3	SW3	FW3	GW3

Coil with integral suppression device fitted as standard, by bi-directional peak limiting diode.

*(1) For **LP2K** only, when connecting an electronic sensor or timer in series with the contactor coil, select a 20 V coil (∿ control circuit voltage code Z7, ⎓ control circuit voltage code ZD) so as to compensate for the incurred voltage drop.*
(2) Please check the availability of your variant in the index page B8/55. The SEARCH function of your viewer can be used.
*(3) For **LC●K●●●●3 / LP●K●●●●3** with spring terminal, Ith max = 10 A.*

Characteristics: pages B8/72 to B8/75
Dimensions: page B8/78
Schemes: page B8/79
Click HERE for access to online contactor selector

PB123784.tif



LC2K0910●●

PB123785.eps



LC2K09105●●

Warning: reversing contactors LC2K0910●● and LC2K0901●● are pre-wired for reverse motor operation as standard.
Reversing contactor selection according to utilisation category, see pages A5/40 and A5/41.
Integral mechanical interlock.
It is essential to link the contacts of the electrical interlock.
Mounting on 35 mm ⎓ rail or Ø4 screw fixing.
Screws in the open “ready-to-tighten” position.
Add-on auxiliary contact blocks and accessories, see pages B8/13 to B8/15.

3 or 4-pole reversing contactors - Load control - 20 A in category AC-1 - a.c. coil (1)

Non-inductive loads Category AC-1 Maximum current at θ ≤ 50 °C	Number of poles		Instantaneous auxiliary contacts per contactor			Basic reference, to be completed by adding the voltage code (2) (3)
						
A						
Screw clamp connections						
20	3	–	1	–		**LC2K0910●●**
					or	**LC2K1210●●**
	3	–	–	1		**LC2K0901●●**
					or	**LC2K1201●●**
	4	–	–	–		**LC2K09004●●**
					or	**LC2K12004●●**

Spring terminal connections (4)

In the references selected above, insert a figure **3** before the voltage code.
Example: **LC2K0910●●** becomes **LC2K09103●●**.

Faston connectors, 1 x 6.35 or 2 x 2.8

In the references selected above, insert a figure **7** before the voltage code.
Example: **LC2K0910●●** becomes **LC2K09107●●**.

Solder pins for printed circuit boards

In the references selected above, insert a figure **5** before the voltage code.
Example: **LC2K0910●●** becomes **LC2K09105●●**.

(1) Coordination tables between 9 and 12 A ratings according to number of operating cycles, see AC-1 curve on page A5/40.

Standard control circuit voltages (for other voltages, please consult your Regional Sales office)

Coil voltage codes - a.c. (5)

Reversing contactors LC2K (0.8…1.15 Uc) *(0.85…1.1 Uc)*

Volts	**12**	**20**	**24** (2)	**36**	**42**	**48**	**110**	**115**	**120**	**127**	**200/208**		***220/230***	***230***	***230/240***
50/60 Hz	J7	Z7	B7	C7	D7	E7	F7	FE7	G7	FC7	L7		*M7*	*P7*	*U7*
Volts	**256**	**277**	***380/400***		**400**	***400/415***		**440**	**480**	**500**	**575**	**600**	***660/690***		
50/60 Hz	W7	UE7	*Q7*		V7	*N7*		R7	T7	S7	SC7	X7	*Y7*		

Up to and including 240 V, coil with integral suppression device available: add **2** to the code required. Example: **J72**.

*(2) For mains supplies with a high level of interference (voltage surge > 800 V), use a suppressor module **LA4KE1FC** (50…129 V) or **LA4KE1UG** (130…250 V), see page B8/14.*
(3) Please check the availability of your variant in the index page B8/55. The SEARCH function of your viewer can be used.
*(4) For **LC●K●●●●3 / LP●K●●●●3** with spring terminal, Ith max = 10 A.*
(5) (0.8…1.15 Uc) for single voltage coil; (0.85…1.1 Uc) for dual voltage coil, exemple 200/208 V AC.

Contactors

Characteristics: pages B8/72 to B8/75
Dimensions: page B8/78
Schemes: page B8/79
Click **HERE** for access to online contactor selector

Warning: reversing contactors LP2K0910●● and LP2K0901●● are pre-wired for reverse motor operation as standard.
Reversing contactor selection according to utilisation category, see pages A5/40 and A5/41.
Integral mechanical interlock.
It is essential to link the contacts of the electrical interlock.
Mounting on 35 mm ⎓ rail or Ø4 screw fixing.
Screws in the open "ready-to-tighten" position.
Add-on auxiliary contact blocks and accessories, see pages B8/13 to B8/15.

3 or 4-pole reversing contactors - Load control - 20 A in category AC-1 - d.c. coil (1)

Non-inductive loads Category AC-1 Maximum current at θ ≤ 50 °C	Number of poles		Instantaneous auxiliary contacts per contactor			Basic reference, to be completed by adding the voltage code (2) (3)
						
A						
Screw clamp connections						
20	3	–	1	–		**LP2K0910●●**
					or	**LP2K1210●●**
	3	–	–	1		**LP2K0901●●**
					or	**LP2K1201●●**
	4	–	–	–		**LP2K09004●●**
					or	**LP2K12004●●**

Spring terminal connections (4)

In the references selected above, insert a figure **3** before the voltage code.
Example: **LP2K0910●●** becomes **LP2K09103●●**.

Faston connectors, 1 x 6.35 or 2 x 2.8

In the references selected above, insert a figure **7** before the voltage code.
Example: **LP2K0910●●** becomes **LP2K09107●●**.

Solder pins for printed circuit boards

In the references selected above, insert a figure **5** before the voltage code.
Example: **LP2K0910●●** becomes **LP2K09105●●**.

3 or 4-pole reversing contactors - 20 A / AC-1 - d.c. low consumption coil (1)

Compatible with programmable controller outputs.
Wide range coil (0.7…1.30 Uc), suppressor fitted as standard, consumption 1.8 W.

Screw clamp connections						
20	3	–	1	–		**LP5K0910●●●**
					or	**LP5K1210●●●**
	3	–	–	1		**LP5K0901●●●**
					or	**LP5K1201●●●**
	4	–	–	–		**LP5K09004●●●**
					or	**LP5K12004●●●**

Spring terminal connections

In the references selected above, insert a figure **3** before the voltage code.
Example: **LP5K0910●●** becomes **LP5K09103●●**.

Faston connectors, 1 x 6.35 or 2 x 2.8

In the references selected above, insert a figure **7** before the voltage code.
Example: **LP5K0910●●** becomes **LP5K09107●●**.

Solder pins for printed circuit boards

In the references selected above, insert a figure **5** before the voltage code.
Example: **LP5K0910●●** becomes **LP5K09105●●**.

(1) Coordination tables between 9 and 12 A ratings according to number of operating cycles, see AC-1 curve on page A5/40.

Standard control circuit voltages (for other voltages, please consult your Regional Sales office)

Coil voltage codes - d.c. (reversing contactors LP2K: 0.8…1.15 Uc)

Volts ⎓	12	20	24 (2)	36	48	60	72	100	110	125	155	174	200	220	230	240	250
Code	JD	ZD	BD	CD	ED	ND	SD	KD	FD	GD	PD	QD	LD	MD	MPD	MUD	UD

Coil with integral suppression device available: add **3** to the code required. Example: **JD3**.

Coil voltage codes - low consumption d.c. (reversing contactors LP5K: 0.7…1.3 Uc)

Volts ⎓	12	20	24	48	72	110	120
Code	JW3	ZW3	BW3	EW3	SW3	FW3	GW3

Coil with integral suppression device fitted as standard, by bi-directional peak limiting diode.
*(2) For **LP2K** only, when connecting an electronic sensor or timer in series with the contactor coil, select a 20 V coil (∿ control circuit voltage code Z7, ⎓ control circuit voltage code ZD) so as to compensate for the incurred voltage drop.*
(3) Please check the availability of your variant in the index page B8/55. The SEARCH function of your viewer can be used.
*(4) For **LC●K●●●●3 / LP●K●●●●3** with spring terminal, Ith max = 10 A.*

Characteristics: pages B8/72 to B8/75
Dimensions: page B8/78
Schemes: page B8/79
Click **HERE** for access to online contactor selector

DB439406.eps

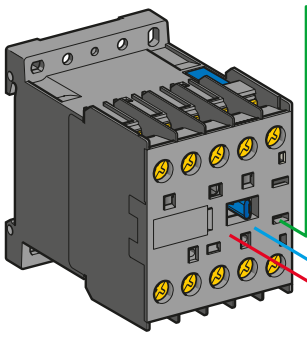

LC1, LC7, LP1 K



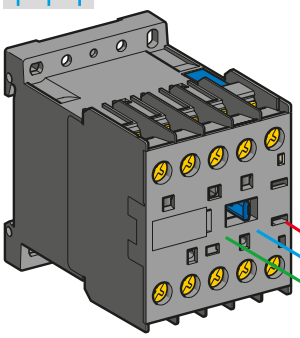

LC1, LC7, LP1 K



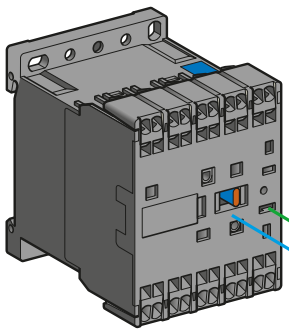

LC1, LP1 K



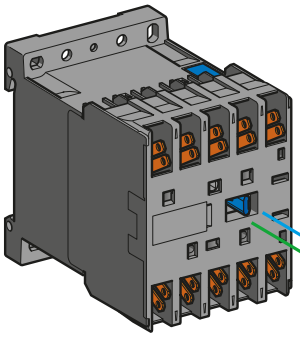

LC1, LC7, LP1 K

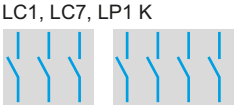

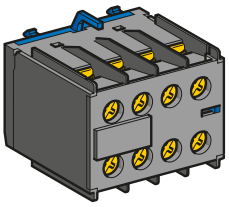

LA1 KN●●M

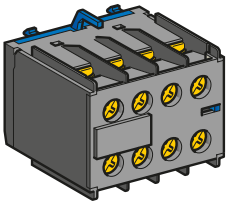

LA1 KN●●

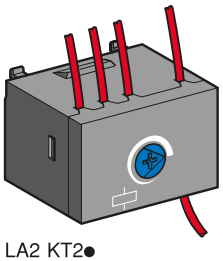

LA2 KT2●

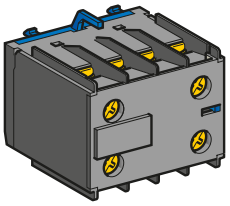

LA1 KN●●P

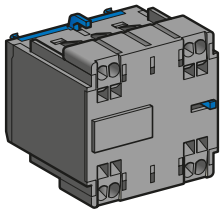

LA1 KN●●3

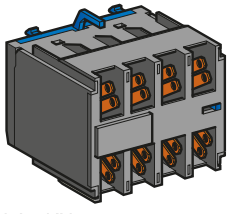

LA1 KN●●7

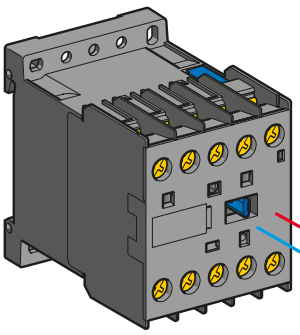

LP4

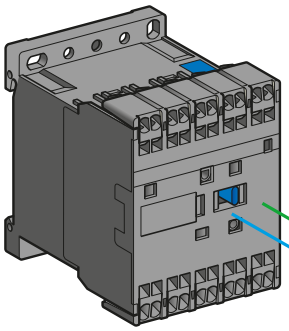

LP4

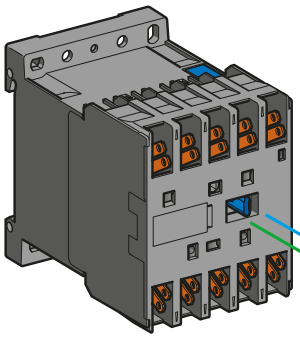

LP4

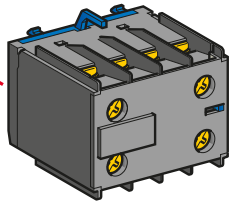

LA1 KN●●

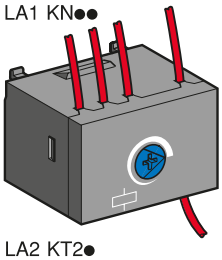

LA2 KT2●

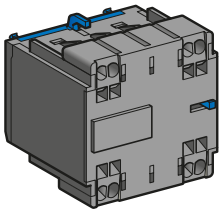

LA1 KN●●3

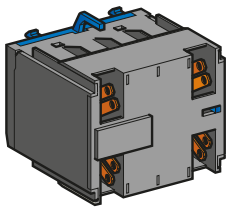

LA1 KN●●7

Life Is On Schneider Electric

Product references

PB121750_R.tif



LA1KN22

PB123817.eps



LA1KN223

PB123818.eps



LA1KN407

Instantaneous auxiliary contact blocks

Recommended for standard applications. Clip-on front mounting, 1 block per contactor

Connection	For use on contactors	Composition		Reference
Screw clamp terminals	All products with screw clamp terminals	2	–	**LA1KN20**
		–	2	**LA1KN02**
		1	1	**LA1KN11**
	All products with screw clamp terminals except low consumption	4	–	**LA1KN40**
		3	1	**LA1KN31**
		2	2	**LA1KN22**
		1	3	**LA1KN13**
		–	4	**LA1KN04**
Spring terminals	All products with spring terminals	2	–	**LA1KN203**
		–	2	**LA1KN023**
		1	1	**LA1KN113**
	All products with spring terminals except low consumption	4	–	**LA1KN403**
		3	1	**LA1KN313**
		2	2	**LA1KN223**
		1	3	**LA1KN133**
		–	4	**LA1KN043**
Faston connectors, 1 x 6.35 or 2 x 2.8	All products with Faston connectors	2	–	**LA1KN207**
	All products with Faston connectors except low consumption	4	–	**LA1KN407**
		3	1	**LA1KN317**

With terminal referencing to standard EN 50012. Clip-on front mounting, 1 block per contactor

Screw clamp terminals with referencing conforming to standard EN 50012	All 3-pole + N/O products with screw clamp terminals except LP4 and LP5K12	–	2	**LA1KN02M**
		1	1	**LA1KN11M**
	All 3-pole + N/O products with screw clamp terminals except LP4 or LP5K06, K09 and K12	3	1	**LA1KN31M**
		2	2	**LA1KN22M**

Electronic time delay auxiliary contact blocks

Relay output with common point changeover contact, ∿ or ⎓ 240 V, 2 A maximum.
Control voltage 0.85…1.1 Uc.
Maximum switching capacity 250 VA or 150 W.
Operating temperature -10…+60 °C.
Reset time: 1.5 s during the time delay period, 0.5 s after the time delay period.

Clip-on front mounting, 1 block per contactor

Voltage	Type	Timing range	Composition	Reference
V		s		
∿ or ⎓ 24…48	On-delay	1…30	1	**LA2KT2E**
∿ 110…240	On-delay	1…30	1	**LA2KT2U**

Contactors

Characteristics: page B8/75
Dimensions: pages B8/76 and B8/78
Schemes: pages B8/77 and B8/79

Product references

PB123798_R.eps



LA4K●●●

References

Mounting and connection	Type	For voltages	Sold in lots of	Unit reference
Clip-on fixing on the front of contactors LC1 and LP1, with locating device. No tools required.	Varistor (1)	∿ and ⎓ 12…24 V	5	**LA4KE1B**
		∿ and ⎓ 32…48 V	5	**LA4KE1E**
		∿ and ⎓ 50…129 V	5	**LA4KE1FC**
		∿ and ⎓ 130…250 V	5	**LA4KE1UG**
	Diode + Zener diode (2)	⎓ 12…24 V	5	**LA4KC1B**
		⎓ 32…48 V	5	**LA4KC1E**
	RC (3)	∿ 110…250 V	5	**LA4KA1U**

(1) Protection provided by limiting the transient voltage to 2 Uc max.
Maximum reduction of transient voltage peaks.
Slight increase in drop-out time (1.1 to 1.5 times the normal time).
(2) No overvoltage or oscillating frequency.
Polarised component.
Slight increase in drop-out time (1.1 to 1.5 times the normal time).
(3) Protection by limiting the transient voltage to 3 Uc max. and limitation of the oscillating frequency.
Slight increase in drop-out time (1.2 to 2 times the normal time).

Characteristics: page B8/75
Dimensions: pages B8/76 and B8/78
Schemes: pages B8/77 and B8/79

Product references

DF566019.eps

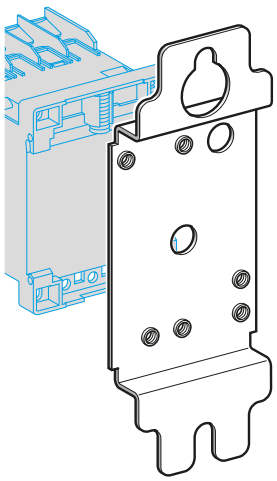

DX1AP25

PB121398.eps



LA9E01

Mounting and marking accessories

Description	Application		Sold in lots of	Unit reference
Mounting plates (1)	For fixing on 2 ⊏⊐ rails	110/120 mm fixing centres	10	**DX1AP25**
Marker holder	Clip-on	Onto front of contactor	100	**LA9D90**
Clip-in markers	4 maximum per contactor	Strips of 10 identical numbers 0…9	25	**AB1R●** (2)
		Strips of 10 identical letters A…Z	25	**AB1G●** (2)

Connection accessories

Description	Application		Sold in lots of	Unit preference
Paralleling links	For 2 poles	With screw clamps	4	**LA9E01**
	For 4 poles	With screw clamps	2	**LA9E02**
Set of 6 power connections	For 3-pole reversing contactors for motor control	For contactors with screw clamp terminals	100	**LA9K0969**

(1) Order 1 mounting plate for fixing a contactor and 2 mounting plates for fixing a reversing contactor.
(2) Complete the reference by replacing the dot with the required character.



Control Panel Technical Guide:
Mounting and wiring accessories for TeSys K, Deca, F contactors. Star-delta, reverser, low-high speed control motor starters and changeover applications - Product references and details on all kits and wiring accessories.

> Ref. Document: CPTG011_EN

> Click on QR code to download

Dimensions:
pages B8/76 and B8/78

Deca green, enriching Deca family

Deca conventional contactors 9 to 150 A, for motor control and other applications.

Deca green delivers a consistent low consumption range of contactors from 9 A to 80 A, covering control voltage from 24 to 250 V, with same coils for AC and DC.





When implemented with other Schneider Electric products*, Deca green contactors are part of a comprehensive solution that is ideal for all types of industrial machines and processes.



Deca Overload relay

By combining a Deca green contactor with our new Deca electronic overload relay, you will have less heat generation, and further reduce energy consumption.



* such as PLC I/O type M580, M340, M221 or M241 or extended I/O type Advantys STB range, or in association with Deca electronic overload relays or Tera Motor management system.



Highly competitive coil consumption

Small changes can generate big savings. The new Deca green contactor is equipped with an innovative electronic coil. These electronic-coil contactors require **up to 80 % less energy** than electro-mechanical contactors.This innovation results in concrete values: for example, large plants can noticeably reduce their energy bills and heat dissipation in cabinet.

Available in → 09-12-18 A 25-32-38 A 40-50-65-80 A

Coil currents comparison

Deca green contactors (AC/DC coil) vs Deca contactors (AC, DC coils)

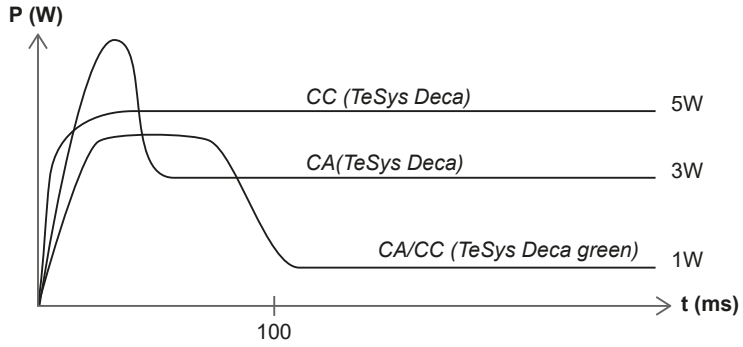

Deca green brings a significant reduction of energy consumption.

Deca green contactors ("BBE" coil) vs Deca contactors (low consumption "BL" coil)

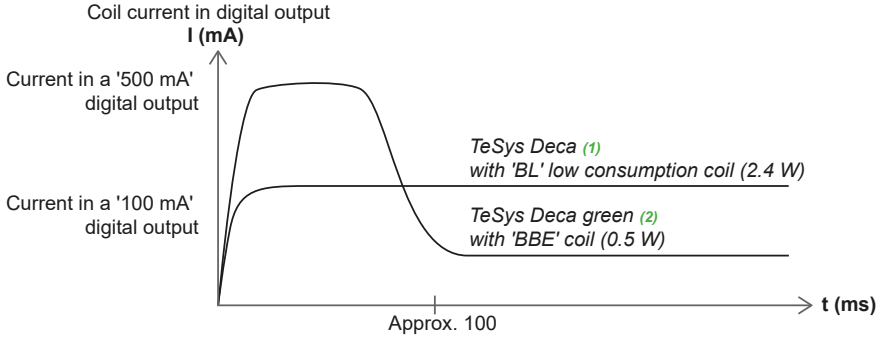

(1) Up to 38 A.
(2) 40 to 80 A.

Deca green contactor is well adapted to direct control by PLC static outputs, even in its high ratings.

Product references

PB121708.tif



LC1D09●●●

PB121710.tif



LC1D40A●●●

Deca green contactors have a dark grey casing and a 3-character code voltage.

3-pole contactors - Motor control up to 37 kW / 400 V - Category AC-3

Standard power ratings of 3-phase motors 50-60 Hz in category AC-3 (θ ≤ 60 °C)						Rated operational current in AC-3 440 V up to	Instantaneous auxiliary contacts		Basic reference, to be completed by adding the control voltage code [1] / Fixing [2]	Weight
220 V 230 V	380 V 400 V	415 V	440 V	500 V	660 V 690 V					
kW	kW	kW	kW	kW	kW	A				kg
Connection by screw clamp terminals										
2.2	4	4	4	5.5	5.5	9	1	1	**LC1D09●●●**	0.368
3	5.5	5.5	5.5	7.5	7.5	12	1	1	**LC1D12●●●**	0.373
4	7.5	9	9	10	10	18	1	1	**LC1D18●●●**	0.378
5.5	11	11	11	15	15	25	1	1	**LC1D25●●●**	0.433
7.5	15	15	15	18.5	18.5	32	1	1	**LC1D32●●●**	0.438
9	18.5	18.5	18.5	18.5	18.5	38	1	1	**LC1D38●●●**	0.442
Power connections by EverLink® BTR [3] screw connectors and control by screw clamp terminal										
11	18.5	22	22	22	30	40	1	1	**LC1D40A●●●**	0.992
15	22	25	30	30	33	50	1	1	**LC1D50A●●●**	0.997
18.5	30	37	37	37	37	65	1	1	**LC1D65A●●●**	1.002
22	37	37	37	37	37	66	1	1	**LC1D80A●●●**	1.002

Connection for lugs or bars

For LC1D40A to LC1D80A, insert a figure 6 before the voltage code.
Example: LC1D40A●●● becomes LC1D40A6●●●

Auxiliary contact blocks and add-on modules

See pages B8/36 to B8/42.

Control voltage codes

AC/DC or 24 V DC supply

Volts	24 (DC only)	24-60	48-130	100-250
LC1D09 ...D38, LC1D40A ... D80A				
U 0.85...1.1 Uc		BNE	EHE	KUE
LC1D09 ... D38				
U 0.8 ... 1.2 Uc	BNE			
LC1D40A ... D80A				
U 0.8…1.2 Uc	BBE			

(1) Please check the availability of your variant in the index page B8/55. The SEARCH function of your viewer can be used.
*(2) **LC1D09** to **D80A**: clip-on mounting on 35 mm ⊔ rail **NSYSDR** or screw fixing.*
(3) BTR screws: hexagon socket head. In accordance with local electrical wiring regulations, a size 4 insulated Allen key must be used (reference LADALLEN4, see B8/42).

Contactors

Characteristics: pages B8/80 to B8/87
Curves: page B8/90
Dimensions: pages B8/98 to B8/100
Schemes: pages B8/101 and B8/102
Click **HERE** for access to online contactor selector

Product references

PB121708.tif



LC1D09●●●

PB121710.tif



LC1D40A●●●

PB121712.eps



LC1DT60A●●●

Deca green contactors have a dark grey casing and a 3-character code voltage.

3-pole contactors - Load control from 25 to 80 A - Category AC-1

Non inductive loads maximum current ($\theta \leq 60$ °C) utilisation category AC-1	Number of poles	Instantaneous auxiliary contacts		Partial reference, to be completed by adding the control voltage code (1) / Fixing (2)	Weight
A					kg
Connection by screw clamp terminals					
25	3	1	1	**LC1D09●●●**	0.368
				or **LC1D12●●●**	0.373
32	3	1	1	**LC1D18●●●**	0.378
40	3	1	1	**LC1D25●●●**	0.433
50	3	1	1	**LC1D32●●●**	0.438
				or **LC1D38●●●**	0.442
Connection by EverLink®, BTR screw connectors (3)					
60	3	1	1	**LC1D40A●●●**	0.992
80	3	1	1	**LC1D50A●●●**	0.997
				or **LC1D65A●●● (4)**	1.002
				or **LC1D80A●●● (4)**	1.002
Connection for lugs or bars					
For LC1D40A to LC1D80A, insert a figure 6 before the voltage code. Example: LC1D40A●●● becomes LC1D40A6●●●					
4-pole contactors					
Connection by EverLink®, BTR (3) screw connectors					
60	4	1	1	**LC1DT60A●●●**	1.230
80	4	1	1	**LC1DT80A●●●**	1.290
Connection for lugs or bars					
For LC1DT60A to LC1DT80A, insert a figure 6 before the voltage code. Example: LC1DT60A●●● becomes LC1DT60A6●●●					
4-pole changeover contactors					
Connection by EverLink®, BTR (3) screw connectors					
60	4	1	1	**LC2DT60A●●●**	2.460
80	4	1	1	**LC2DT80A●●●**	2.580

Control voltage codes

AC/DC 24 V DC supply

Volts	24 (DC only)	24-60	48-130	100-250
LC1D09…D80A and LC●DT60A...DT80A				
U 0.85 .... 1.1 Uc		BNE	EHE	KUE
LC1D09 .... D38				
U 0.8 .... 1.2 Uc	BNE			
LC1D40 to LC1D80A, LC●DT60A to LC●DT80A				
U 0.8…1.2 Uc	BBE			

(1) Please check the availability of your variant in the index page B8/55. The SEARCH function of your viewer can be used.
*(2) **LC1D09** to **D80A**, **LC●DT60A** and **LC●DT80A**: clip-on mounting on 35 mm ⊥ rail **NSYSDR** or screw fixing.*
*(3) BTR screws: hexagon socket head. In accordance with local electrical wiring regulations, a size 4 insulated Allen key must be used (reference **LADALLEN4**, see page B8/42).*
(4) Coordination tables according to the number of operation cycles, consult online datasheets for values.

Contactors

Characteristics: pages B8/80 to B8/87
Curves: page B8/90
Dimensions: pages B8/98 to B8/100
Schemes: pages B8/101 and B8/102
Click **HERE** for access to online contactor selector

Product references

PB121708.tif



LC1D09●●●

PB121710.tif



LC1D40A●●●

Deca green contactors have a dark grey casing and a 3-character code voltage.

3-pole contactors conforming to UL and CSA standards (North American market) - 25 to 80 A

Standard power ratings of motors 50/60 Hz						Associated cable type 75 °C-Cu	Continuous current	Type of contactor required Partial reference, to be completed by adding the control voltage code [1]
Single-phase 1 Ø		3-phase 3 Ø						Fixing, connection [2]
115 V	230 V 240 V	200 V 208 V	230 V 240 V	460 V 480 V	575 V 600 V			
HP	HP	HP	HP	HP	HP		A	
Connection by screw clamp terminals								
1/3	1	2	2	5	7.5	AWG 18 - 10	25	**LC1D09●●●**
0.5	2	3	3	7.5	10	AWG 18 - 10	25	**LC1D12●●●**
1	3	5	5	10	15	AWG 18 - 8	32	**LC1D18●●●**
2	3	7.5	7.5	15	20	AWG 14 - 6	40	**LC1D25●●●**
2	5	10	10	20	25	AWG 14 - 6	50	**LC1D32●●●**
Power connections by EverLink® BTR [3] screw connectors and control by spring terminals								
3	5	10	10	30	30	AWG 16 - 2	60	**LC1D40A●●●**
3	7.5	15	15	40	40	AWG 16 - 2	70	**LC1D50A●●●**
5	10	20	20	40	50	AWG 16 - 2	80	**LC1D65A●●●**
5	10	20	20	40	50	AWG 16 - 2	80	**LC1D80A●●●**
Connection for lugs or bars								

For LC1D40A to LC1D80A, insert a figure 6 before the voltage code.
Example: LC1D40A●●● becomes LC1D40A6●●●

Applications with High-Fault Short-Circuit Current ratings

High-fault short-circuit current ratings are: 100 kA at 600 V with Class J fuses and 85 kA (D09-38), 100 kA (D40A-65A) at 480 V and 50 kA at 600 V with circuit breakers.

Control voltage codes

AC/DC 24 V DC supply

Volts	24 (DC only)	24-60	48-130	100-250
LC1D09 ... D32, LC1D40A ... D80A				
U 0.85 .... 1.1 Uc		BNE	EHE	KUE
LC1D09 ... D38				
U 0.8 .... 1.2 Uc	BNE			
LC1D40A ... D80A				
U 0.8…1.2 Uc	BBE			

(1) Please check the availability of your variant in the index page B8/55. The SEARCH function of your viewer can be used.
*(2) **LC1D09** to **D80**: clip-on mounting on 35 mm ⊔ rail **NSYSDR** or screw fixing.*
*(3) BTR screws: hexagon socket head. In accordance with local electrical wiring regulations, a size 4 insulated Allen key must be used (reference **LADALLEN4**, see page B8/42).*

Contactors

Characteristics: pages B8/80 to B8/87
Curves: page B8/90
Dimensions: pages B8/98 to B8/100
Schemes: pages B8/101 and B8/102
Click **HERE** for access to online contactor selector

Deca green contactors - Coordination with PLC output modules (static/relay/triac)

Selection of PLC coordinated contactors

Laboratory tests have been carried out in order to validate trouble free contactor closings and openings with different PLC output modules.
The coil must be defined according to the contactor rating range and output module.
See selection table below.

The PLC your are using				>>>	Compatible contactors (1)	Coil code
PLC type	**Output type**	**Output I (A)**	**Output module commercial reference**			
M221 / M241 / M251	Static output: 24 V DC	0.5	TM3DQ8●●● and Q16●●● (T, TG, U, UG)	>>>	LC1D09●● to LC1D38●●,	BL, BNE
					LC1D40A●●● to LC1D80A, LC1DT60A●●● to LC1DT80A●●●	BBE
		0.3 (sealed) 0.8 (inrush)	TM3XTYS4	>>>	LC1D40A●●● to LC1D80A, LC1DT60A●●● to LC1DT80A●●●	BBE, BD, BNE
		0.1	TM3DQ16●● and Q32●● (TK, UK)	>>>	LC1D09●● to LC1D38●●	BL
	Relay output: 24 V DC / 230 V AC	2	TM3DQ8 and DQ16 (R,RG), TM3DM8 and DM24 (R,RG)	>>>	LC1D09●● to LC1D38●●, LC1D40A●●● to LC1D80A, LC1DT60A●●● to LC1DT80A●●●	Code of any DC coil up to 24 V or any AC coil up to 230 V
M340 / M580	Static output: 24 V DC	0.5	BMXDDO1602 and DM16022	>>>	LC1D09●● to LC1D38●●	BL, BNE
					LC1D40A●●● to LC1D80A, LC1DT60A●●● to LC1DT80A●●●	BBE
		0.1	BMXDDO3202, BMXDDM3202K, BMXDDO6402K	>>>	LC1D09●● to LC1D38●●	BL
	Relay output: 24 V DC / 230 V AC	2	BMXDRA0805 and DM16025	>>>	LC1D09●● to LC1D38●●, LC1D40A●●● to LC1D80A, LC1DT60A●●● to LC1DT80A●●●	Code of any DC coil up to 24 V or any AC coil up to 230 V
	Triac output: 230 V AC	0.6	BMXDAO1605	>>>	LC1D09●● to LC1D38●●, LC1D40●●● to LC1D80A●●●, LC1DT60A●●● to LC1DT80A●●●	Code of any AC coil up to 230 V (P7 code = 230 V)
ADVANTYS	Static output: 24 V DC	0.5	STBDDO3200	>>>	LC1D09●● to LC1D38●●	BL, BNE
					LC1D40A●●● to LC1D80A, LC1DT60A●●● to LC1DT80A●●●	BBE
	Triac output: 230 V AC	2	STBDAO8210	>>>	LC1D09●● to LC1D38●●, LC1D40A●●● to LC1D80A, LC1DT60A●●● to LC1DT80A●●●	Code of any AC coil up to 230 V (P7 code = 230 V AC)

Coils consumption characteristics

Coil type	Uc DC - min -max	Average consumption at UC DC / 20 °C	
		Inrush	Sealed
BL	24 V - 0.8 Uc to 1.1 Uc	2.4 W - 2.4 VA	2.4 W - 2.4 VA
BNE		14 W - 14 VA	0.7 W - 0.7 VA
BBE		11 W - 11 VA	0.5 W - 0.5 VA

*(1) Replace dot by coil code. Ex **LC1D09●●** becomes **LC1D09BL**.*

PB121681.eps



LC1D09●●

PB121706.tif



LC1D25●●

PB121707.tif



LC1D80A●●

PB123774.tif



LC1D95●●

PB123775.tif



LC1D115●●

3-pole contactors - Motor control up to 75 kW at 400 V, in category AC-3

Standard power ratings of 3-phase motors 50-60 Hz in category AC-3 (θ ≤ 60 °C)							Rated operational current in AC-3 440 V up to	Instantaneous auxiliary contacts		Basic reference, to be completed by adding the control voltage code [1] / Fixing [2]	Weight [3]
220 V 230 V	380 V 400 V	415 V	440 V	500 V	660 V 690 V	1000 V					
kW	kW	kW	kW	kW	kW	kW	A				kg
Connection by screw clamp terminals											
2.2	4	4	4	5.5	5.5	–	9	1	1	**LC1D09●●**	0.320
3	5.5	5.5	5.5	7.5	7.5	–	12	1	1	**LC1D12●●**	0.325
4	7.5	9	9	10	10	–	18	1	1	**LC1D18●●**	0.330
5.5	11	11	11	15	15	–	25	1	1	**LC1D25●●**	0.370
7.5	15	15	15	18.5	18.5	–	32	1	1	**LC1D32●●**	0.375
9	18.5	18.5	18.5	18.5	18.5	–	38	1	1	**LC1D38●●**	0.380
Power connections by EverLink® BTR screw connectors [4] and control by screw clamp terminal											
11	18.5	22	22	22	30	–	40	1	1	**LC1D40A●●**	0.850
15	22	25	30	30	33	–	50	1	1	**LC1D50A●●**	0.855
18.5	30	37	37	37	37	–	65	1	1	**LC1D65A●●**	0.860
22	37	37	37	37	37	–	66	1	1	**LC1D80A●●**	0.860
Connection by screw clamp terminals or connectors											
22	37	45	45	55	45	45	80	1	1	**LC1D80●●**	1.590
25	45	45	45	55	45	45	95	1	1	**LC1D95●●**	1.610
30	55	59	59	75	80	65	115	1	1	**LC1D115●●**	2.500
40	75	80	80	90	100	75	150	1	1	**LC1D150●●**	2.500

Connection by lugs or bars

In the references selected above, insert a figure **6** before the voltage code.
Example: **LC1D09●●** becomes **LC1D096●●**.

Separate components

Auxiliary contact blocks and add-on modules: see pages B8/36 to B8/42.

Standard control circuit voltages (for other voltages, please consult your Regional Sales Office)

a.c. supply

Volts	24	42	48	110	115	220	230	240	380	400	415	440	500
LC1D09…D150 (D115 and D150 coils with built-in suppression as standard, by bi-directional peak limiting diode).													
50/60 Hz	B7	D7	E7	F7	FE7	M7	P7	U7	Q7	V7	N7	R7	S7
LC1D09…D65 (not available with "connection for lugs or bars")													
50 Hz	B5	D5	E5				P5						
LC1D80…D115													
50 Hz	B5	D5	E5	F5	FE5	M5	P5	U5	Q5	V5	N5	R5	S5
60 Hz	B6	–	E6	F6	–	M6	–	U6	Q6	–	–	R6	–

d.c. supply

Volts	12	24	36	48	60	72	110	125	220	250	440
LC1D09…D38 (coils with integral suppression device fitted as standard, by bi-directional peak limiting diode)											
U 0.7…1.25 Uc	JD	BD	CD	ED	ND	SD	FD	GD	MD	UD	RD
LC1D40A …D65A (coils with integral suppression device fitted as standard, by bi-directional peak limiting diode)											
U 0.75…1.25 Uc	JD	(5)	(5)	(5)	(5)	(5)	(5)	(5)	(5)	(5)	RD
LC1D80…D95											
U 0.85…1.1 Uc	JD	BD	CD	ED	ND	SD	FD	GD	MD	UD	RD
U 0.75…1.2 Uc	JW	BW	CW	EW	–	SW	FW	–	MW	–	–
LC1D115 and D150 (coil with built-in suppression device as standard)											
U 0.75…1.2 Uc	–	BD	–	ED	ND	SD	FD	GD	MD	UD	RD

Low consumption DC (for low consumption AC/DC: Deca green contactors, page B8/18)

Volts ⎓	5	12	20	24	48	110	220	250
LC1D09…D38 (coils with integral suppression device fitted as standard, by bi-directional peak limiting diode)								
U 0.8…1.25 Uc	AL	JL	ZL	BL	EL	FL	ML	UL

For other voltages between 5 and 690 V, see pages B8/45 to B8/48.

(1) Please check the availability of your variant in the index page B8/55. The SEARCH function of your viewer can be used.

(2) LC1D09 to D80A: clip-on mounting on 35 mm ⊔ rail NSYSDR *or screw fixing.*
LC1D80 to D95 ∿: clip-on mounting on 35 mm ⊔ rail NSYSDR *or 75 mm ⊔ rail AM1DL or screw fixing.*
LC1D80 to D95 ⎓: clip-on mounting on 75 mm ⊔ rail AM1DL or screw fixing.
LC1D115 and D150: clip-on mounting on 2 x 35 mm ⊔ rails NSYSDR *or screw fixing.*

*(3) The weights indicated are for contactors with a.c. control circuit. For d.c. or low consumption control circuit, add 0.160 kg from **LC1D09** to **D38**, 0.075 kg from **LC1D40A** to **D80A** and 1 kg for **LC1D80** and **D95**.*

*(4) BTR screws: hexagon socket head. In accordance with local electrical wiring regulations, a size 4 insulated Allen key must be used (reference **LADALLEN4**, see page B8/42).*

*(5) For these coil voltages, choose from Deca green contactors. Same product ref. radical, just add BBE coil voltage code for 24 V DC, BNE for 24-60V AC/DC, EHE for 48-130 V AC/DC, KUE for 100-250 V AC/DC. Exemple: **LC1D40ABBE**.*

Characteristics: pages B8/80 to B8/87
Dimensions: pages B8/94 to B8/97
Schemes: pages B8/101 to B8/102
Click **HERE** for access to online contactor selector

PB121713.tif



LC1D123●●

PB121723.eps



LC1D80A3●●

3-pole contactors - Motor control up to 30 kW at 400 V, in category AC-3

Standard power ratings of 3-phase motors 50-60 Hz in category AC-3 (θ ≤ 60 °C)							Rated operational current in AC-3 440 V up to	Instan-taneous auxiliary contacts		Basic reference, to be completed by adding the control voltage code [1]
220 V 230 V	380 V 400 V	415 V	440 V	500 V	660 V 690 V	1000 V				Fixing [2]
kW	kW	kW	kW	kW	kW	kW	A			
Power and control connections by spring terminals										
2.2	4	4	4	5.5	5.5		9	1	1	**LC1D093●●**
3	5.5	5.5	5.5	7.5	7.5		12	1	1	**LC1D123●●**
4	7.5	9	9	10	10		18	1	1	**LC1D183●●**
5.5	11	11	11	15	15		25	1	1	**LC1D253●●**
7.5	15	15	15	18.5	18.5		32 [3]	1	1	**LC1D323●●**
Power connections by EverLink® BTR screw connectors [4] and control by spring terminals										
11	18.5	22	22	22	30		40	1	1	**LC1D40A3●●**
15	22	25	30	30	33		50	1	1	**LC1D50A3●●**
18.5	30	37	37	37	37		65	1	1	**LC1D65A3●●**
22	37	37	37	37	37		66	1	1	**LC1D80A3●●**

Connection by Faston connectors

These contactors are fitted with Faston connectors: 2 x 6.35 mm on the power poles and 1 x 6.35 mm on the coil and auxiliary terminals.
For contactors LC1D09 and LC1D12 only, replace the figure **3** with a **9** in the references selected above.
Example: **LC1D093●●** becomes **LC1D099●●**.

Separate components

Auxiliary contact blocks and add-on modules: see pages B8/36 to B8/42.

Standard control circuit voltages (for other voltages, please consult your Regional Sales Office)

a.c. supply												
Volts	**24**	**42**	**48**	**110**	**115**	**220**	**230**	**240**	**380**	**400**	**415**	**440**
LC1D09…D80A												
50/60 Hz	B7	D7	E7	F7	FE7	M7	P7	U7	Q7	V7	N7	R7
d.c. supply												
Volts	**12**	**24**	**36**	**48**	**60**	**72**	**110**	**125**	**220**	**250**	**440**	
LC1D09…D32 (coils with integral suppression device fitted as standard, by bi-directional peak limiting diode)												
U 0.7…1.25 Uc	JD	BD	CD	ED	ND	SD	FD	GD	MD	UD	RD	
LC1D40A…D65A (coils with integral suppression device fitted as standard, by bi-directional peak limiting diode)												
U 0.75…1.25 Uc	JD	BD	CD	ED	ND	SD	FD	GD	MD	UD	RD	
Low consumption												
Volts ⎓	**5**	**12**	**20**	**24**	**48**	**110**	**220**	**250**				
LC1D09…D32 (coils with integral suppression device fitted as standard, by bi-directional peak limiting diode)												
U 0.8…1.25 Uc	AL	JL	ZL	BL	EL	FL	ML	UL				

For other voltages between 5 and 690 V, see pages B8/45 to B8/48.

(1) Please check the availability of your variant in the index page B8/55. The SEARCH function of your viewer can be used.

(2) LC1D09 to D32: clip-on mounting on 35 mm ⊔ rail NSYSDR or screw fixing.

*(3) Must be wired with 2 x 4 mm² cables in parallel on the upstream side. On the downstream side, outgoing terminal block **LAD331** may be used (Quickfit technology, see page B1/18). When wired with a single cable, the product is limited to 25 A (11 kW/400 V motors).*

*(4) BTR screws: hexagon socket head. In accordance with local electrical wiring regulations, a size 4 insulated Allen key must be used (reference **LADALLEN4**, see page B8/42).*

Contactors

PB121681.eps



LC1D09●●

PB121723.eps



LC1D80A●●

3-pole contactors - Load control from 25 to 200 A in category AC-1

Non inductive loads maximum current ($\theta \leq 60$ °C) utilisation category AC-1	Number of poles	Instantaneous auxiliary contacts		Basic reference, to be completed by adding the control voltage code (1) / Fixing (2)	Weight (3)
A					kg
Connection by screw clamp terminals					
25	3	1	1	**LC1D09●●**	0.320
				or **LC1D12●●**	0.325
32	3	1	1	**LC1D18●●**	0.330
40	3	1	1	**LC1D25●●**	0.370
50	3	1	1	**LC1D32●●**	0.375
				or **LC1D38●●**	0.380
Connection by EverLink®, BTR screw connectors (4)					
60	3	1	1	**LC1D40A●●**	0.850
80	3	1	1	**LC1D50A●●**	0.855
				or **LC1D65A●●** (5)	0.860
				or **LC1D80A●●** (5)	0.860
Connection by screw clamp terminals or connectors					
125	3	1	1	**LC1D80●●**	1.590
				or **LC1D95●●** (5)	1.610
200	3	1	1	**LC1D115●●**	2.500
				or **LC1D150●●** (6)	2.500

3-pole contactors for connection by lugs

In the references selected above, insert a figure **6** before the voltage code.
Example: **LC1D09●●** becomes **LC1D096●●**.

Standard control circuit voltages
(for other voltages, please consult your Regional Sales Office)

a.c. supply

Volts	24	42	48	110	115	220	230	240	380	400	415	440	500
LC1D09...D150 (LC1D115 and D150 coils with built-in suppression device as standard)													
50/60 Hz	B7	D7	E7	F7	FE7	M7	P7	U7	Q7	V7	N7	R7	S7
LC1D09…D65 (not available with "connection for lugs or bars")													
50 Hz	B5	D5	E5				P5						
LC1D80...D150													
50 Hz	B5	D5	E5	F5	FE5	M5	P5	U5	Q5	V5	N5	R5	S5
60 Hz	B6	–	E6	F6	–	M6	–	U6	Q6	–	–	R6	–

d.c. supply

Volts	12	24	36	48	60	72	110	125	220	250	440
LC1D09…D38 (coils with integral suppression device fitted as standard, by bi-directional peak limiting diode)											
U 0.7…1.25 Uc	JD	BD	CD	ED	ND	SD	FD	GD	MD	UD	RD
LC1D40A …D65A (coils with integral suppression device fitted as standard, by bi-directional peak limiting diode)											
U 0.75…1.25 Uc	JD	(7)	(7)	(7)	(7)	(7)	(7)	(7)	(7)	(7)	RD
LC1 or LP1D80 and **D95**											
U 0.85…1.1 Uc	JD	BD	CD	ED	ND	SD	FD	GD	MD	UD	RD
U 0.75…1.2 Uc	JW	BW	CW	EW	–	SW	FW	–	MW	–	–
LC1D115 and **D150** (coils with built-in suppression device fitted as standard)											
U 0.75…1.2 Uc	–	BD	–	ED	ND	SD	FD	GD	MD	UD	RD

Low consumption

Volts ⎓	5	12	20	24	48	110	220	250
LC1D09…D38 (coils with integral suppression device fitted as standard, by bi-directional peak limiting diode)								
U 0.8…1.25 Uc	AL	JL	ZL	BL	EL	FL	ML	UL

For other voltages between 5 and 690 V, see pages B8/45 to B8/48.

*(1) **Please check the availability of your variant in the index page B8/55. The SEARCH function of your viewer can be used.***

*(2) **LC1D09** to **D80A**: clip-on mounting on 35 mm ⊔ rail **NSYSDR** or screw fixing.*
***LC1D80** and **D95** ∿: clip-on mounting on 35 mm ⊔ rail **NSYSDR** or 75 mm ⊔ rail **AM1DL** or screw fixing.*
***LC1** or **LP1D80** to **D95** ⎓: clip-on mounting on 75 mm ⊔ rail **AM1DL** or screw fixing.*
***LC1D115** and **D150**: clip-on mounting on 2 x 35 mm ⊔ rails **NSYSDR** or screw fixing.*

*(3) The weights indicated are for contactors with a.c. control circuit. For d.c. or low consumption control circuit, add 0.160 kg from **LC1D09** to **D38**, 0.075 kg from **LC1D40A** to **D80A** and 1 kg for **LC1D80** and **D95**.*

*(4) BTR screws: hexagon socket head. In accordance with local electrical wiring regulations, a size 4 insulated Allen key must be used (reference **LADALLEN4**, see page B8/42).*

(5) Coordination tables according to the number of operating cycles, see AC-1 curve, page A5/40.

(6) 32 A with 2 x 4 mm² cables connected in parallel.

*(7) For these coil voltages, choose from Deca green contactors. Same product ref. radical, just add BBE coil voltage code for 24 V DC, BNE for 24-60 V AC/DC, EHE for 48-130 V AC/DC, KUE for 100-250 V AC/DC. Exemple: **LC1D40ABBE**.*

Product references

PB121713.tif



LC1D123●●

PB121723.eps



LC1D80A3●●

3-pole contactors - Load control from 16 to 80 A in category AC-1

Non inductive loads maximum current (θ ≤ 60 °C) utilisation category AC-1	Number of poles	Instantaneous auxiliary contacts		Basic reference, to be completed by adding the control voltage code (1) / Fixing (2)	Weight (3)
A					kg
Connection by spring terminals					
16	3	1	1	**LC1D093●●** (4)	0.320
			or	**LC1D123●●** (4)	0.325
25	3	1	1	**LC1D183●●** (5)	0.335
			or	**LC1D253●●** (6)	0.325
			or	**LC1D323●●** (6)	0.325
Power connections by EverLink® BTR screw connectors (7) and control by spring terminals					
60	3	1	1	**LC1D40A3●●**	0.850
80	3	1	1	**LC1D50A3●●** (8)	0.855
			or	**LC1D65A3●●** (8)	0.860
			or	**LC1D80A3●●** (8)	0.860

3-pole contactors for connection by Faston connectors

These contactors are fitted with Faston connectors: 2 x 6.35 mm on the power poles and 1 x 6.35 mm on the coil terminals. For contactors LC1D09 and LC1D12 only, in the references selected from the previous page, insert a figure **9** before the voltage code. Example: **LC1D09●●** becomes **LC1D099●●**.

Separate components

Auxiliary contact blocks and add-on modules: see pages B8/36 to B8/42.

Standard control circuit voltages
(for other voltages, please consult your Regional Sales Office)

a.c. supply													
Volts	**24**	**42**	**48**	**110**	**115**	**220**	**230**	**240**	**380**	**400**	**415**	**440**	**500**
LC1D09...D80A													
50/60 Hz	B7	D7	E7	F7	FE7	M7	P7	U7	Q7	V7	N7	R7	S7

d.c. supply												
Volts	**12**	**24**	**36**	**48**	**60**	**72**	**110**	**125**	**220**	**250**	**440**	
LC1D09…D32 (coils with integral suppression device fitted as standard, by bi-directional peak limiting diode)												
U 0.7…1.25 Uc	JD	BD	CD	ED	ND	SD	FD	GD	MD	UD	RD	
LC1D40A…D65A (coils with integral suppression device fitted as standard, by bi-directional peak limiting diode)												
U 0.75…1.25 Uc	JD	BD	CD	ED	ND	SD	FD	GD	MD	UD	RD	

Low consumption								
Volts ⎓	**5**	**12**	**20**	**24**	**48**	**110**	**220**	**250**
LC1D09…D32 (coils with integral suppression device fitted as standard, by bi-directional peak limiting diode)								
U 0.8…1.25 Uc	AL	JL	ZL	BL	EL	FL	ML	UL

For other voltages between 5 and 690 V, see pages B8/45 to B8/48.

*(1) **Please check the availability of your variant in the index page B8/55. The SEARCH function of your viewer can be used.***

*(2) **LC1D09** to **D80A**: clip-on mounting on 35 mm ⊥⌐ rail **NSYSDR** or screw fixing.*

*(3) The weights indicated are for contactors with a.c. control circuit. For d.c. or low consumption control circuit, add 0.160 kg from **LC1D09** to **D38** and 0.075 kg from **LC1D40A** to **D80A**.*

(4) 20 A with 2 x 2.5 mm² cables connected in parallel.

(5) 32 A with 2 x 4 mm² cables connected in parallel.

(6) 40 A with 2 x 4 mm² cables connected in parallel.

*(7) BTR screws: hexagon socket head. In accordance with local electrical wiring regulations, a size 4 insulated Allen key must be used (reference **LADALLEN4**, see page B8/42).*

(8) Coordination tables according to the number of operating cycles, see AC-1 curve, page A5/40.

Contactors

PB121714.tif



LC1DT20●●

PB121715.tif



LC1DT80A●●

PB123776.eps



LC1D65008●●

4-pole contactors - Load control, 20 to 200 A in category AC-1

Non inductive loads maximum current (θ ≤ 60 °C) utilisation category AC-1	Number of poles		Instantaneous auxiliary contacts		Basic reference, to be completed by adding the control voltage code (1) / Fixing (2)	Weight (3)
A						kg
Connection by screw clamp terminals						
20	4	–	1	1	**LC1DT20●●**	0.365
	2	2	1	1	**LC1D098●●**	0.365
25	4	–	1	1	**LC1DT25●●**	0.365
	2	2	1	1	**LC1D128●●**	0.365
32	4	–	1	1	**LC1DT32●●**	0.425
	2	2	1	1	**LC1D188●●**	0.425
40	4	–	1	1	**LC1DT40●●**	0.425
	2	2	1	1	**LC1D258●●**	0.425
Connection by EverLink®, BTR screw connectors						
60	4	–	1	1	**LC1DT60A●●**	1.090
80	4	–	1	1	**LC1DT80A●●**	1.150
Connection by screw clamp terminals or connectors						
60	2	2	–	–	**LC1D40008●●**	1.440
					or **LP1D40008●●**	2.210
80	2	2	–	–	**LC1D65008●●**	1.450
					or **LP1D65008●●**	2.220
125	4	–	–	–	**LC1D80004●●**	1.760
					or **LP1D80004●●**	2.685
	2	2	–	–	**LC1D80008●●**	1.840
					or **LP1D80008●●**	2.910
200	4	–	–	–	**LC1D115004●●**	2.860

4-pole contactors for connection by lugs or bars

In the references selected above, insert a figure 6 before the voltage code.
Example: **LC1DT20●●** becomes **LC1DT206●●**.

Standard control circuit voltages (for other voltages, please consult your Regional Sales Office)

a.c. supply

Volts	24	42	48	110	115	220	230	240	380	400	415	440	500
LC1D09...D150 and LC1DT20...DT80A (LC1D115 and D150 coils with built-in suppression device as standard)													
50/60 Hz	B7	D7	E7	F7	FE7	M7	P7	U7	Q7	V7	N7	R7	–
LC1D80...D115													
50 Hz	B5	D5	E5	F5	FE5	M5	P5	U5	Q5	V5	N5	R5	S5
60 Hz	B6	–	E6	F6	–	M6	–	U6	Q6	–	–	R6	–

d.c. supply

Volts	12	24	36	48	60	72	110	125	220	250	440
LC1D09…D25 and LC1DT20...DT40 (coils with integral suppression device fitted as standard, by bi-directional peak limiting diode)											
U 0.75…1.25 Uc	JD	BD	CD	ED	ND	SD	FD	GD	MD	UD	RD
LC1DT60A …DT80A (coils with integral suppression device fitted as standard, by bi-directional peak limiting diode)											
U 0.75…1.25 Uc	JD	(4)	(4)	(4)	(4)	(4)	(4)	(4)	(4)	(4)	RD
LP1D40...D80											
U 0.85…1.1 Uc	JD	BD	CD	ED	ND	SD	FD	GD	MD	UD	RD
U 0.75…1.2 Uc	JW	BW	CW	EW	–	SW	FW	–	MW	–	–
LC1D115 (coil with built-in suppression device as standard)											
U 0.75…1.2 Uc	–	BD	–	ED	ND	SD	FD	GD	MD	UD	RD

Low consumption

Volts ⎓	5	12	20	24	48	110	220	250
LC1D09...D25 and LC1DT20...DT40 (coils with integral suppression device fitted as standard, by bi-directional peak limiting diode)								
U 0.8…1.25 Uc	AL	JL	ZL	BL	EL	FL	ML	UL

For other voltages between 5 and 690 V, see pages B8/45 to B8/48.

(1) Please check the availability of your variant in the index page B8/55. The SEARCH function of your viewer can be used.

*(2) **LC1D09** to **D38** and **LC1DT20** to **DT80A**: clip-on mounting on 35 mm ⊔ rail **NSYSDR** or screw fixing.*
*__LC1D80__ ∿: clip-on mounting on 35 mm ⊔ rail **NSYSDR** or 75 mm ⊔ rail **AM1DL** or screw fixing.*
*__LC1__ or __LP1D80__ ⎓: clip-on mounting on 75 mm ⊔ rail **AM1DL** or screw fixing.*
*__LC1D115__ and __D150__: clip-on mounting on 2 x 35 mm ⊔ rails **NSYSDR** or screw fixing.*

*(3) The weights indicated are for contactors with a.c. control circuit. For d.c. or low consumption control circuit, add 0.160 kg from **LC1D09** to **D38**, 0.075 kg from **LC1DT60A** and **D80A** and 1 kg for **LC1D80**.*

*(4) For these coil voltages, choose from Deca green contactors. Same product ref. radical, just add BBE coil voltage code for 24 V DC, BNE for 24-60 V AC/DC, EHE for 48-130 V AC/DC, KUE for 100-250 V AC/DC. Exemple: **LC1DT60ABBE**.*

Characteristics: pages B8/80 to B8/87
Dimensions: pages B8/94 to B8/97
Schemes: pages B8/101 to B8/102
Click **HERE** for access to online contactor selector

PB121716.tif



LC1DT253●●

PB121715.tif



LC1DT80A3●●

4-pole contactors - Load control, 20 to 80 A in category AC-1

Non inductive loads maximum current ($\theta \leq 60$ °C) utilisation category AC-1	Number of poles		Instantaneous auxiliary contacts		Basic reference, to be completed by adding the voltage code (1) / Fixing (2)	Weight (3)
A						kg
Connection by spring terminals						
20	4	–	1	1	**LC1DT203●●**	0.380
	2	2	1	1	**LC1D0983●●**	0.380
25	4	–	1	1	**LC1DT253●●**	0.380
	2	2	1	1	**LC1D1283●●**	0.380
32	4	–	1	1	**LC1DT323●●**	0.425
	2	2	1	1	**LC1D1883●●**	0.425
40	4	–	1	1	**LC1DT403●●**	0.425
	2	2	1	1	**LC1D2583●●**	0.425
Connection by EverLink®, BTR screw connectors and control circuit by spring terminals						
60	4	–	1	1	**LC1DT60A3●●**	1.090
80	4	–	1	1	**LC1DT80A3●●**	1.150

Separate components

Auxiliary contact blocks and add-on modules: see pages B8/36 to B8/42.

Standard control circuit voltages
(for other voltages, please consult your Regional Sales Office)

a.c. supply

Volts	24	42	48	110	115	220	230	240	380	400	415	440	500
LC1D09...D25 and LC1DT20...DT80A (coils with integral suppression device fitted as standard, by bi-directional peak limiting diode)													
50/60 Hz	B7	D7	E7	F7	FE7	M7	P7	U7	Q7	V7	N7	R7	–

d.c. supply

Volts	12	24	36	48	60	72	110	125	220	250	440
LC1D09…D25 and LC1DT20... DT40 (coils with integral suppression device fitted as standard, by bi-directional peak limiting diode)											
U 0.7…1.25 Uc	JD	BD	CD	ED	ND	SD	FD	GD	MD	UD	RD
LC1DT60A...80A (coils with integral suppression device fitted as standard, by bi-directional peak limiting diode)											
U 0.75…1.25 Uc	JD	BD	CD	ED	ND	SD	FD	GD	MD	UD	RD

Low consumption

Volts ⎓	5	12	20	24	48	110	220	250
LC1D09...D25 and LC1DT20...DT40 (coils with integral suppression device fitted as standard, by bi-directional peak limiting diode)								
U 0.8…1.25 Uc	AL	JL	ZL	BL	EL	FL	ML	UL

For other voltages between 5 and 690 V, see pages B8/45 to B8/48.

*(1) **Please check the availability of your variant in the index page B8/55. The SEARCH function of your viewer can be used.***

*(2) **LC1D09** to **D38** and **LC1DT20** to **DT80A**: clip-on mounting on 35 mm ⊥ rail **NSYSDR** or screw fixing.*

*(3) The weights indicated are for contactors with a.c. control circuit. For d.c. or low consumption control circuit, add 0.160 kg from **LC1D09** to **D38**, 0.075 kg for **LC1DT60A** and **DT80A**.*

Contactors

Characteristics: pages B8/80 to B8/87
Dimensions: pages B8/94 to B8/97
Schemes: pages B8/101 to B8/102
Click **HERE** for access to online contactor selector

PB121681.eps



LC1D09●●

PB121706.tif



LC1D25●●

PB121707.tif



LC1D80A●●

PB123774.eps



LC1D95●●

Contactors conforming to UL and CSA standards (North American market) - 25 to 160 A

Standard power ratings of motors 50/60 Hz						Associated cable type 75 °C-Cu	UL continuous current	Type of contactor required Basic reference, to be completed by adding the control voltage code (1)
Single-phase 1 Ø		3-phase 3 Ø						Fixing, connection (2)
120 V	240 V	208 V	240 V	480 V	600 V			
HP	HP	HP	HP	HP	HP		A	
Connection by screw clamp terminals								
1/3	1	2	2	5	7.5	AWG 18 - 10	25	**LC1D09●●**
0.5	2	3	3	7.5	10	AWG 18 - 10	25	**LC1D12●●**
1	3	5	5	10	15	AWG 18 - 8	32	**LC1D18●●**
2	3	7.5	7.5	15	20	AWG 14 - 6	40	**LC1D25●●**
2	5	10	10	20	25	AWG 14 - 6	50	**LC1D32●●** (3)
2	5	10	10	20	25	AWG 14 - 6	50	**LC1D38●●** (3)
Power connections by EverLink® BTR screw connectors and control by spring terminals								
3	5	10	10	30	30	AWG 16 - 2	60	**LC1D40A●●**
3	7.5	15	15	40	40	AWG 16 - 2	70	**LC1D50A●●**
5	10	20	20	40	50	AWG 16 - 2	80	**LC1D65A●●**
5	10	20	20	40	50	AWG 16 - 2	80	**LC1D80A●●**
Connection by screw clamp terminals or connectors								
7.5	15	25	30	60	60	AWG 10 - 2	110	**LC1D80●●**
7.5	15	25	30	60	60	AWG 10 - 2	110	**LC1D95●●**
–	–	30	40	75	100	AWG 8-1/0	160	**LC1D115●●**
–	–	40	50	100	125	AWG 8-1/0	160	**LC1D150●●**

Applications with High-Fault Short-Circuit ratings

High-fault short-circuit current ratings are: 100 kA (D09-80, D115-150) at 600 V with Class J fuses and 85 kA (D09-38), 100 kA (D40A-80, D115-150) at 480 V and 50 kA (D09-80, D115-150) at 600 V with circuit breakers.

Application example

For a 15 HP-230 V motor
Select a contactor type **LC1D50A**.
Information: the contactor rating selected corresponds to “size 2”, the associated cable is type AWG3 75 °C-Cu.

Standard control circuit voltages (for other voltages, please consult your Regional Sales Office)

a.c. supply

Volts	24	42	48	110	115	120	208	220	230	240	380	400	415	440	480	500
LC1D09…D150 (D115 and D150 coils with built-in suppression device as standard)																
50/60 Hz	B7	D7	E7	F7	FE7	G7 (4)	LE7 (4)	M7	P7	U7	Q7	V7	N7	R7	T7 (4)	S7
LC1D09…D65 (not available with "connection for lugs or bars")																
50 Hz	B5	D5	E5						P5							
LC1D80…D115																
50 Hz	B5	D5	E5	F5	FE5	G5	–	M5	P5	U5	Q5	V5	N5	R5	–	S5
60 Hz	B6	–	E6	F6	–	G6	L6	M6	–	U6	Q6	–	–	R6	T6	–

d.c. supply

Volts	12	24	36	48	60	72	110	125	220	250	440
LC1D09…D32 (coils with integral suppression device fitted as standard, by bi-directional peak limiting diode)											
U 0.7…1.25 Uc	JD	BD	CD	ED	ND	SD	FD	GD	MD	UD	RD
LC1D40A…D65A (coils with integral suppression device fitted as standard, by bi-directional peak limiting diode)											
U 0.75…1.25 Uc	JD	(5)	(5)	(5)	(5)	(5)	(5)	(5)	(5)	(5)	RD
LC1D80 and D95											
U 0.85…1.1 Uc	JD	BD	CD	ED	ND	SD	FD	GD	MD	UD	RD
U 0.75…1.2 Uc	JW	BW	CW	EW	–	SW	FW	–	MW	–	–
LC1D115 and D150 (coils with built-in suppression device as standard)											
U 0.75…1.2 Uc	–	BD	–	ED	ND	SD	FD	GD	MD	UD	RD

Low consumption

Volts ⎓	5	12	20	24	48	72	110	220	250
LC1D09…D38 (coils with integral suppression device fitted as standard, by bi-directional peak limiting diode)									
U 0.8…1.25 Uc	AL	JL	ZL	BL	EL	SL	FL	ML	UL

(1) Please check the availability of your variant in the index page B8/55. The SEARCH function of your viewer can be used.
*(2) **LC1D09** to **D65A**: clip-on mounting on 35 mm ⊥ rail **NSYSDR** or screw fixing.*
__LC1D80__ and __LC1D95__: clip-on mounting on 35 mm ⊥ rail __NSYSDR__ or 75 mm ⊥ rail __AM1DL__ or screw fixing.
__LC1D115__ and __D150__: clip-on mounting on 2 x 35 mm ⊥ rails __NSYSDR__ or screw fixing.
(3) Versions with spring terminals __LC1D323__ and __LC1D383__ are not certified UL/CSA.
(4) Contactors __LC1D40A__, __50A__, __65A__, __80A__: for this coil voltage use is only on 60 Hz.
(5) For these coil voltages, choose from Deca green contactors. Same product ref. radical, just add BBE coil voltage code for 24 V DC, BNE for 24-60 V AC/DC, EHE for 48-130 V AC/DC, KUE for 100-250 V AC/DC. Exemple: __LC1D40ABBE__.

Characteristics: pages B8/80 to B8/87
Dimensions: pages B8/94 to B8/97
Schemes: pages B8/101 to B8/102
Click **HERE** for access to online contactor selector

PB121717.tif



LC2D12●●

3-pole reversing contactors - Motors up to 75 kW / 400 V in category AC-3

Horizontally mounted - Pre-wired power connections.

Standard power ratings of 3-phase motors 50-60 Hz in category AC-3 (θ ≤ 60 °C)							Rated operational current in AC-3 440 V up to	Instantaneous auxiliary contacts per contactor		Contactors supplied with coil Basic reference, to be completed by adding the control voltage code [1]	Weight [3]
220 V 230 V	380 V 400 V	415 V	440 V	500 V	660 V 690 V	1000 V				Fixing [2]	
kW	kW	kW	kW	kW	kW	kW	A				kg
With mechanical interlock, without electrical interlocking, for connection by screw clamp terminals or connectors											
2.2	4	4	4	5.5	5.5	–	9	1	1	**LC2D09●●** [4]	0.687
3	5.5	5.5	5.5	7.5	7.5	–	12	1	1	**LC2D12●●** [4]	0.697
4	7.5	9	9	10	10	–	18	1	1	**LC2D18●●** [4]	0.707
5.5	11	11	11	15	15	–	25	1	1	**LC2D25●●** [4]	0.787
7.5	15	15	15	18.5	18.5	–	32	1	1	**LC2D32●●** [4]	0.797
9	18.5	18.5	18.5	18.5	18.5	–	38	1	1	**LC2D38●●** [4]	0.807
11	18.5	22	22	22	30	–	40	1	1	**LC2D40A●●**	1.870
15	22	25	30	30	33	–	50	1	1	**LC2D50A●●**	1.880
18.5	30	37	37	37	37	–	65	1	1	**LC2D65A●●**	1.890
22	37	45	45	55	45	–	80	1	1	**LC2D80●●**	3.200
25	45	45	45	55	45	–	95	1	1	**LC2D95●●**	3.200
With mechanical interlock and electrical interlocking, for connection by screw clamp terminals or connectors											
30	55	59	59	75	80	65	115	1	1	**LC2D115●●**	6.350
40	75	80	80	90	100	75	150	1	1	**LC2D150●●**	6.400

PB121685.eps



LC2D65A●●

PB123819.tif



LC2D1156●●

Connection by lugs or bars

For reversing contactors LC2D09 to LC2D38, LC2D115 and LC2D150, in the references selected above, insert a figure **6** before the voltage code. Example: **LC2D09●●** becomes **LC2D096●●**.
To build a 40 to 65 A reversing contactor, for connection by lugs, order 2 contactors **LC1D●●A6** and mechanical interlock **LAD4CM** (see page B8/43).

Component parts

Auxiliary contact blocks and add-on modules: see pages B8/36 to B8/42.

Standard control circuit voltages (for other voltages, please consult your Regional Sales Office)

a.c. supply													
Volts	**24**	**42**	**48**	**110**	**115**	**220**	**230**	**240**	**380**	**400**	**415**	**440**	**500**
LC2D09…D150 (D115 and D150 coils with built-in suppression device as standard)													
50/60 Hz	B7	D7	E7	F7	FE7	M7	P7	U7	Q7	V7	N7	R7	S7
LC2D80…D115													
50 Hz	B5	D5	E5	F5	FE5	M5	P5	U5	Q5	V5	N5	R5	S5
60 Hz	B6	–	E6	F6	–	M6	–	U6	Q6	–	–	R6	–

d.c.supply											
Volts	**12**	**24**	**36**	**48**	**60**	**72**	**110**	**125**	**220**	**250**	**440**
LC2D09…D38 (coils with integral suppression device fitted as standard, by bi-directional peak limiting diode)											
U 0.7…1.25 Uc	JD	BD	CD	ED	ND	SD	FD	GD	MD	UD	RD
LC2D40A…D65A (coils with integral suppression device fitted as standard, by bi-directional peak limiting diode)											
U 0.75…1.25 Uc	JD	BD	CD	ED	ND	SD	FD	GD	MD	UD	RD

Low consumption								
Volts ⎓	**5**	**12**	**20**	**24**	**48**	**110**	**220**	**250**
LC2D09...D38 (coils with integral suppression device fitted as standard, by bi-directional peak limiting diode)								
U 0.8…1.25 Uc	AL	JL	ZL	BL	EL	FL	ML	UL

For other voltages between 5 and 690 V, see pages B8/45 to B8/48.

*(1) **Please check the availability of your variant in the index page B8/55. The SEARCH function of your viewer can be used.***

*(2) LC2D09 to D65A: clip-on mounting on 35 mm ⊔ rail **NSYSDR** or screw fixing.*
*LC2D80 and D95: clip-on mounting on 35 mm ⊔ rail **NSYSDR** or 75 mm ⊔ rail **AM1DL** or screw fixing.*
*LC2D115 and D150: clip-on mounting on 35 mm ⊔ rail **NSYSDR** or screw fixing.*

*(3) The weights indicated are for contactors with a.c. control circuit. For d.c. or low consumption control circuit, add 0.330 kg for **LC2D09** to **D38**, 0.150 kg for **LC1D40A** to **D65A**.*

*(4) For reversing contactors with electrical interlocking pre-wired at the factory, add suffix **V** to the references selected above. Example: **LC2D09B7** becomes **LC2D09B7V**.*

***Note:** when assembling a reversing contactor, it is good practice to incorporate a 50 ms time delay.*

Characteristics: pages B8/80 to B8/87
Dimensions: pages B8/103 and B8/104
Schemes: pages B8/105 and B8/106
Click **HERE** for access to online contactor selector

PB121718.tif



LC2D123●●

3-pole reversing contactors - Motors up to 15 kW / 400 V in category AC-3

Pre-wired power connections.
Mechanical interlock without electrical interlocking.

Standard power ratings of 3-phase motors 50-60 Hz in category AC-3 (θ ≤ 60 °C)						Rated operational current in AC-3 440 V up to	Instantaneous auxiliary contacts per contactor		Contactors supplied with coil Basic reference, to be completed by adding the voltage code [1]	Weight [3]
220 V 230 V	380 V 400 V	415 V	440 V	500 V	660 V 690 V				Fixing [2]	
kW	kW	kW	kW	kW	kW	A				kg
For connection by spring terminals										
2.2	4	4	4	5.5	5.5	9	1	1	**LC2D093●●**	0.687
3	5.5	5.5	5.5	7.5	7.5	12	1	1	**LC2D123●●**	0.697
4	7.5	9	9	10	10	18	1	1	**LC2D183●●**	0.707
5.5	11	11	11	15	15	25	1	1	**LC2D253●●**	0.787
7.5	15	15	15	18.5	18.5	32 [4]	1	1	**LC2D323●●**	0.797
Power connection by EverLink®, BTR screw connectors [5] and control by spring terminals										
11	18.5	22	22	22	30	40	1	1	**LC2D40A3●●**	1.870
15	22	25	30	30	33	50	1	1	**LC2D50A3●●**	1.880
18.5	30	37	37	37	37	65	1	1	**LC2D65A3●●**	1.890
For connection by Faston connectors										

All power connections are to be made by the customer.
These contactors are fitted with Faston connectors: 2 x 6.35 mm on the power poles and 1 x 6.35 mm on the coil terminals.
For reversing contactors LC2D09 and LC2D12 only, in the references selected above, replace the figure **3** before the voltage code with a figure **9**.
Example: **LC2D093●●** becomes **LC2D099●●**.

Component parts

Auxiliary contact blocks and add-on modules: see pages B8/36 to B8/42.

Standard control circuit voltages (for other voltages, please consult your Regional Sales Office)

a.c. supply													
Volts	**24**	**42**	**48**	**110**	**115**	**220**	**230**	**240**	**380**	**400**	**415**	**440**	**500**
LC2D09…D65A													
50/60 Hz	B7	D7	E7	F7	FE7	M7	P7	U7	Q7	V7	N7	R7	S7

d.c. supply											
Volts	**12**	**24**	**36**	**48**	**60**	**72**	**110**	**125**	**220**	**250**	**440**
LC2D09…D32 (coils with integral suppression device fitted as standard, by bi-directional peak limiting diode)											
U 0.7…1.25 Uc	JD	BD	CD	ED	ND	SD	FD	GD	MD	UD	RD
LC2D40A …D65A (coils with integral suppression device fitted as standard, by bi-directional peak limiting diode)											
U 0.75…1.25 Uc	JD	BD	CD	ED	ND	SD	FD	GD	MD	UD	RD

Low consumption								
Volts ⎓	**5**	**12**	**20**	**24**	**48**	**110**	**220**	**250**
LC2D09...D32 (coils with integral suppression device fitted as standard, by bi-directional peak limiting diode)								
U 0.8…1.25 Uc	AL	JL	ZL	BL	EL	FL	ML	UL

For other voltages between 5 and 690 V, see pages B8/45 to B8/48.

*(1) **Please check the availability of your variant in the index page B8/55. The SEARCH function of your viewer can be used.***

*(2) LC2D09 to D32: clip-on mounting on 35 mm ⊔ rail **NSYSDR** or screw fixing.*

*(3) The weights indicated are for reversing contactors with a.c. control circuit. For d.c. or low consumption control circuit, add 0.330 kg for **LC2D09** to **D38**, 0.150 kg for **LC1D40A** to **D65A**.*

*(4) Must be wired with 2 x 4 mm² cables in parallel on the upstream side. On the downstream side, outgoing terminal block **LAD331** may be used (Quickfit technology, see page B1/18).When wired with a single cable, the product is limited to 25 A (11 kW/400 V motors).*

*(5) BTR screws: hexagon socket head. In accordance with local electrical wiring regulations, a size 4 insulated Allen key must be used (reference **LADALLEN4**, see page B8/42).*

Contactors

Characteristics: pages B8/80 to B8/87
Dimensions: pages B8/103 and B8/104
Schemes: pages B8/105 and B8/106
Click HERE for access to online contactor selector

PB121719.eps



LC2DT20●●

PB123820.eps



LC2D115004●●

4-pole changeover contactor pairs - 20 to 200 A in category AC-1

Pre-assembled. Pre-wired power connections

LC2DT20 to LC2DT40: mechanical interlock without electrical interlocking.
LC2D80004: order separately 2 auxiliary contact blocks LADN●1 to obtain electrical interlocking between the 2 contactors (see page B8/36).
For electrical interlocking incorporated in the mechanical interlock, please consult your Regional Sales Office.
LC2D115004: mechanical interlock with integral, pre-wired electrical interlocking.

For connection by screw clamp terminals or connectors

Utilisation category AC-1 Non-inductive loads Maximum rated operational current ($\theta \leq 60$ °C)	Instantaneous auxiliary contacts per contactor		Contactors supplied with coil Basic reference, to be completed by adding the voltage code (1) (2) Fixing (3)	Weight
A				kg
20	1	1	**LC2DT20●●**	0.730
25	1	1	**LC2DT25●●**	0.730
32	1	1	**LC2DT32●●**	0.850
40	1	1	**LC2DT40●●**	0.850
125	–	–	**LC2D80004●●**	3.200
200	–	–	**LC2D115004●●**	7.400

For connection by lugs or bars

20	1	1	**LC2DT206●●**	0.730
25	1	1	**LC2DT256●●**	0.730
32	1	1	**LC2DT326●●**	0.850
40	1	1	**LC2DT406●●**	0.850

For customer assembly

For connection by screw clamp terminals or connectors

60	1	1	**LC1DT60A●●** (4)	–
80	1	1	**LC1DT80A●●** (4)	–

For connection by lugs or bars

60	1	1	**LC1DT60A6●●** (4)	–
80	1	1	**LC1DT80A6●●** (4)	–

Auxiliary contact blocks and add-on modules: see pages B8/36 to B8/42.

Note: when assembling changeover contactor pairs, it is good practice to incorporate a 50 ms time delay.
(1) See note (2) on next page.
(2) Please check the availability of your variant in the index page B8/55. The SEARCH function of your viewer can be used.
*(3) **LC2DT20** to **LC2DT80**: clip-on mounting on 35 mm ⊥ rail **NSYSDR** or screw fixing.*
***LC2D80:** clip-on mounting on 35 mm ⊥ rail **NSYSDR** or 75 mm ⊥ rail **AM1DL** or screw fixing.*
***LC2D115**: clip-on mounting on 2 x 35 mm ⊥ rails **NSYSDR** or screw fixing.*
*(4) For these operational currents, order 2 identical contactors and a mechanical interlock **LAD4CM** (see page B8/43).*

Contactors

Characteristics: pages B8/80 to B8/87
Dimensions: pages B8/103 and B8/104
Schemes: pages B8/105 and B8/106
Click HERE for access to online contactor selector



Example of necessary components for customer assembly:
2 x LC1DT80A3●● contactors + LAD4CM mechanical interlock

4-pole changeover contactor pairs for 20 to 80 A control in category AC-1

Pre-assembled, for customer assembly

Pre-wired power connections, for connection by spring terminals.

Utilisation category AC-1 Non-inductive loads Maximum rated operational current (θ ≤ 60 °C)	Instantaneous auxiliary contacts per contactor		Contactors supplied with coil Basic reference, to be completed by adding the control voltage code (1) Fixing (2)
A			
20	1	1	**LC2DT203●●**
Power connection by EverLink®, BTR screw connectors (3) and control by spring terminals			
60	1	1	**LC1DT60A3●●** (4)
80	1	1	**LC1DT80A3●●** (4)

Separate components

Auxiliary contact blocks and add-on modules: see pages B8/19 to B8/19.

Standard control circuit voltages
(for other voltages, please consult your Regional Sales Office)

a.c. supply

Volts	24	42	48	110	115	220	230	240	380	400	415	440	500
LC2DT20…DT40, LC2DT60A…DT80A													
50/60 Hz	B7	D7	E7	F7	FE7	M7	P7	U7	Q7	V7	N7	R7	–
LC2D80004…D115004													
50 Hz	B5	D5	E5	F5	FE5	M5	P5	U5	Q5	V5	N5	R5	S5
60 Hz	B6	–	E6	F6	–	M6	–	U6	Q6	–	–	R6	–

d.c. supply

Volts	12	24	36	48	60	72	110	125	220	250	440
LC2DT20…DT40, LC1DT60…DT80 (coils with integral suppression device fitted as standard, by bi-directional peak limiting diode)											
U 0.7…1.25 Uc	JD	BD	CD	ED	ND	SD	FD	GD	MD	UD	RD

Low consumption

Volts ⎓	5	12	20	24	48	110	220	250
LC2DT20...DT40 (coils with integral suppression device fitted as standard, by bi-directional peak limiting diode)								
U 0.8…1.25 Uc	AL	JL	ZL	BL	EL	FL	ML	UL

For other voltages between 5 and 690 V, see pages B8/19 to B8/19.

*(1) **Please check the availability of your variant in the index page B8/55. The SEARCH function of your viewer can be used.***

*(2) Clip-on mounting on 35 mm ⊥ rail **NSYSDR** or screw fixing.*

*(3) BTR screws: hexagon socket head. In accordance with local electrical wiring regulations, a size 4 insulated Allen key must be used (reference **LADALLEN4**, see page B8/19).*

*(4) For these operational currents, order 2 identical contactors and a mechanical interlock **LAD4CM** (see page B8/19).*

Contactors

Characteristics: pages B8/80 to B8/87
Dimensions: pages B8/103 and B8/104
Schemes: pages B8/105 and B8/106
Click **HERE** for access to online contactor selector

PB121720.tif



LC2D09●●●

PB121721.tif



LC2D40A●●●

Deca green contactors have a dark grey casing and a 3-character code voltage.

3-pole reversing contactors - Motors up to 37 kW / 400 V in category AC-3

Pre-wired power connections

Standard power ratings of 3-phase motors 50-60 Hz in category AC-3 (θ ≤ 60 °C)						Rated operational current in AC-3 440 V up to	Instantaneous auxiliary contacts per contactor		Contactors supplied with coil Partial reference, to be completed by adding the control voltage code [1]	Weight
220 V 230 V	380 V 400 V	415 V	440 V	500 V	660 V 690 V				Fixing [2]	
kW	kW	kW	kW	kW	kW	A				kg
With mechanical interlock, without electrical interlocking, for connection by screw clamp terminals or Everlink BTR screw connectors [3] [4]										
2.2	4	4	4	5.5	5.5	9	1	1	**LC2D09●●●**	0.783
3	5.5	5.5	5.5	7.5	7.5	12	1	1	**LC2D12●●●**	0.793
4	7.5	9	9	10	10	18	1	1	**LC2D18●●●**	0.803
5.5	11	11	11	15	15	25	1	1	**LC2D25●●●**	0.913
7.5	15	15	15	18.5	18.5	32	1	1	**LC2D32●●●**	0.923
9	18.5	18.5	18.5	18.5	18.5	38	1	1	**LC2D38●●●**	0.933
11	18.5	22	22	22	30	40	1	1	**LC2D40A●●●** [3]	2.154
15	22	25	30	30	33	50	1	1	**LC2D50A●●●** [3]	2.164
18.5	30	37	37	37	37	65	1	1	**LC2D65A●●●** [3]	2.174
22	37	37	37	37	37	66	1	1	**LC2D80A●●●** [3]	2.174

Auxiliary contact blocks and add-on modules

See pages B8/36 to B8/42.

Coil voltage codes

AC/DC 24 V DC supply

Volts	24 (DC only)	24-60	48-130	100-250
LC2D09...D32, LC2D40A ... D80A				
U 0.85...1.1 Uc		BNE	EHE	KUE
LC2D09...D38				
U 0.8...1.2 Uc	BNE			
LC2D40A ...D80A				
U 0.8...1.2 Uc	BBE			

(1) Please check the availability of your variant in the index page B8/55. The SEARCH function of your viewer can be used.
*(2) **LC2D09** to **D80A**: clip-on mounting on 35 mm ⊔ rail **NSYSDR** or screw fixing.*
*(3) BTR screws: hexagon socket head. In accordance with local electrical wiring regulations, a size 4 insulated Allen key must be used (reference **LADALLEN4**, see page B8/42).*
(4) Electrical interlocking is recommended when 2 orders (direct and reverse) could appeared in the same time.

PB121722.eps



LC1DGK●●, LC1DLK●●, LC1DMK●●

PB123777.eps



LC1DWK12●●

Contactors for switching 3-phase capacitor banks (power factor correction)

Special contactors **LC1D●K** are designed for switching 3-phase, single or multiple-step capacitor banks (up to 6 steps). Over 6 steps, it is recommanded to use chokes in order to limit the inrush current and thus improve the lifetime of the installation. The contactors are conform to standards IEC 60070 and 60831, UL and CSA.

Contactor applications

Specification

Contactors fitted with a block of early make poles and damping resistors, limiting the value of the current on closing to 60 In max.
This current limitation increases the life of all the components of the installation, in particular that of the fuses and capacitors.

Operating conditions

Short-circuit protection must be provided by gI type fuses rated at 1.7…2 In.
It will ensure the service continuity of the whole installation in case of a capacitor contactor end of life

Maximum operational power

The power values given in the selection table below are for the following operating conditions:

Prospective peak current at switch-on	LC1D●K		200 In
Maximum operating rate	LC1DFK, DGK, DLK, DMK		240 operating cycles/hour
	LC1DPK, DTK, DWK		240 operating cycles/hour
Electrical durability at nominal load	All contactor ratings	400 V	300 000 operating cycles
		690 V	200 000 operating cycles

Operational power at 50/60 Hz (1) θ ≤ 60 °C (2)				Instantaneous auxiliary contacts		Tightening torque on cable end	Basic reference, to be completed by adding the voltage code (3) (4)	Weight
230 V	400 V 415 V	440 V	690 V					
kVAR	kVAR	kVAR	kVAR	N/O	N/C	N.m		kg
7	12.5	12.5	21	1	2	1.7	**LC1DFK●●**	0.430
9.5	16.7	16.7	28.5	1	2	2.5	**LC1DGK●●**	0.450
11	20	21	33	1	2	2.5	**LC1DLK●●**	0.600
14	25	27	42	1	2	2.5	**LC1DMK●●**	0.630
17	30	32	50	1	2	5	**LC1DPK●●**	1.300
22	40	43	67	1	2	5	**LC1DTK●●**	1.300
35	63	67	104	1	2	9	**LC1DWK12●●**	1.650

Switching of multiple-step capacitor banks (with equal or different power ratings)

The correct contactor for each step is selected from the above table, according to the power rating of the step to be switched.
Example: 50 kVAR 3-step capacitor bank. Temperature: 50 °C and U = 400 V or 440 V.
One 25 kVAR step: contactor LC1DMK, one 15 kVAR step: contactor LC1DGK,
and one 10 kVAR step: contactor LC1DFK.

(1) Operational power of the contactor according to the scheme on the page opposite.
(2) The average temperature over a 24-hour period, in accordance with standards IEC 60070 and 60831 is 45 °C.
(3) Standard control circuit voltages (the delivery time is variable, please consult your Regional Sales Office):

Volts	24	48	110	120	220	230	240	380	400	415	440
50/60 Hz	B7	E7	F7	G7	M7	P7	U7	Q7	V7	N7	R7

(4) Please check the availability of your variant in the index page B8/55. The SEARCH function of your viewer can be used.

Dimensions, schemes:
page B8/107

Click **HERE** for access to online contactor selector

See page opposite for mounting possibilities according to the contactor type

(1) No left side mounting on Deca green contactors.

Product references

PB121689.eps



LADN22

PB123773.eps



LAD8N11

PB123821.eps



LA1DX●●, LA1DZ●●

Instantaneous auxiliary contact blocks for connection by screw clamp terminals

For use in normal operating environments

Clip-on mounting	Number of contacts per block	Composition					Reference	
Front	1	–	–	–	1	–	**LADN10**	
		–	–	–	–	1	**LADN01**	
	2	–	–	–	1	1	**LADN11**	
		–	–	–	2	–	**LADN20**	
		–	–	–	–	2	**LADN02**	
	4	–	–	–	2	2	**LADN22**	**LADN22S** (1)
		–	–	–	1	3	**LADN13**	
		–	–	–	4	–	**LADN40**	
		–	–	–	–	4	**LADN04**	
		–	–	–	3	1	**LADN31**	
	4 incl. 1 N/O & 1 N/C make before break	–	–	–	2	2	**LADC22**	
Side (contact blocks compatible with AC coil contactors only)	2	–	–	–	1	1	**LAD8N11**	
		–	–	–	2	–	**LAD8N20**	
		–	–	–	–	2	**LAD8N02**	
For terminal referencing conforming to EN 50012								
Front on 3P contactors and 4P contactors 20 to 80 A	2	–	–	–	1	1	**LADN11G**	
	4	–	–	–	2	2	**LADN22G**	
Front on 4P contactors 125 to 200 A	2	–	–	–	1	1	**LADN11P**	
	4	–	–	–	2	2	**LADN22P**	
With dust and damp protected contacts, for use in particularly harsh industrial environments								
Front	2	–	2	–	–	–	**LA1DX20**	
		1	1	–	–	–	**LA1DX11**	
		2	–	–	–	–	**LA1DX02**	
		–	2	2	–	–	**LA1DY20** (2)	
	4	–	2	–	2	–	**LA1DZ40**	
		–	2	–	1	1	**LA1DZ31**	

Instantaneous auxiliary contact blocks for connection by lugs

This type of connection is not possible for blocks with 1 contact or blocks with dust and damp protected contacts. For all other instantaneous auxiliary contact blocks, add the figure **6** to the end of the references selected above. Example: **LADN11** becomes **LADN116**.

Instantaneous auxiliary contact blocks for connection by spring terminals

This type of connection is not possible for LAD8, LADN with 1 contact or blocks with dust and damp protected contacts. For all other contact blocks, add the figure **3** to the end of the references selected above.
Example: **LADN11** becomes **LADN113**.

Maximum number of auxiliary contacts that can be fitted:

Contactors			Instantaneous auxiliary contacts					Time delay Front mounted
Type	Number of poles and size		Side mounted		Front mounted			
					1 contact	2 contacts	4 contacts	
AC	3P	LC1D09…D38	1 on LH or 1 on RH side(3)	and	–	1	or 1	or 1
AC/DC		LC1D40A…D80A	1 on LH or 1 on RH side	and	–	1	or 1	or 1
		LC1D80 and D95 (50/60 Hz)	1 on each side	or	2	and 1	or 1	or 1
		LC1D80 and D95 (50 or 60 Hz)	1 on each side	and	2	and 1	or 1	or 1
		LC1D115 and D150	1 on LH side	and	–	1	or 1	or 1
	4P	LC1DT20…DT40	1 on LH side	and	–	1	or 1	or 1
		LC1DT60A and DT80A	1 on LH or 1 on RH side	and	–	1	or 1	or 1
		LC1D40008, D65008 and D80	1 on each side	or	1	or 1	or 1	or 1
		LC1D115	1 on each side	and	1	or 1	or 1	or 1
DC	3P	LC1D09…D38	–		–	1	or 1	or 1
		LC1D40A…D80A	–		–	1	or 1	or 1
		LC1D80 and D95	–		1	or 1	or 1	or 1
		LC1D115 and D150	1 on LH side	and	–	1	or 1	or 1
	4P	LC1DT20…DT40	–		–	1	or 1	or 1
		LC1DT60A and DT80A	–		–	1	or 1	or 1
		LC1D40008, D65008 and D80	–		2	and 1	or 1	or 1
		LC1D115	1 on each side		–	and 1	or 1	or 1
LC (4) (5)	3P	LC1D09…D38	–		–	1	–	–
	4P	LC1DT20…DT40	–		–	1	–	–

(1) With red front face - for safety chain indication.
(2) Device fitted with 4 earth screen continuity terminals.
(3) 1 on LH side for AC coils - 1 on RH side for AC/DC coils.
(4) LC: low consumption.
(5) LA1D●●● dust & damp proof auxiliary contact blocks not allowed.

Contactors

Characteristics:
pages B8/88 and B8/89

Curves:
page B8/90

Dimensions:
pages B8/94 and B8/95

Life Is On Schneider Electric

Product references



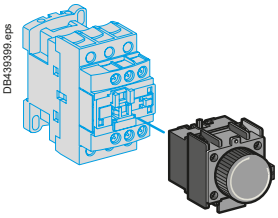

LADT●

Time delay auxiliary contact blocks for connection by screw clamp terminals

Maximum number of auxiliary contact blocks that can be fitted per contactor, see page B8/36.
Sealing cover to be ordered separately, see page B8/42.
LADS2: with switching time of 40 ms ± 15 ms between opening of the N/C contact and closing of the N/O contact.

Clip-on mounting	Number of contacts	Time delay		Reference
		Type	Setting range	
Front	1 N/O + 1 N/C	On-delay	0.3…3 s	**LADT0**
			1…30 s	**LADT2**
			10…180 s	**LADT4**
			1…30 s	**LADS2**
		Off-delay	0.3…3 s	**LADR0**
			1…30 s	**LADR2**
			10…180 s	**LADR4**



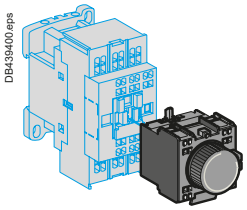

LADT●3

Time delay auxiliary contact blocks for connection by lugs

Add the figure **6** to the end of the references selected above. Example: **LADT0** becomes **LADT06**.

Time delay auxiliary contact blocks for connection by spring terminals

Add the figure **3** to the end of the references selected above. Example: **LADT0** becomes **LADT03.**

Time delay auxiliary contact blocks for connection by Faston connectors

Add the figure **9** to the end of the references selected above. Example: **LADT0** becomes **LADT09**.

Mechanical latch blocks (1)

Clip-on mounting	Unlatching control	For use on contactor	Basic reference, to be completed by adding the control voltage code (2) (3)
Front	Manual or electric	LC1D09…D38 (∿ or ⎓) (4) LC1DT20…DT40 (∿ or ⎓)	**LAD6K10●**
		LC1D40A…D80A (3 P ∿ or ⎓) LC1DT60A and DT80A (4 P ∿ or ⎓)	**LAD6K10●**
		LC1D80…D150 (3 P ∿) LC1D80 and D150 (3 P ⎓) LC1D80 (4 P ∿) LC1D80 and D115 (4 P ∿) LP1D80 and LC1D115 (4 P ⎓)	**LA6DK20●**
		LC1D40 and D65 (4 P ∿) LP1D40 and D65 (4 P ⎓)	**LA6DK10●**



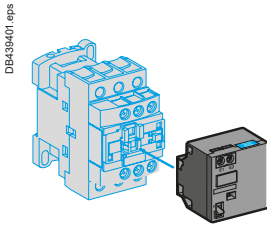

LAD6K10●

(1) The mechanical latch block must not be powered up at the same time as the contactor.
The duration of the control signal for the mechanical latch block and the contactor should be:
⩾ 100 ms for a contactor operating on an a.c. supply,
⩾ 250 ms for a contactor operating on a d.c. supply.
*Maximum impulse duration for the **LAD6K10●** mechanical latch block: 10 seconds.*
(2) Standard control circuit voltages (for other voltages, please consult your Regional Sales Office):

Volts 50/60 Hz, ⎓	24	32/36	42/48	60/72	100	110/127	220/240	256/277	380/415
Code	B	C	E	EN	K	F	M	U	Q

(3) Please check the availability of your variant in the index page B8/55. The SEARCH function of your viewer can be used.
*(4) The DC, low consumption contactors (coil code ●L) are not compatible with the mechanical latch blocks **LAD6K10●**.*

Characteristics:
pages B8/88 to B8/90

Dimensions:
pages B8/94 to B8/97

Schemes:
pages B8/101 to B8/102

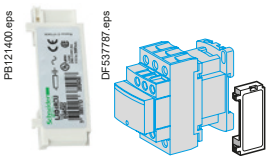

LAD4RCU LAD4●●

RC circuits (Resistor-Capacitor)

Effective protection for circuits highly sensitive to "high frequency" interference. For use only in cases where the voltage is virtually sinusoidal. i.e. less than 5 % total harmonic distortion. Voltage limited to 3 Uc max. and oscillating frequency limited to 400 Hz max. Slight increase in drop-out time (1.2 to 2 times the normal time).

Mounting	For use with contactor (1)			Reference
	Rating	Type		
		V ∿	V ⎓	
Clip-on side mounting (2) (3)	D09…D38 (3P) DT20…DT40	24…48	–	**LAD4RCE**
		50…127	–	**LAD4RCG**
		110…250	–	**LAD4RCU**
Clip-on front mounting (2) (3)	D40A…D65A (3P) DT60A…DT80A (4P)	24…48	–	**LAD4RC3E**
		50…127	–	**LAD4RC3G**
		110…240	–	**LAD4RC3U**
		380…415	–	**LAD4RC3N**
Screw fixing (4)	D80…D150 (3P) D40…D115 (4P)	24…48	–	**LA4DA2E**
		50…127	–	**LA4DA2G**
		110…240	–	**LA4DA2U**
		380…415	–	**LA4DA2N**

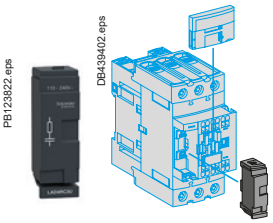

LAD4RC3●, LAD4V3●, LAD4D3U, LAD4T3●

Varistors (peak limiting)

Protection provided by limiting the transient voltage to 2 Uc max. Maximum reduction of transient voltage peaks. Slight increase in drop-out time (1.1 to 1.5 times the normal time).

Clip-on side mounting (2) (3)	D09…D38 (3P) DT20…DT40	24…48	–	**LAD4VE**
		50…127	–	**LAD4VG**
		110…250	–	**LAD4VU**
Clip-on front mounting (2) (3)	D40A…D65A (3P) DT60A…DT80A (4P)	24…48	24…48	**LAD4V3E**
		50…127	50…127	**LAD4V3G**
		110…250	110…250	**LAD4V3U**
Screw fixing (4)	D80…D115 (3P) D80…D115 (4P)	24…48	–	**LA4DE2E**
		50…127	–	**LA4DE2G**
		110…250	–	**LA4DE2U**
	D80…D95 (3P) D80 (4P)	–	24…48	**LA4DE3E**
		–	110…250	**LA4DE3U**

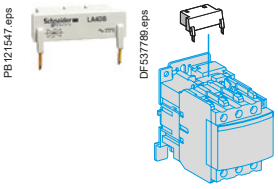

LA4DC3U

Flywheel diodes

No overvoltage or oscillating frequency. Increase in drop-out time (6 to 10 times the normal time). Polarised component.

Clip-on side mounting (3) (5)	D09…D38 (3P), DT20…DT40	–	5...600	**LAD4DDL**
Clip-on front mounting (3)	D40A…D65A (3P), DT60A…DT80A (4P)	–	24…250	**LAD4D3U**
Screw fixing (4)	D80 and D95 (3P), D40…D80 (4P)	–	24…250	**LA4DC3U**

Bidirectional peak limiting diodes

Protection provided by limiting the transient voltage to 2 Uc max.
Maximum reduction of transient voltage peaks.

Clip-on side mounting (2)	D09…D38 (3P) DT20…DT40 (4P) (6)	24	–	**LAD4TB**
		–	24	**LAD4TBDL**
		72	–	**LAD4TS**
		–	72	**LAD4TSDL**
		–	125	**LAD4TGDL**
		–	250	**LAD4TUDL**
Clip-on front mounting (2)	D40A…D65A (3P) DT60A…DT80A (4P) (6)	12…24	12…24	**LAD4T3B**
		25…72	25…72	**LAD4T3S**
		73…125	73…125	**LAD4T3G**
		126…250	126…250	**LAD4T3U**
		251…440	251…440	**LAD4T3R**
Screw fixing (4)		–	24	**LA4DB3B**
		–	72	**LA4DB3S**

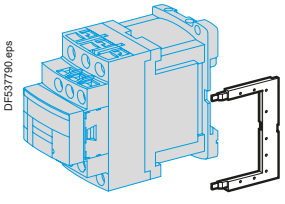

LAD4DDL or LAD4T●DL



LAD4DDL

(1) For satisfactory protection, a suppressor module must be fitted across the coil of each contactor except for Deca green (●●E coil), as surge protection is already embedded.
(2) Clipping-on makes the electrical connection. The overall size of the contactor remains unchanged.
(3) In order to install these accessories, the existing suppression device must first be removed.
(4) Mounting at the top of the contactor on coil terminals A1 and A2.
(5) Not compatible with low consumption contactors.
*(6) From **D09** to **D65A** and from **LC1DT20** to **DT80A**, d.c, low consumption are fitted with a built-in bidirectional peak limiting diode suppressor as standard. This bidirectional peak limiting diode is removable and can therefore be replaced by the user. (See reference above).*

Characteristics:
page B8/91

DB425486.eps

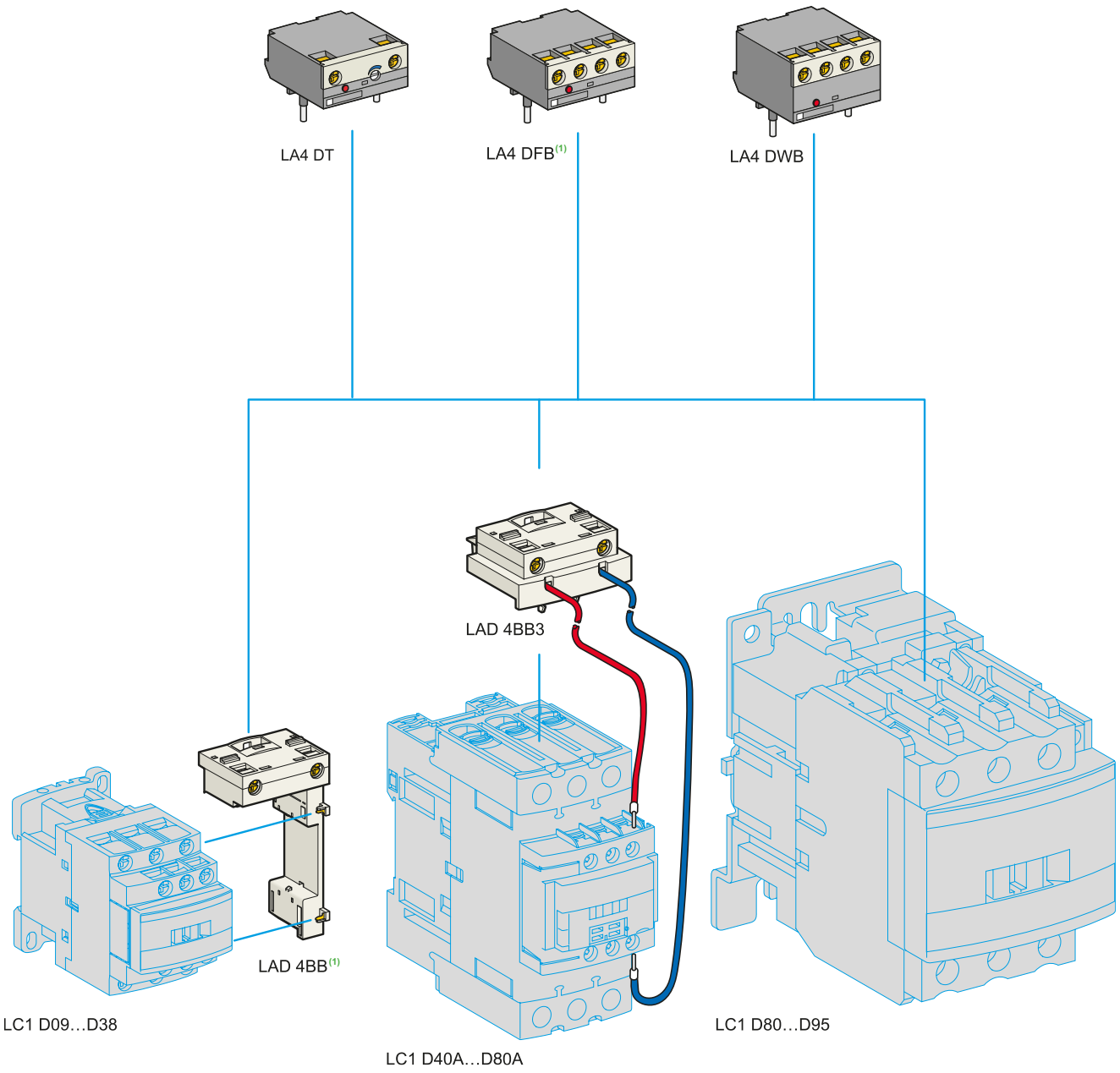

See page opposite for mounting possibilities according to the contactor type.

(1) For Deca contactor with AC coil only.

Product references

PB121548.eps



LA4DT●●

PB121549.eps



LA4DFB

PB121550.eps



LA4DBL

PB121402.eps



LAD4BBVU

Electronic serial timer modules (1)

■ 3-pole contactors LC1D09 to D38: mounted using adapter LAD4BB, to be ordered separately, see below.
■ 3-pole contactors LC1D40A to D65A: mounted using adapter LAD4BB3, to be ordered separately, see below.
■ 3-pole contactors LC1D80 to D150 and 4-pole contactors LC1D40 to D115: mounted directly across terminals A1 and A2 of the contactor.

On-delay type

Operational voltage ∿		Time delay	Reference
24…250 V	**100…250 V**		
LC1D09…D80A (3P)	LC1D80…D150 (3P)	0.1…2 s	**LA4DT0U**
		1.5…30 s	**LA4DT2U**
		25…500 s	**LA4DT4U**

Interface modules

■ 3-pole contactors LC1D09 to D38: mounted using adapter LAD4BB, to be ordered separately, see below.
■ 3-pole contactors LC1D40A to D80A: mounted using adapter LAD4BB3, to be ordered separately, see below.

Relay interface

Operational voltage ∿	Supply voltage E1-E2 (⎓)	Reference
24…250 V		
LC1D09…D150 (3P)	24 V	**LA4DFB**

Static relay interface

Operational voltage ∿		Supply voltage E1-E2 (⎓)	Reference
24…250 V	**100…250 V**		
LC1D09…D80A (3P)	LC1D80…D115 (3P)	24 V	**LA4DWB**

Adapter kit for low control signal

For use on contactors	Composition	Reference
LC1D40A…D80A (3P) (2)	■ 1 LAD4BB3 coil wiring adapter ■ 1 LA4DFB relay interface module	**LA4DBL**

Wiring adapters for coil retrofit of 3 pole contactors

For adapting existing wiring to a new product

For use on contactors			Reference
LC1D09…D38	Without coil suppression		**LAD4BB** (3)
	With coil suppression	∿ 24…48 V	**LAD4BBVE**
		∿ 50…127 V	**LAD4BBVG**
		∿ 110…250 V	**LAD4BBVU**
LC1D40A…80A	Without coil suppression		**LAD4BB3**

(1) For 24 V operation, the contactor must be fitted with a 21 V coil (code Z). See pages B8/45 to B8/48.
(2) The kit is compatible with a coil voltage of ∿ 24 V to ∿ 250 V (B7 to U7) and ⎓ 24 V to ⎓ 250 V (BD to UD).
*(3) **LAD4BB** can not be used with 4 poles contactors.*

Contactors

Characteristics: page B8/92
Dimensions: page B8/94
Schemes: page B8/102

Life Is On Schneider Electric

Product references


PB121360.eps

LA9D3260


PB121363.eps

LA9D11560●


PB121361.eps

LA9D115503


PB121362.eps

LAD96570


PB121364.eps

LA9D11570●


PB121365.eps

LA9D80962


PB121366.eps

LA9D11567

Accessories for main pole and control connections

Description		For use with contactors LC1 ~	For use with contactors LC1 ⎓	Sold in lots of	Unit reference
Connectors for cable, size (1 connector)	4-pole 10 mm²	DT20, DT25	DT20, DT25	1	**LAD92560**
	3-pole 25 mm²	D09…D38	D09…D38	1	**LA9D3260**
EverLink® terminal block	3-pole	D40A…D80A	D40A…D80A	1	**LAD96560**
Connectors for cables (2 connectors)	3-pole 120 mm²	D115, D150	D115, D150	1	**LA9D115603**
	4-pole 120 mm²	D115	D115	1	**LA9D115604**
Connectors for lug type terminals (2 connectors)	3-pole	D1156, D1506	D1156, D1506	1	**LA9D115503**
Protective covers for connectors for lug type terminals	3-pole	D40A6…D80A6	D40A6…D80A6	1	**LAD96570**
		D1156, D1506	D1156, D1506	1	**LA9D115703** (1)
	4-pole	D60A6…D80A6	D60A6…D80A6	1	**LAD96580**
		D1156, D1506	D1156, D1506	1	**LA9D115704**
IP 20 covers for lug type terminals (for mounting with circuit breakers GV3 P●●6 and GV3 L●●6)	3 poles	D40A6…D80A6	D40A6…D80A6	1	**LAD96575**
Links for parallel connection of	2 poles	D09…D38	D09…D38	10	**LA9D2561**
		DT32, DT40 (4P)	DT32, DT40 (4P)	10	**LAD96061**
		D40A…D80A	D40A…D80A	1	**LAD9P32**
		D80, D95	D80, D95	2	**LA9D80961**
	3 poles	D09…D38	D09…D38	10	**LAD9P3** (2)
		D40A…D80A	D40A…D80A	1	**LAD9P33**
		D80, D95	D80, D95	1	**LA9D80962**
	4 poles	DT20, DT25	DT20, DT25	2	**LA9D1263**
		D80	D80	2	**LA9D80963**
Staggered coil connection		–	D80	10	**LA9D09966**
Control circuit take-off from main pole		D80, D95	D80, D95	10	**LA9D8067**
		D115, D150	D115, D150	10	**LA9D11567**
Spreaders for increasing the pole pitch to 45 mm		D115, D150	D115, D150	3	**GV7AC03**

(1) For 3-pole contactors: 1 set of 6 covers, for 4-pole contactors: 1 set of 8 covers.
(2) Separate connecting bar for connecting 2 poles in parallel.



Control Panel Technical Guide:
Mounting and wiring accessories for TeSys K, Deca, F contactors. Star-delta, reverser, low-high speed control motor starters and changeover applications - Product references and details on all kits and wiring accessories.

> Ref. Document: CPTG011_EN

> Click on QR code to download

Product references


PB121367.eps
GV2G245


PB121368.eps
GV1G09


PB121369.eps
GV3S


PB123823.eps
LAD9ET1


PB123804.eps
LAD9ET1S


PB123824.eps
LAD21...22


PB123825.eps
LAD90


PB121374.eps
LAD7X3

Sets of contacts and arc chambers

Description	For contactor		Reference
Sets of contacts	3-pole	LC1D115	**LA5D1158031**
		LC1D150	**LA5D150803**
	4-pole	LC1D115004	**LA5D115804**
Arc chambers	3-pole	LC1D115	**LA5D11550**

Power connection accessories

Terminal block	For supply to one or more GV2G busbar sets	**GV1G09**
Set of 63 A busbars for parallelling of contactors	2 contactors LC1D09…D18 or D25…D38	**GV2G245**
	4 contactors LC1D09…D18 or D25…D38	**GV2G445**
Set of 115 A busbars for parallelling of contactors	2 contactors LC1D40A…D80A	**GV3G264**
	3 contactors LC1D40A…D80A	**GV3G364** (1)
Set of S-shape busbars	For circuit breakers GV3P●● and GV3L●● (3) and contactors LC1D40A…D73A	**GV3S**

Protection accessories

Description	Use	Sold in lots of	Reference
Sealing cover	For LADT, LADR	1	**LA9D901**
Safety cover preventing access to the moving contact carrier	LC1D09…D80A and DT20…DT80A	1	**LAD9ET1**
	Red cover (for safety chain indication)	1	**LAD9ET1S**
	Red cover (for safety chain indication)	1	**LAD9ET3S**
	LC1D115 and D150	1	**LAD9ET4**
	Red cover (for safety chain indication)	1	**LAD9ET4S**

Marking accessories

Description	Use	Sold in lots of	Unit reference
Sheet of 64 blank legends, self-adhesive, 8 x 33 mm (2)	Contactors (except 4P) LC1D80…D115, LADN (4 contacts), LA6DK	10	**LAD21**
Sheet of 112 blank legends, self-adhesive, 8 x 12 mm (2)	LADN (2 contacts), LADT, LADR, LRD	10	**LAD22**
Marker holder snap-in, 8 x 22 mm	4-pole contactors, LC1D80...D115, LA6DK	100	**LA9D92**
Marker holder snap-in, 8 x 18 mm	LC1D09...D65A, LC1DT20...DT80A, LADN (4 contacts), LADT, LADR	100	**LAD90**
Bag of 300 blank legends self-adhesive, 7 x 21 mm	On holder LA9D92	1	**LA9D93**

Mounting accessories

Retrofit plate for screw fixing	For replacement of LC1D40 to D80 with LC1D40A to D80A	1	**LAD7X3**
Mounting plate	For replacement of LC1F115 or F150 with LC1D115 or D150	1	**LA9D730**
Size 4 Allen key, insulated, 1000 V	For use on contactors LC1D40A to LC1D150	5	**LADALLEN4**

*(1) With this set of busbars, any one contactor can be supplied directly by its EverLink® double cage power terminal block. The other two contactors are supplied by the busbar set. The 115 A limitation is therefore applied to these two contactors. Example: 1 **LC1D65A** supplied directly + 1 contactor **LC1D65A** and 1 contactor **LC1D50A** supplied via the busbar set = 115 A. This combination is compatible with busbar set **GV3G364**.*
(2) These legends are for sticking onto the safety cover of the contactors or add-on block, if fitted.
*(3) With 73 A current limit for **GV3L73**, **GV3P73**.*

Product references

PB121375.eps

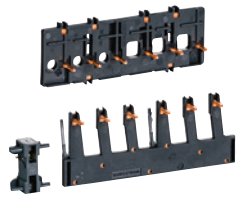

LAD9R1

PB121376.eps

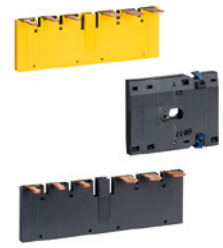

LAD9R3

PB121377.eps



LA9D8069

PB123826.eps



LAD91217

Discover in video

PB121378.eps



LAD91218

Discover in video

For 3-pole reversing contactors for motor control

Contactors with screw clamp terminals or connectors. Horizontally mounted, assembled by customer.

Description	For contactors [1] (2 identical contactors)	Reference
Kits for assembly of reversing contactors		
Kit comprising: ■ a mechanical interlock **LAD9V2** with electrical interlocking **LAD9V1** ■ a set of power connections **LAD9V5** (parallel) and **LAD9V6** (reversing).	LC1D09 to D38	**LAD9R1V**
Kit comprising: ■ a mechanical interlock **LAD9V2** without electrical interlocking ■ a set of power connections **LAD9V5** (parallel) and **LAD9V6** (reversing).	LC1D09 to D38	**LAD9R1**
Kit comprising: ■ a mechanical interlock **LAD4CM** ■ a set of power connections **LA9D65A69**.	LC1D40A to D80A	**LAD9R3**
Mechanical interlocks		
Mechanical interlock with integral electrical interlocking	LC1D80 and D95 (~)	**LA9D4002**
	LC1D80 and D95 (⎓)	**LA9D8002**
	LC1D115 and D150	**LA9D11502**
Mechanical interlock without integral electrical interlocking	LC1D09 to D38	**LAD9V2**
	LC1D40A to D80A	**LAD4CM**
	LC1D80 and D95 (~)	**LA9D50978**
	LC1D80 and D95 (⎓)	**LA9D80978**
Sets of power connections		
Comprising: ■ a set of parallel bars ■ a set of reverser bars.	LC1D09 to D38 with screw clamp terminals or connectors	**LAD9V5** + **LAD9V6**
	LC1D09…D32 with spring terminal connections	**LAD9V12** + **LAD9V13** [2]
	LC1D40A to D80A	**LA9D65A69**
	LC1D80 and D95 (~)	**LA9D8069**
	LC1D80 and D95 (⎓)	**LA9D8069**
	LC1D115 and D150	**LA9D11569**

For star-delta starter

Description	For contactors	Reference	Without timer LADS2
Mounting kit comprising: ■ 1 time delay contact block **LADS2** (**LC1D09…D80**), ■ power circuit connections (**LC1D09…D80**), ■ hardware required for fixing the contactors onto the mounting plate (**LC1D80**).	LC1D09 to D38 [3]	**LAD91217**	**LAD91218**
	LC1D25 to D38 [4]	**LAD93217**	**LAD93218**
	LC1D40A to D80A	**LAD9SD3**	–
	LC1D80	**LA9D8017**	–
Equipment mounting plates	LC1D09 to D38	**LA9D12974**	
	LC1D40A to D80A	–	
	LC1D80	**LA9D80973**	

(1) To order the 2 contactors: see pages B8/23 and B8/29.
(2) To assemble a reversing contactor with spring terminal connections, the following components must be ordered:
*- 1 mechanical interlock **LAD9V2**,*
- 1 upstream power connection kit and 1 downstream power connection kit.
*Upstream power connection kit **LAD9V10**: installed in the Quickfit system with power connection module **LAD341**.*
*(If module **LAD341** is not used, replace **LAD9V10** with **LAD9V12**).*
*Downstream power connection kit **LAD9V11**: installed in the Quickfit system with outgoing terminal block **LAD331**.*
*(If **LAD331** is not used, replace **LAD9V11** with **LAD9V13**).*
(3) For assembly of 3 contactors of the same physical size (depth).
*(4) For assembly of Main + Delta contactors **LC1D25** to **LC1D38** with Star contactor **LC1D09** to **LC1D18**.*



Control Panel Technical Guide:

Mounting and wiring accessories for TeSys K, Deca, F contactors. Star-delta, reverser, low-high speed control motor starters and changeover applications - Product references and details on all kits and wiring accessories.

> Ref. Document: CPTG011_EN

> Click on QR code to download

Dimensions:
pages B8/103 and B8/104

Schemes:
pages B8/105 and B8/106

Product references

PB121379.eps



LADT9R1V

For 4-pole changeover contactor pairs (3-phase distribution + neutral)

Contactors with screw clamp terminals or connectors. Horizontally mounted, assembled by customer.

Description	For contactors [1] (2 identical contactors)	Reference
Kits for assembly of changeover contactor pairs		
Kit comprising: ■ a mechanical interlock LAD9V2 with electrical interlocking LAD9V1, ■ a set of power connections (changeover) LAD9V7.	LC1DT20 to DT40 with screw clamps or connectors	**LADT9R1V**
Kit comprising: ■ a mechanical interlock LAD9V2 without electrical interlocking, ■ a set of power connections (changeover) LAD9V7.	LC1DT20 to DT40 with screw clamps or connectors	**LADT9R1**
Mechanical interlocks		
With integral electrical interlocking	LC1D80004	**LA9D4002**
	LP1D80004	**LA9D8002**
	LC1D115004	**LA9D11502**
Without integral electrical interlocking	LC1DT20 to DT40 with screw clamps or connectors	**LAD9V2** [2]
	LC1DT203 to DT403 with spring terminals	**LAD9V2** [2]
	LC1DT60A and DT80A	**LAD4CM**
	LC1D80004	**LA9D50978**
	LP1D80004	**LA9D80978**
Sets of power connections		
Comprising a set of parallel bars	LC1D80004	**LA9D8070**
	LP1D80004	**LA9D8070**
	LC1D115004	**LA9D11570**
	LC1D80004	**LA9D8070** [2]
	LP1D80004	**LA9D8070** [2]

PB121381.eps



LA9D50978

PB121380.eps



LA9D8070

For 3-pole changeover contactor pairs

Contactors with screw clamp terminals or connectors. Horizontally mounted, assembled by customer.

Description	For contactors [1] (2 identical contactors)	Reference
Kits for assembly of changeover contactor pairs		
Kit comprising: ■ a mechanical interlock LAD4CM ■ a set of parallel bars LA9D65A6	LC1D40A…D80A	**LAD9R3S**
Mechanical interlocks		
Without integral electrical interlocking	LC1D40A…D80A	**LAD4CM**
With integral electrical interlocking	LC1D115 and D150	**LA9D11502**
Sets of power connections		
Comprising a set of parallel bars	LC1D40A…D80A	**LA9D65A6**
	and D150	**LA9D11571**

PB121382.eps

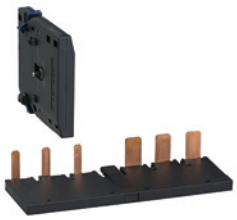

LAD9R3S

(1) To order the 2 contactors: see pages B8/23 and B8/29.
*(2) Order 2 contact blocks **LADN●1** to build the electrical interlock, see page B8/36.*



Control Panel Technical Guide:
Mounting and wiring accessories for TeSys K, Deca, F contactors. Star-delta, reverser, low-high speed control motor starters and changeover applications - Product references and details on all kits and wiring accessories.

> Ref. Document: CPTG011_EN

> Click on QR code to download

Dimensions:
pages B8/103 and B8/104

Schemes:
pages B8/105 and B8/106

PB121383.eps



LXD1●●

a.c coils for ∿ contactors LC1D09...D38 and LC1DT20…DT40

Specifications

Average consumption at 20 °C:
- inrush (cos ϕ = 0.75) 70 VA,
- sealed (cos ϕ = 0.3) 50 Hz: 7 VA, 60 Hz: 7.5 VA.

Operating range (θ ≤ 60 °C): 50 Hz: 0.8…1.1 Uc, 60 Hz: 0.85…1.1 Uc.

Control circuit voltage Uc	Average resistance at 20 °C ±10 %	Inductance of closed circuit	Reference (1)
V	Ω	H	
			50/60 Hz
12	1.33	0.05	**LXD1J7**
24	5.37	0.22	**LXD1B7**
32	10.1	0.39	**LXD1C7**
42	17	0.67	**LXD1D7**
48	21.7	0.87	**LXD1E7**
110	124.1	4.6	**LXD1F7**
115	129.8	5	**LXD1FE7**
120	150.6	5.4	**LXD1G7** (2)
200	410.7	15	**LXD1L7**
208	430.4	16	**LXD1LE7** (2)
220	515.4	18	**LXD1M7** (3)
230	538.6	20	**LXD1P7**
240	562.3	22	**LXD1U7**
277	800.7	29	**LXD1W7** (2)
380	1551	55	**LXD1Q7** (4)
400	1633	60	**LXD1V7**
415	1694	65	**LXD1N7**
440	1993	73	**LXD1R7**
480	2398	87	**LXD1T7** (2)
500	2499	95	**LXD1S7**
575	3294	125	**LXD1SC7**
600	3810	136	**LXD1X7**
660	4656	165	**LXD1YC7**
690	5020	180	**LXD1Y7**

(1) The last 2 digits in the reference represent the voltage code.
(2) Coil for use only on 60 Hz.
*(3) Suitable for use on **230 V** / 50 Hz. In this case, apply a coefficient of 0.6 to the mechanical durability of the contactor (see pages B8/82 and B8/84).*
*(4) Suitable for use on **400 V** / 50 Hz. In this case, apply a coefficient of 0.6 to the mechanical durability of the contactor (see pages B8/82 and B8/84).*

PB121384.eps



LXD3●●

a.c coils for ∿ contactors LC1D40A…D80A, LC1DT60A and LC1DT80A

Specifications

Average consumption at 20 °C:
- inrush (cos ϕ = 0.75) 160 VA,
- sealed (cos ϕ = 0.3) 50 Hz: 15 VA, 60 Hz: 15 VA.

Operating range (θ ≤ 60 °C): 50 Hz: 0.8…1.1 Uc, 60 Hz: 0.85…1.1 Uc.

Control circuit voltage Uc	Average resistance at 20 °C ±10%	Inductance of closed circuit	Reference (1)
V	Ω	H	
			50/60 Hz
24	1.98	0.12	**LXD3B7**
42	6.18	0.37	**LXD3D7**
48	7.97	0.48	**LXD3E7**
110	42.28	2.50	**LXD3F7**
115	48.76	2.74	**LXD3FE7**
120	37.63	2.07	**LXD3G7** (2)
208	105	6.22	**LXD3LE7** (2)
220	182	10	**LXD3M7** (3)
230	192	10.9	**LXD3P7**
240	202	11.9	**LXD3U7**
380	512	29.9	**LXD3Q7** (4)
400	607	33.1	**LXD3V7**
415	635	35.6	**LXD3N7**
440	682	40.1	**LXD3R7**
480	607	33.1	**LXD3T7** (2)
575	1238	68.4	**LXD3SC7**
600	1304	74.5	**LXD3X7**

(1) The last 2 digits in the reference represent the voltage code.
(2) This coil can only be used on 60 Hz.
*(3) Suitable for use on **230 V** / 50 Hz. In this case, apply a coefficient of 0.6 to the mechanical durability of the contactor (see page B8/82 and B8/84).*
*(4) Suitable for use on **400 V** / 50 Hz. In this case, apply a coefficient of 0.6 to the mechanical durability of the contactor (see page B8/82 and B8/84).*

PB121385.eps



LX1D6●●

a.c coils for 3 or 4-pole contactors LC1D40, D50, D65, D80, D95

Specifications

Average consumption at 20 °C:
- inrush (cos ϕ = 0.75) 50 Hz: 200 VA, 60 Hz: 220 VA
- sealed (cos ϕ = 0.3) 50 Hz: 20 VA, 60 Hz: 22 VA.

Operating range (θ ⩽ 55 °C): 0.85…1.1 Uc.

Control circuit voltage Uc	Average resistance at 20°C ±10 %	Inductance of closed circuit	Reference (1)	Average resistance at 20 °C ±10 %	Inductance of closed circuit	Reference (1)
V	Ω	H		Ω	H	
			50 Hz			60 Hz
24	1.4	0.09	**LX1D6B5**	1.05	0.06	**LX1D6B6**
110	31	1.9	**LX1D6F5**	22	1.2	
115	31	1.9	**LX1D6FE5**	–	–	–
208	–	–	**–**	86	4.3	**LX1D6L6**
220	–	–	**–**	98	4.8	**LX1D6M6**
220/230	127	7.5	**LX1D6M5**	–	–	–
240	152	8.7	**LX1D6U5**	120	5.7	**LX1D6U6**
380	–	–	**–**	300	14	**LX1D6Q6**
440	513	30	**LX1D6R5**	392	19	
480	–	–	**–**	480	23	**LX1D6T6**

Specifications

Average consumption at 20 °C:
- inrush (cos ϕ = 0.75) 50/60 Hz: 245 VA at 50 Hz
- sealed (cos ϕ= 0.3) 50/60 Hz: 26 VA at 50 Hz.

Operating range (θ ⩽ 55 °C): 0.85…1.1 Uc.

						50/60 Hz
24	–	–	–	1.22	0.08	**LX1D6B7**
48	–	–	–	5	0.32	**LX1D6E7**
110	–	–	–	26	1.7	**LX1D6F7**
120	–	–	–	32	2	**LX1D6G7**
220/230 (2)	–	–	–	102	6.7	**LX1D6M7**
230	–	–	–	115	7.7	**LX1D6P7**
230/240 (3)	–	–	–	131	8.3	**LX1D6U7**
380/400 (4)	–	–	–	310	20	**LX1D6Q7**
400	–	–	–	349	23	**LX1D6V7**
415	–	–	–	390	24	**LX1D6N7**
440	–	–	–	410	27	**LX1D6R7**

(1) The last 2 digits in the reference represent the voltage code.
*(2) For use on **230 V** / 50 Hz, apply a coefficient of 0.6 to the mechanical durability of the contactor, see page B8/82 and B8/84. This coil can be used on 240 V at 60 Hz.*
(3) This coil can be used on 220/240 V at 50 Hz and on 240 V only at 60 Hz.
*(4) For use on **400 V** / 50 Hz, apply a coefficient of 0.6 to the mechanical durability of the contactor, see page B8/82 and B8/84.*

PB121386.eps

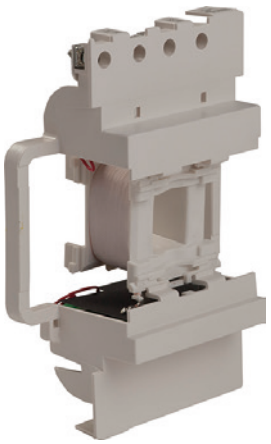

LX1D8●●

a.c coils for 3 or 4-pole contactors LC1D115

Specifications

Average consumption at 20 °C:
- inrush (cos ϕ = 0.8) 50 or 60 Hz: 300 VA
- sealed (cos ϕ = 0.3) 50 or 60 Hz: 22 VA.

Operating range (θ ⩽ 55 °C): 0.85…1.1 Uc.

Control circuit voltage Uc	Average resistance at 20 °C ±10 %	Inductance of closed circuit	Reference (1)	Average resistance at 20 °C ±10 %	Inductance of closed circuit	Reference (1)
V	Ω	H		Ω	H	
			50 Hz			60 Hz
24	–	–	–	0.87	0.07	**LX1D8B6**
32	2.14	0.17	**LX1D8C5**	–	–	–
42	3.91	0.28	**LX1D8D5**	–	–	–
48	–	–	–	3.91	0.28	**LX1D8E6**
127	32.75	2.44	**LX1D8FC5**	–	–	–
208	–	–	–	67.92	5.06	**LX1D8L6**
220	104.77	7.65	**LX1D8M5**	–	–	–
380	338.51	22.26	**LX1D8Q5**	243.07	17.04	**LX1D8Q6**
440	441.56	30.34	**LX1D8R5**	338.51	22.26	**LX1D8R6**
500	566.62	38.12	**LX1D8S5**	–	–	–

a.c coils for 3 or 4-pole contactors LC1D115, LC1D150

Specifications

Average consumption at 20 °C:
- inrush: cos ϕ = 0.9 - 280 to 350 VA
- sealed: cos ϕ = 0.9 - 2 to 18 VA.

Operating range (θ ⩽ 55 °C): 0.8…1.15 Uc.

Coils with integral suppression device fitted as standard, class B.

Control circuit voltage Uc	Average resistance at 20 °C ±10 %	Inductance of closed circuit	Reference (1)	Average resistance at 20 °C ±10 %	Inductance of closed circuit	Reference (1)
V	Ω	H		Ω	H	
						50/60 Hz
24	–	–	–	147	3.03	**LX1D8B7**
32	–	–	–	301	8.28	**LX1D8C7**
48	–	–	–	1061	24.19	**LX1D8E7**
110	–	–	–	4377	109.69	**LX1D8F7**
115	–	–	–	4377	109.69	**LX1D8FE7**
120	–	–	–	4377	109.69	**LX1D8G7**
208	–	–	–	10 895	260.15	**LX1D8LE7**
220	–	–	–	9895	210.72	**LX1D8M7**
230	–	–	–	9895	210.72	**LX1D8P7**
240	–	–	–	9895	210.72	**LX1D8U7**
277	–	–	–	21 988	533.17	**LX1D8UE7**
380	–	–	–	21 011	482.42	**LX1D8Q7**
400	–	–	–	21 011	482.42	**LX1D8V7**
415	–	–	–	21 011	482.42	**LX1D8N7**
440	–	–	–	21 501	507.47	**LX1D8R7**
480	–	–	–	32 249	938.41	**LX1D8T7**

(1) The last 2 digits in the reference represent the voltage code.

PB121387.eps



LX4D7JD

d.c. coils for 3-pole contactors LC1D80 or 4-pole contactors LP1D80

Specifications

Average consumption: 22 W.
Operating range: 0.85…1.1 Uc.

Control circuit voltage Uc	Average resistance at 20 °C ± 10%	Inductance of closed circuit	Reference (1)	Weight
V	Ω	H		kg
12	6.6	0.46	**LX4D7JD**	0.680
24	27	1.89	**LX4D7BD**	0.680

(1) The last 2 digits in the reference represent the voltage code.



LX4D8●D

d.c. coils for contactors LC1D115, D150

Specifications

Consumption: inrush 270 to 365 W, sealed 2.4 to 5.1 W.
Operating range: 0.75…1.2 Uc.
Coils with integral suppression device fitted as standard, class B.

Control circuit voltage Uc	Average resistance at 20 °C ± 10 %	Inductance of closed circuit	Reference (1)	Weight
V	Ω	H		kg
24	147	3.03	**LX4D8BD**	0.300
60	1673	38.44	**LX4D8ND**	0.300
220	9895	210.72	**LX4D8MD**	0.300
250	18 022	345.40	**LX4D8UD**	0.300

(1) The last 2 digits in the reference represent the voltage code.

Product references

PB113075_12.eps



GC2520

PB113078_18.eps



GC4040

PB113079_24.eps



GC10020

Modular Contactors - 17.5 mm pitch for modular panels

No. of poles		Number of 17.5 mm modules	Commercial reference 50 Hz coil - different voltages					Sold in lots of
			12 V	24 V	48 V	110 V	220/240 V	
Maximum current rating category AC-7a - 16 A								
1	–	1	–	–	GC1610E5	–	GC1610M5 ★	12
1	1	1	–	GC1611B5	–	GC1611F5	GC1611M5 ★	12
2	–	1	–	GC1620B5	–	GC1620F5 ★	GC1620M5 ★	12
2	2	2	–	–	–	GC1622F5 ★	GC1622M5	6
3	–	2	–	–	–	–	GC1630M5 ★	6
4	–	2	–	–	–	GC1640F5	GC1640M5 ★	6
Maximum current rating category AC-7a - 25 A								
–	2	1	–	GC2502B5	GC2502E5	★	GC2502M5 ★	12
–	4	2	–	GC2504B5	GC2504E5	★	GC2504M5 ★	6
1	–	1	–	GC2510B5	–	–	GC2510M5 ★	12
1	1	1	–	–	–	–	GC2511M5 ★	12
2	–	1	GC2520J5	GC2520B5	–	–	GC2520M5 ★	12
2	2	2	–	GC2522B5	–	–	GC2522M5 ★	6
3	–	2	–	–	–	GC2530F5	GC2530M5 ★	6
3	1	2	–	–	–	–	GC2531M5	6
4	–	2	–	–	GC2540E5	GC2540F5 ★	GC2540M5 ★	6
Maximum current rating category AC-7a - 40 A								
–	2	2	–	–	–	–	GC4002M5 ★	6
–	4	3	–	–	–	–	GC4004M5	4
1	1	2	–	–	–	–	GC4011M5 ★	6
2	–	2	–	–	–	GC4020F5 ★	GC4020M5 ★	6
2	2	3	–	–	–	–	GC4022M5	4
3	–	3	–	–	–	–	GC4030M5 ★	4
4	–	3	–	–	–	–	GC4040M5 ★	4
Maximum current rating category AC-7a - 63 A								
–	2	2	–	–	–	–	GC6302M5	6
–	4	3	–	GC6304B5	–	–	GC6304M5	4
2	–	2	–	–	–	–	GC6320M5	6
3	–	3	–	–	–	–	GC6330M5 ★	4
4	–	3		GC6340B5	GC6340E5	–	GC6340M5 ★	4
Maximum current rating category AC-7a - 100 A								
2	–	3	–	–	–	–	GC10020M5	4
4	–	6	–	GC10040B5	–	–	GC10040M5 ★	2

★ *for 60 Hz coil replace last figure 5 by 6.*

Contactors

Characteristics:
pages B8/108 to B8/114

Dimensions, schemes:
pages B8/115 to B8/117

Product references

PB113083_13.eps



GY2520M5

PB113087_26.eps



GY6340M5

Modular "dual tariff" contactors - 17.5 mm pitch for modular panels

No. of poles		Number of 17.5 mm modules	Commercial reference 50 Hz coil - different voltages					Sold in lots of
			12 V	24 V	48 V	110 V	220/240 V	
Maximum current rating category AC-7a - 16 A								
2	–	1	–	**GY1620B5**		–	**GY1620M5**	12
4	–	2	–	–	–	–	**GY1640M5**	6
Maximum current rating category AC-7a - 25 A								
2	–	1	–	–	–	–	**GY2520M5** ★	12
4	–	2	–	–	–	–	**GY2540M5**	6
Maximum current rating category AC-7a - 40 A								
2	–	2	–	–	–	–	**GY4020M5**	6
4	–	3	–	–	–	–	**GY4040M5**	4
Maximum current rating category AC-7a - 63 A								
2	–	2	–	–	–	–	**GY6320M5**	6
4	–	3	–	**GY6340B5**	–	–	**GY6340M5**	4

★ *for 60 Hz coil replace last figure 5 by 6.*

Characteristics:
pages B8/118 to B8/120

Dimensions, schemes:
pages B8/121 and B8/122

Schemes:
page B8/122

Life Is On Schneider Electric

Product references

DB438291.eps



GF1620B7

Modular impulse relays - 17.5 mm pitch for modular panels						
Maximum current rating category AC-1	Composition		Coil voltages ~ 50/60 Hz	Coil voltages ⎓	Sold in lots of	Unit reference
A			V	V		
16	2	–	12	6	12	**GF1620J7**
			24	12	12	**GF1620B7**
			110	48	12	**GF1620F7**
			230/240	110	12	**GF1620U7**
	1	1	12	6	12	**GF1611J7**
			24	12	12	**GF1611B7**
			220	–	12	**GF1611M7**
			230/240	110	12	**GF1611U7**

Contactors

Characteristics:
pages B8/123 to B8/126

Dimensions, schemes:
page B8/127

Product references

PB113093_13.eps



GAP23

Instantaneous auxiliary contact blocks

Number of contacts	Number of poles			Reference
	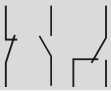			
2	1	1	–	**GAC0521**
	–	2	–	**GAC0531**
	–	–	1	**GAC0511**

PB104483-40.eps



GAC5

PB104486_34.eps



A9A15922

PB104487_49.eps



A9A15923

Accessories

Description	For use on contactor	Number of modules	Operational voltage in V	Sold in lots of	Unit reference
Coil suppression blocks comprising 2 RC circuits	–	1	12…48	1	**GAP21**
			110…240	1	**GAP23**
Ventilation 1/2 module clips onto ⊔ rail	–	1/2	–	10	**GAC5**
Set of screw shields (10 top parts + 10 bottom parts)	40 or 63 A 2 contacts	2	–	1	**A9A15922**
	40 or 63 A 3 or 4 contacts	3	–	1	**A9A15923**

Dimensions, schemes: page B8/116
Schemes: page B8/117

Life Is On Schneider Electric

Product references

DPE09P7
DPE12P7
DPE1801P7
DPE18P7
DPE2501P7
DPE25P7
DPE32B7
DPE32P7
GAC0511
GAC0521
GAC0531
GAC5
GAP21
GAP23
GC10020M5
GC10040M5
GC1610M5
GC1611B5
GC1611F5
GC1611M5
GC1620B5
GC1620D7
GC1620F5
GC1620M5
GC1620M6
GC1622F5
GC1622M5
GC1630M5
GC1640F5
GC1640M5
GC2502B5
GC2502E5
GC2502M5
GC2504B5
GC2504M5
GC2510B5
GC2510M5
GC2511M5
GC2520B5
GC2520F6
GC2520J5
GC2520M5
GC2520M6
GC2522B5
GC2522M5
GC2530F5
GC2530M5
GC2530M6
GC2531M5
GC2540E5
GC2540M5
GC2540M6
GC4002M5
GC4004M5
GC4011M5
GC4020F5
GC4020F6
GC4020M5
GC4020M6
GC4022M5
GC4030M5
GC4040M5
GC4040M6
GC6302M5
GC6304B5
GC6304M5
GC6320M5
GC6330M5
GC6330M6
GC6340B5
GC6340M5
GF1611B7
GF1611M7
GF1611U7
GF1620B7
GF1620F7
GF1620U7
GS2AH4120F
GV1G09
GV2G05
GV2G245
GV2G254
GV2G272
GV2G345
GV2G354
GV2G445
GV2G454
GV2G472
GV2G554
GV3G264
GV3G364
GV3S
GY1620B5
GY1620M5
GY2520M5
GY2520M6
GY2540M5
GY4020M5
GY4040M5
GY6320M5
GY6340M5
LA1DX02
LA1DX11
LA1DX20
LA1DY20
LA1DZ31
LA1DZ40
LA1KN02
LA1KN023
LA1KN02M
LA1KN04
LA1KN043
LA1KN11
LA1KN113
LA1KN11M
LA1KN13
LA1KN133
LA1KN20
LA1KN203
LA1KN207
LA1KN22
LA1KN223
LA1KN223M
LA1KN22M
LA1KN31
LA1KN313
LA1KN316
LA1KN317
LA1KN31M
LA1KN40
LA1KN403
LA1KN407
LA1SK01
LA1SK02
LA1SK11
LA1SK20
LA2KT2E
LA2KT2U
LA4DA1E
LA4DA1G
LA4DA1U
LA4DA2E
LA4DA2G
LA4DA2N
LA4DA2U
LA4DB3B
LA4DB3S
LA4DBL
LA4DC1U
LA4DC3U
LA4DE1E
LA4DE1G
LA4DE1U
LA4DE2E
LA4DE2G
LA4DE2U
LA4DE3E
LA4DE3U
LA4DFB
LA4DT0U
LA4DT2U
LA4DT4U
LA4DWB
LA4KA1U
LA4KC1B
LA4KC1E
LA4KC2B
LA4KE1B
LA4KE1E
LA4KE1FC
LA4KE1UG
LA4SKC1U
LA4SKE1E
LA4SKE1U
LA5D11550
LA5D1158031
LA5D115804
LA5D150803
LA6DK10C
LA6DK10J
LA6DK10U
LA6DK20B
LA6DK20E
LA6DK20F
LA6DK20J
LA6DK20M
LA6DK20Q
LA7D902
LA9D0921
LA9D09976
LA9D09980
LA9D09981
LA9D11502
LA9D11517
LA9D115503
LA9D115603
LA9D115604
LA9D11567
LA9D11569
LA9D115691
LA9D115692
LA9D11570
LA9D115703
LA9D115704
LA9D11571
LA9D1263
LA9D1269
LA9D12974
LA9D15017
LA9D16906
LA9D1860
LA9D1869
LA9D2561
LA9D2569
LA9D3260
LA9D3269
LA9D32974
LA9D4002
LA9D40961
LA9D40963
LA9D5017
LA9D50978
LA9D511
LA9D6567
LA9D6569
LA9D65A6
LA9D65A69
LA9D730
LA9D8002
LA9D8017
LA9D8018
LA9D8067
LA9D8069
LA9D80691
LA9D8070
LA9D8079
LA9D80961
LA9D80962
LA9D80963
LA9D80973
LA9D80978
LA9D894
LA9D898
LA9D90
LA9D901
LA9D92
LA9D93
LA9D99
LA9E01
LA9E02
LA9K0969
LA9K105I
LA9K105S
LA9KNS35
LAD21
LAD22
LAD4BB
LAD4BB3
LAD4BBVE
LAD4BBVG
LAD4BBVU
LAD4CM
LAD4D3U
LAD4DDL
LAD4RC3E
LAD4RC3G
LAD4RC3N
LAD4RC3U
LAD4RCE
LAD4RCG
LAD4RCU
LAD4T3B
LAD4T3G
LAD4T3R
LAD4T3S
LAD4T3U
LAD4TB
LAD4TBDL
LAD4TGDL
LAD4TS
LAD4TSDL
LAD4TUDL
LAD4V3E
LAD4V3G
LAD4V3U
LAD4VE
LAD4VG
LAD4VU
LAD6K10B
LAD6K10E
LAD6K10F
LAD6K10J
LAD6K10K
LAD6K10M
LAD7X3
LAD8N02
LAD8N026
LAD8N11
LAD8N116
LAD8N11G
LAD8N20
LAD8N206
LAD90
LAD901
LAD9011
LAD903
LAD904
LAD91209
LAD91217
LAD91218
LAD912GV
LAD92560
LAD93217
LAD93218
LAD96061
LAD96560
LAD96566
LAD96570
LAD96575
LAD96580
LAD9722
LAD9723
LAD9744
LAD9BB18
LAD9BB32
LAD9DL3
LAD9ET1
LAD9ET1S
LAD9ET2
LAD9ET3S
LAD9ET4
LAD9ET4S
LAD9P3
LAD9P32
LAD9P33
LAD9R1
LAD9R11
LAD9R1V
LAD9R3
LAD9R3S
LAD9SD3
LAD9SD3S
LAD9V1
LAD9V10
LAD9V11
LAD9V12
LAD9V13
LAD9V14
LAD9V15
LAD9V16
LAD9V17
LAD9V2
LAD9V5
LAD9V6
LAD9VP1
LAD9VP2
LAD9VP3
LAD9VP4
LADALLEN4
LADC22
LADC223
LADC226
LADN01
LADN02
LADN023
LADN026
LADN04
LADN043
LADN046
LADN10
LADN11
LADN113
LADN113G
LADN113P
LADN116
LADN11G
LADN11P
LADN13
LADN133
LADN136
LADN13G
LADN13P
LADN20
LADN203
LADN206
LADN22
LADN223
LADN223G
LADN226
LADN22G
LADN22P
LADN22S
LADN31
LADN313
LADN313G
LADN316
LADN31G
LADN31P
LADN40
LADN403
LADN403G
LADN406
LADN40G
LADR0
LADR03
LADR06
LADR2
LADR23
LADR26
LADR4
LADR43
LADR46
LADS2
LADS23
LADS26
LADT0
LADT03
LADT06
LADT2
LADT23
LADT26
LADT4
LADT46
LADT9R1
LADT9R1V
LAZR90M
LAZR90Q
LAZR91F
LC1D066BD
LC1D066F7
LC1D066M7
LC1D06P7

This document is current. Click on the product reference to get the most recent availability status (hyperlink to **se.com** product datasheet).
If your product variant is no longer available, please consult your distributor or regional sales office.

Product references

LC1D093B7
LC1D093BD
LC1D093BL
LC1D093E7
LC1D093ED
LC1D093F7
LC1D093FD
LC1D093FE7
LC1D093FL
LC1D093G7
LC1D093GD
LC1D093M7
LC1D093MD
LC1D093N7
LC1D093ND
LC1D093P7
LC1D093U7
LC1D096B7
LC1D096BD
LC1D096BL
LC1D096CD
LC1D096F7
LC1D096FD
LC1D096FL
LC1D096G7
LC1D096KD
LC1D096L7
LC1D096M7
LC1D096MD
LC1D096ND
LC1D096P7
LC1D096Q7
LC1D096R7
LC1D096SD
LC1D096SL
LC1D0986FD
LC1D098B7
LC1D098BD
LC1D098BL
LC1D098CD
LC1D098E7
LC1D098ED
LC1D098F7
LC1D098FD
LC1D098G7
LC1D098JD
LC1D098M7
LC1D098MD
LC1D098P7
LC1D098U7
LC1D099F7
LC1D099G7
LC1D09B5
LC1D09B7
LC1D09BD
LC1D09BL
LC1D09BNE
LC1D09C7
LC1D09CD
LC1D09D5
LC1D09D7
LC1D09E5
LC1D09E7
LC1D09ED
LC1D09EE7
LC1D09EHE
LC1D09EL
LC1D09F7
LC1D09FC7
LC1D09FD
LC1D09FE7
LC1D09FL
LC1D09G7
LC1D09GD
LC1D09JD
LC1D09JL
LC1D09K7
LC1D09KUE
LC1D09L7
LC1D09LE7
LC1D09M7
LC1D09MD
LC1D09N7
LC1D09ND
LC1D09P5
LC1D09P7
LC1D09Q7
LC1D09R7
LC1D09RD
LC1D09SD
LC1D09T7
LC1D09U7
LC1D09UD
LC1D09V7
LC1D09W7
LC1D09X7
LC1D09Y7
LC1D1150046BD
LC1D1150046F7
LC1D1150046M5
LC1D1150046M7
LC1D1150046N5
LC1D1150046P7
LC1D1150046U5
LC1D1150046U7
LC1D115004B7
LC1D115004BD
LC1D115004ED
LC1D115004F7
LC1D115004FD
LC1D115004FE7
LC1D115004G6
LC1D115004M5
LC1D115004M7
LC1D115004MD
LC1D115004P5
LC1D115004P7
LC1D115004Q5
LC1D115004RD
LC1D115004U7
LC1D115004V7
LC1D115006F7C
LC1D11500F7CS003
LC1D11500M7CS003
LC1D1156B7
LC1D1156BD
LC1D1156E7
LC1D1156F5
LC1D1156F7
LC1D1156FD
LC1D1156FE7
LC1D1156G7
LC1D1156L7
LC1D1156LE7
LC1D1156M5
LC1D1156M7
LC1D1156MD
LC1D1156N7
LC1D1156P7
LC1D1156R7
LC1D1156SD
LC1D1156U7
LC1D115B7
LC1D115BD
LC1D115D7
LC1D115E5
LC1D115E7
LC1D115ED
LC1D115F5
LC1D115F6
LC1D115F7
LC1D115FD
LC1D115FE7
LC1D115G6
LC1D115G7
LC1D115GD
LC1D115K7
LC1D115L7
LC1D115LE7
LC1D115M5
LC1D115M7
LC1D115MD
LC1D115N7
LC1D115P5
LC1D115P7
LC1D115Q7
LC1D115R7
LC1D115RD
LC1D115S7
LC1D115SD
LC1D115T6
LC1D115T7
LC1D115U5
LC1D115U7
LC1D115V7
LC1D123B7
LC1D123BD
LC1D123BL
LC1D123E7
LC1D123ED
LC1D123F7
LC1D123FD
LC1D123G7
LC1D123M7
LC1D123P7
LC1D123V7
LC1D126B7
LC1D126BD
LC1D126BL
LC1D126ED
LC1D126F7
LC1D126FD
LC1D126FL
LC1D126G7
LC1D126KD
LC1D126L7
LC1D126M7
LC1D126SD
LC1D1283V7
LC1D1286FD
LC1D1286G7
LC1D1286L7
LC1D1286LE7
LC1D1286P7
LC1D1286U7
LC1D128B7
LC1D128BD
LC1D128BL
LC1D128CD
LC1D128D7
LC1D128E7
LC1D128ED
LC1D128EL
LC1D128F7
LC1D128FD
LC1D128G7
LC1D128L7
LC1D128M7
LC1D128MD
LC1D128P7
LC1D128RD
LC1D128T7
LC1D128U7
LC1D129SD
LC1D12B5
LC1D12B7
LC1D12BD
LC1D12BL
LC1D12BNE
LC1D12C7
LC1D12CD
LC1D12D5
LC1D12D7
LC1D12E5
LC1D12E7
LC1D12ED
LC1D12EHE
LC1D12EL
LC1D12F7
LC1D12FD
LC1D12FE7
LC1D12G7
LC1D12GD
LC1D12JD
LC1D12JL
LC1D12K7
LC1D12KUE
LC1D12L7
LC1D12LE7
LC1D12M7
LC1D12MD
LC1D12N7
LC1D12ND
LC1D12P5
LC1D12P7
LC1D12Q7
LC1D12R7
LC1D12RD
LC1D12SD
LC1D12T7
LC1D12U7
LC1D12V7
LC1D12X7
LC1D12Y7
LC1D12Z7
LC1D15000F7CS003
LC1D15000M7CS003
LC1D1506B7
LC1D1506BD
LC1D1506E7
LC1D1506F7
LC1D1506FD
LC1D1506G7
LC1D1506K7
LC1D1506LE7
LC1D1506M7
LC1D1506MD
LC1D1506N7
LC1D1506P7
LC1D1506Q7
LC1D1506R7
LC1D1506SD
LC1D1506U7
LC1D150B7
LC1D150BD
LC1D150D7
LC1D150E7
LC1D150ED
LC1D150F7
LC1D150FD
LC1D150FE7
LC1D150G7
LC1D150GD
LC1D150K7
LC1D150LE7
LC1D150M7
LC1D150MD
LC1D150N7
LC1D150P7
LC1D150Q7
LC1D150R7
LC1D150SD
LC1D150T7
LC1D150U7
LC1D150V7
LC1D17000F7CS003
LC1D17000M7CS003
LC1D183B7
LC1D183BD
LC1D183BL
LC1D183E7
LC1D183ED
LC1D183F7
LC1D183FE7
LC1D183FL
LC1D183G7
LC1D183M7
LC1D183MD
LC1D183P7
LC1D183U7
LC1D186B7
LC1D186BD
LC1D186BL
LC1D186BLJP
LC1D186E7
LC1D186EL
LC1D186F7
LC1D186FD
LC1D186G7
LC1D186K7
LC1D186L7
LC1D186M7
LC1D186ND
LC1D186P7
LC1D186R7
LC1D186SD
LC1D186SL
LC1D186U7
LC1D1883P7
LC1D188B7
LC1D188BD
LC1D188BL
LC1D188D7
LC1D188E7
LC1D188ED
LC1D188F7
LC1D188FD
LC1D188G7
LC1D188M7
LC1D188MD
LC1D188P7
LC1D188U7
LC1D18B5
LC1D18B7
LC1D18BD
LC1D18BL
LC1D18BNE
LC1D18C7
LC1D18CD
LC1D18D5
LC1D18D7
LC1D18E5
LC1D18E7
LC1D18ED
LC1D18EHE
LC1D18EL
LC1D18F7
LC1D18FC7
LC1D18FD
LC1D18FE7
LC1D18FL
LC1D18G7
LC1D18GD
LC1D18J7
LC1D18JD
LC1D18JL
LC1D18K7
LC1D18KUE
LC1D18L7
LC1D18LE7
LC1D18M7
LC1D18MD
LC1D18ML
LC1D18N7
LC1D18ND
LC1D18P5
LC1D18P7
LC1D18Q7
LC1D18R7
LC1D18SC7
LC1D18SD
LC1D18T7
LC1D18U7
LC1D18V7
LC1D253B7
LC1D253BD
LC1D253BL
LC1D253E7
LC1D253F7
LC1D253FD
LC1D253M7
LC1D253MD
LC1D253P7
LC1D253R7
LC1D253V7
LC1D256B7
LC1D256BD
LC1D256BL
LC1D256F7
LC1D256FD
LC1D256G7
LC1D256K7
LC1D256KD
LC1D256L7
LC1D256M7
LC1D256P7
LC1D256U7
LC1D2583P7
LC1D2586BD
LC1D2586F7
LC1D2586FD
LC1D258B7
LC1D258BD
LC1D258BL
LC1D258C7
LC1D258D7

This document is current. Click on the product reference to get the most recent availability status (hyperlink to **se.com** product datasheet). If your product variant is no longer available, please consult your distributor or regional sales office.

Life Is On Schneider Electric

Product references

LC1D258E7	LC1D326GD	LC1D38E7	LC1D40AD5	LC1D50ACD	LC1D65A3FE7
LC1D258ED	LC1D326K7	LC1D38ED	LC1D40AD7	LC1D50AD5	LC1D65A3P7
LC1D258F7	LC1D326KD	LC1D38EHE	LC1D40AE5	LC1D50AD7	LC1D65A6B7
LC1D258FD	LC1D326L7	LC1D38EL	LC1D40AE7	LC1D50AE5	LC1D65A6BBE
LC1D258FE7	LC1D326M7	LC1D38F7	LC1D40AEHE	LC1D50AE7	LC1D65A6BD
LC1D258G7	LC1D326P7	LC1D38FD	LC1D40AF7	LC1D50AEHE	LC1D65A6BNE
LC1D258GD	LC1D326R7	LC1D38FE7	LC1D40AFC7	LC1D50AF7	LC1D65A6ED
LC1D258M7	LC1D32B5	LC1D38FL	LC1D40AFE7	LC1D50AFC7	LC1D65A6EHE
LC1D258MD	LC1D32B7	LC1D38G7	LC1D40AG7	LC1D50AFD	LC1D65A6F7
LC1D258P7	LC1D32BD	LC1D38JD	LC1D40AGD	LC1D50AFE7	LC1D65A6FD
LC1D258SD	LC1D32BL	LC1D38JL	LC1D40AJD	LC1D50AG7	LC1D65A6G7
LC1D258U7	LC1D32BNE	LC1D38KUE	LC1D40AK7	LC1D50AGD	LC1D65A6K7
LC1D258V7	LC1D32C7	LC1D38M7	LC1D40AKUE	LC1D50AJ5	LC1D65A6KUE
LC1D25B5	LC1D32D5	LC1D38MD	LC1D40AL7	LC1D50AJD	LC1D65A6M7
LC1D25B7	LC1D32D7	LC1D38N7	LC1D40ALE7	LC1D50AK7	LC1D65A6MD
LC1D25BD	LC1D32E5	LC1D38P5	LC1D40AM7	LC1D50AKUE	LC1D65A6ND
LC1D25BL	LC1D32E7	LC1D38P7	LC1D40AN7	LC1D50AL7	LC1D65A6P7
LC1D25BNE	LC1D32ED	LC1D38Q7	LC1D40AND	LC1D50ALE7	LC1D65A6R7
LC1D25C7	LC1D32EHE	LC1D38R7	LC1D40AP5	LC1D50AM7	LC1D65A6SD
LC1D25CD	LC1D32EL	LC1D38SD	LC1D40AP7	LC1D50AMD	LC1D65A6U7
LC1D25D5	LC1D32F7	LC1D38U7	LC1D40AQ7	LC1D50AN7	LC1D65A6UD
LC1D25D7	LC1D32FC7	LC1D38V7	LC1D40AR7	LC1D50AND	LC1D65AB5
LC1D25E5	LC1D32FD	LC1D40004E7	LC1D40AS7	LC1D50AP5	LC1D65AB6
LC1D25E7	LC1D32FE7	LC1D40004F7	LC1D40AT7	LC1D50AP7	LC1D65AB7
LC1D25ED	LC1D32FL	LC1D40004G6	LC1D40AU7	LC1D50AQ7	LC1D65ABBE
LC1D25EHE	LC1D32G7	LC1D40004M7	LC1D40AU7C	LC1D50AR7	LC1D65ABD
LC1D25EL	LC1D32GD	LC1D40004P7	LC1D40AV7	LC1D50ASD	LC1D65ABNE
LC1D25F7	LC1D32JD	LC1D40008B7	LC1D40AX7	LC1D50AT7	LC1D65ACD
LC1D25FC7	LC1D32JL	LC1D40008D7	LC1D40B7	LC1D50AU7	LC1D65AD5
LC1D25FD	LC1D32K7	LC1D40008E5	LC1D40BD	LC1D50AU7C	LC1D65AD7
LC1D25FE7	LC1D32KUE	LC1D40008E7	LC1D40D7C	LC1D50AV7	LC1D65AE5
LC1D25FL	LC1D32L7	LC1D40008F7	LC1D40E7	LC1D50AX7	LC1D65AE7
LC1D25G7	LC1D32LE7	LC1D40008G6	LC1D40ED	LC1D50B7	LC1D65AEHE
LC1D25GD	LC1D32M7	LC1D40008G7	LC1D40F7	LC1D50BD	LC1D65AF7
LC1D25JD	LC1D32MD	LC1D40008M5	LC1D40G6	LC1D50E7	LC1D65AFC7
LC1D25JL	LC1D32ML	LC1D40008M7	LC1D40G7M	LC1D50ED	LC1D65AFE7
LC1D25KUE	LC1D32N7	LC1D40008N7	LC1D40L6	LC1D50F7	LC1D65AG7
LC1D25L7	LC1D32ND	LC1D40008P7	LC1D40M7	LC1D50G6	LC1D65AJD
LC1D25LE7	LC1D32P5	LC1D40008U7	LC1D40P7	LC1D50G7	LC1D65AK7
LC1D25M7	LC1D32P7	LC1D406G7	LC1D40P7C	LC1D50L6	LC1D65AKUE
LC1D25MD	LC1D32Q7	LC1D40A3B7	LC1D40T6	LC1D50LE7	LC1D65AL7
LC1D25N7	LC1D32R7	LC1D40A3BD	LC1D40U7	LC1D50M7	LC1D65ALE7
LC1D25ND	LC1D32S7	LC1D40A3E7	LC1D40U7M	LC1D50N7	LC1D65AM7
LC1D25P5	LC1D32SD	LC1D40A3F7	LC1D475E7C	LC1D50P7	LC1D65AN7
LC1D25P7	LC1D32T7	LC1D40A3M7	LC1D506FW	LC1D50P7C	LC1D65AP5
LC1D25Q7	LC1D32U7	LC1D40A3MD	LC1D50A3BD	LC1D50T6	LC1D65AP7
LC1D25R7	LC1D32V7	LC1D40A3ND	LC1D50A3E7	LC1D50U7	LC1D65AQ7
LC1D25S7	LC1D32X7	LC1D40A3P7	LC1D50A3FD	LC1D50U7C	LC1D65AR7
LC1D25SC7	LC1D32Y7	LC1D40A6B7	LC1D50A3JD	LC1D65004F7	LC1D65ASD
LC1D25SD	LC1D383BL	LC1D40A6BBE	LC1D50A3M7	LC1D65004G6	LC1D65AT7
LC1D25T7	LC1D383E7	LC1D40A6BD	LC1D50A3P7	LC1D65004G7	LC1D65AU7
LC1D25U7	LC1D383P7	LC1D40A6BNE	LC1D50A3RD	LC1D65004P7	LC1D65AV7
LC1D25UD	LC1D386B7	LC1D40A6EHE	LC1D50A6B7	LC1D65008B7	LC1D65AX7
LC1D25V7	LC1D386BD	LC1D40A6FD	LC1D50A6BBE	LC1D65008D7	LC1D65B7
LC1D25X7	LC1D386BL	LC1D40A6G7	LC1D50A6BD	LC1D65008E7	LC1D65BD
LC1D323B7	LC1D386CD	LC1D40A6GD	LC1D50A6BNE	LC1D65008F7	LC1D65D7C
LC1D323BD	LC1D386F7	LC1D40A6KUE	LC1D50A6CD	LC1D65008FE7	LC1D65E7
LC1D323BL	LC1D386FD	LC1D40A6LE7	LC1D50A6ED	LC1D65008G6	LC1D65ED
LC1D323ED	LC1D386K7	LC1D40A6M7	LC1D50A6EHE	LC1D65008G7	LC1D65F7
LC1D323F7	LC1D386L7	LC1D40A6P7	LC1D50A6F7	LC1D65008L7	LC1D65FD
LC1D323FE7	LC1D386M7	LC1D40A6T7	LC1D50A6FD	LC1D65008M5	LC1D65G6
LC1D323FL	LC1D386MD	LC1D40A6U7	LC1D50A6KUE	LC1D65008M7	LC1D65L6
LC1D323M7	LC1D386SL	LC1D40A6UD	LC1D50A6M7	LC1D65008P7	LC1D65M7
LC1D323MD	LC1D38B5	LC1D40AB5	LC1D50A6P7	LC1D65008R7	LC1D65N7
LC1D323P7	LC1D38B7	LC1D40AB6	LC1D50A6SD	LC1D65008U7	LC1D65P7
LC1D326B7	LC1D38BD	LC1D40AB7	LC1D50AB5	LC1D65008V7	LC1D65T6
LC1D326BD	LC1D38BL	LC1D40ABBE	LC1D50AB6	LC1D65A3B7	LC1D65U7
LC1D326BL	LC1D38BNE	LC1D40ABD	LC1D50AB7	LC1D65A3BD	LC1D800046M7
LC1D326F7	LC1D38D5	LC1D40ABNE	LC1D50ABBE	LC1D65A3E7	LC1D800046P7
LC1D326FD	LC1D38D7	LC1D40AC7	LC1D50ABD	LC1D65A3F7	LC1D80004B7
LC1D326G7	LC1D38E5	LC1D40ACD	LC1D50ABNE	LC1D65A3FD	LC1D80004E7

This document is current. Click on the product reference to get the most recent availability status (hyperlink to **se.com** product datasheet). If your product variant is no longer available, please consult your distributor or regional sales office.

Product references

LC1D80004F5
LC1D80004F7
LC1D80004FE7
LC1D80004G6
LC1D80004G7
LC1D80004M5
LC1D80004M7
LC1D80004N5
LC1D80004N7
LC1D80004P5
LC1D80004P7
LC1D80004Q7
LC1D80004U5
LC1D80004U7
LC1D80004V7
LC1D80008D7
LC1D80008E7
LC1D80008F7
LC1D80008FE7
LC1D80008G6
LC1D80008G7
LC1D80008M7
LC1D80008P7
LC1D80008Q7
LC1D80008U7
LC1D806B7
LC1D806BD
LC1D806F5
LC1D806F7
LC1D806FD
LC1D806FW
LC1D806G7
LC1D806K7
LC1D806L7
LC1D806LE7
LC1D806M7
LC1D806P7
LC1D806VD
LC1D80A3B7
LC1D80A3E7
LC1D80A3P7
LC1D80A6BBE
LC1D80A6BNE
LC1D80A6EHE
LC1D80A6KUE
LC1D80A6M7
LC1D80A6P7
LC1D80AB7
LC1D80ABBE
LC1D80ABNE
LC1D80AE7
LC1D80AEHE
LC1D80AF7
LC1D80AFE7
LC1D80AG7
LC1D80AKUE
LC1D80AM7
LC1D80AN7
LC1D80AP7
LC1D80AQ7
LC1D80AR7
LC1D80AU7
LC1D80AV7
LC1D80B5
LC1D80B7
LC1D80BD
LC1D80BW
LC1D80CW
LC1D80D7
LC1D80E5
LC1D80E7
LC1D80ED
LC1D80F5
LC1D80F7
LC1D80FD
LC1D80FE7
LC1D80FW
LC1D80G6
LC1D80G7
LC1D80G7M
LC1D80GD
LC1D80K7
LC1D80L6
LC1D80L7
LC1D80M5
LC1D80M7
LC1D80MD
LC1D80MW
LC1D80N7
LC1D80ND
LC1D80P5
LC1D80P7
LC1D80Q5
LC1D80Q7
LC1D80R7
LC1D80S5
LC1D80SD
LC1D80SW
LC1D80T6
LC1D80U5
LC1D80U7
LC1D80U7M
LC1D80V7
LC1D956BD
LC1D956F7
LC1D956K7
LC1D956M7
LC1D956P7
LC1D95B5
LC1D95B7
LC1D95BD
LC1D95BW
LC1D95D7
LC1D95E5
LC1D95E7
LC1D95ED
LC1D95F5
LC1D95F7
LC1D95FD
LC1D95FE7
LC1D95G7
LC1D95K7
LC1D95M5
LC1D95M7
LC1D95MD
LC1D95MW
LC1D95N7
LC1D95P5
LC1D95P7
LC1D95Q5
LC1D95Q7
LC1D95R7
LC1D95S5
LC1D95SD
LC1D95U5
LC1D95U7
LC1D95U7C
LC1D95V7
LC1DFKB7
LC1DFKF7
LC1DFKM7
LC1DFKP7
LC1DFKU7
LC1DFKV7
LC1DGKF7
LC1DGKM7
LC1DGKP7
LC1DGKU7
LC1DLKM7
LC1DLKP7
LC1DLKQ7
LC1DMK11F7C
LC1DMKB7
LC1DMKF7
LC1DMKG7
LC1DMKM7
LC1DMKN7
LC1DMKP7
LC1DMKU7
LC1DMKV7
LC1DPK12Q7C
LC1DPKB7C
LC1DPKF7
LC1DPKM7
LC1DPKP7
LC1DPKU7
LC1DPKV7
LC1DT203B7
LC1DT203FL
LC1DT206BD
LC1DT206BL
LC1DT206M7
LC1DT20B7
LC1DT20BD
LC1DT20BL
LC1DT20CD
LC1DT20E7
LC1DT20F7
LC1DT20FD
LC1DT20FE7
LC1DT20G7
LC1DT20GD
LC1DT20M7
LC1DT20MD
LC1DT20ML
LC1DT20N7
LC1DT20ND
LC1DT20P7
LC1DT20U7
LC1DT20UD
LC1DT253BD
LC1DT253BL
LC1DT253E7
LC1DT256BD
LC1DT256BL
LC1DT256FD
LC1DT256M7
LC1DT256P7
LC1DT25B7
LC1DT25BD
LC1DT25BL
LC1DT25CD
LC1DT25E7
LC1DT25ED
LC1DT25F7
LC1DT25FD
LC1DT25G7
LC1DT25GD
LC1DT25JD
LC1DT25LE7
LC1DT25M7
LC1DT25MD
LC1DT25P7
LC1DT25U7
LC1DT323BD
LC1DT326B7
LC1DT326BD
LC1DT326BL
LC1DT326G7
LC1DT326K7
LC1DT326L7
LC1DT326M7
LC1DT32B7
LC1DT32BD
LC1DT32BL
LC1DT32E7
LC1DT32ED
LC1DT32F7
LC1DT32G7
LC1DT32M7
LC1DT32MD
LC1DT32P7
LC1DT32U7
LC1DT403BL
LC1DT403E7
LC1DT406BD
LC1DT406BL
LC1DT406GD
LC1DT406K7
LC1DT406M7
LC1DT40B7
LC1DT40BD
LC1DT40BL
LC1DT40D7
LC1DT40E7
LC1DT40ED
LC1DT40F7
LC1DT40FD
LC1DT40FE7
LC1DT40G7
LC1DT40GD
LC1DT40JD
LC1DT40JL
LC1DT40LE7
LC1DT40M7
LC1DT40MD
LC1DT40ND
LC1DT40P7
LC1DT40SD
LC1DT40U7
LC1DT40V7
LC1DT60A3BD
LC1DT60A3E7
LC1DT60A3P7
LC1DT60A6BBE
LC1DT60A6BNE
LC1DT60A6ED
LC1DT60A6EHE
LC1DT60A6F7
LC1DT60A6GD
LC1DT60A6KUE
LC1DT60A6MD
LC1DT60A6SD
LC1DT60AB7
LC1DT60ABBE
LC1DT60ABD
LC1DT60ABNE
LC1DT60ACD
LC1DT60AD7
LC1DT60AE7
LC1DT60AEHE
LC1DT60AF7
LC1DT60AFD
LC1DT60AFE7
LC1DT60AG7
LC1DT60AK7
LC1DT60AKUE
LC1DT60AM7
LC1DT60AMD
LC1DT60AND
LC1DT60AP7
LC1DT60AU7
LC1DT60AV7
LC1DT60AW7
LC1DT80A3BD
LC1DT80A3P7
LC1DT80A6BBE
LC1DT80A6BD
LC1DT80A6BNE
LC1DT80A6ED
LC1DT80A6EHE
LC1DT80A6FD
LC1DT80A6KUE
LC1DT80A6MD
LC1DT80AB7
LC1DT80ABBE
LC1DT80ABD
LC1DT80ABNE
LC1DT80AC7
LC1DT80ACD
LC1DT80AE7
LC1DT80AEHE
LC1DT80AF7
LC1DT80AFD
LC1DT80AFE7
LC1DT80AG7
LC1DT80AJD
LC1DT80AKUE
LC1DT80ALE7
LC1DT80AM7
LC1DT80AN7
LC1DT80AND
LC1DT80AP7
LC1DT80AQ7
LC1DT80AU7
LC1DTKF7
LC1DTKM7
LC1DTKP7
LC1DTKQ7C
LC1DWK12F7
LC1DWK12G7
LC1DWK12M5
LC1DWK12M7
LC1DWK12N7
LC1DWK12P5
LC1DWK12P7
LC1DWK12Q7
LC1DWK12U7
LC1DWK12V7
LC1DWKB7C
LC1K06013FE7
LC1K06013P7
LC1K06015B7
LC1K06015F7
LC1K06015M7
LC1K06017P7
LC1K0601B5
LC1K0601B7
LC1K0601D5
LC1K0601D7
LC1K0601E5
LC1K0601E7
LC1K0601F7
LC1K0601F72
LC1K0601G7
LC1K0601M7
LC1K0601N7
LC1K0601P5
LC1K0601P7
LC1K0601P72
LC1K0601Q7
LC1K0601U7
LC1K06103B7
LC1K06103F7
LC1K06103FE7
LC1K06103P7
LC1K06103P72
LC1K06105B7
LC1K06105F7
LC1K06105M7
LC1K06105P7
LC1K06106K7
LC1K06107P7
LC1K0610B5
LC1K0610B7
LC1K0610B72
LC1K0610D5
LC1K0610D7
LC1K0610E5
LC1K0610E7
LC1K0610F7
LC1K0610F72
LC1K0610FE7
LC1K0610G7
LC1K0610K7
LC1K0610L7
LC1K0610M7
LC1K0610M72
LC1K0610N7
LC1K0610P5
LC1K0610P7
LC1K0610P72
LC1K0610Q7
LC1K0610T7
LC1K0610U7
LC1K0610V7
LC1K090043E7
LC1K090045E7
LC1K09004B7
LC1K09004B72
LC1K09004E7
LC1K09004F7
LC1K09004FE7
LC1K09004M7
LC1K09004M72
LC1K09004P7
LC1K09004Q7
LC1K09004U7
LC1K090083E7
LC1K090083P7
LC1K090085E7
LC1K090085F7
LC1K090085P7
LC1K090087P7
LC1K090087S7
LC1K09008B7
LC1K09008D7
LC1K09008E7
LC1K09008F7
LC1K09008G7
LC1K09008K7
LC1K09008M7
LC1K09008M72
LC1K09008N7
LC1K09008P7
LC1K09008S7

This document is current. Click on the product reference to get the most recent availability status (hyperlink to **se.com** product datasheet).
If your product variant is no longer available, please consult your distributor or regional sales office.

Product references

LC1K09008U7
LC1K09008V7
LC1K09008W7
LC1K09008Y7
LC1K09013B7
LC1K09013P7
LC1K09015B7
LC1K09015FE7
LC1K09015M7
LC1K09016K7
LC1K09017B7
LC1K09017E7
LC1K0901B5
LC1K0901B7
LC1K0901B72
LC1K0901C7
LC1K0901D5
LC1K0901D7
LC1K0901E5
LC1K0901E7
LC1K0901F7
LC1K0901F72
LC1K0901G7
LC1K0901M7
LC1K0901N7
LC1K0901P5
LC1K0901P7
LC1K0901P72
LC1K0901Q7
LC1K0901T7
LC1K0901U7
LC1K0901V7
LC1K09103B7
LC1K09103M7
LC1K09105D7
LC1K09105E7
LC1K09105F7
LC1K09105P7
LC1K09107E7
LC1K09107F7
LC1K0910B5
LC1K0910B7
LC1K0910D5
LC1K0910E5
LC1K0910E7
LC1K0910F7
LC1K0910F72
LC1K0910G7
LC1K0910K7
LC1K0910L7
LC1K0910M7
LC1K0910M72
LC1K0910N7
LC1K0910P5
LC1K0910P7
LC1K0910P72
LC1K0910Q7
LC1K0910R7
LC1K0910S7
LC1K0910SC7
LC1K0910T7
LC1K0910U7
LC1K0910V7
LC1K12004B7
LC1K12004M7
LC1K12004P7
LC1K12004T7
LC1K120085E7
LC1K12008B7S17
LC1K12008E7S17
LC1K12008F7S17
LC1K12013F7
LC1K12015P7
LC1K1201B5
LC1K1201B7
LC1K1201D5
LC1K1201D7
LC1K1201E5
LC1K1201E7
LC1K1201F7
LC1K1201M7
LC1K1201N7
LC1K1201P5
LC1K1201P7
LC1K1201U7
LC1K1201V7
LC1K12103M7
LC1K12103P7
LC1K12105B7
LC1K12105M7
LC1K12105P7
LC1K1210B5
LC1K1210B7
LC1K1210D5
LC1K1210D72
LC1K1210E5
LC1K1210E7
LC1K1210F7
LC1K1210F72
LC1K1210FE7
LC1K1210G7
LC1K1210M7
LC1K1210P5
LC1K1210P7
LC1K1210P72
LC1K1210Q7
LC1K1210T7
LC1K1210U7
LC1K1210V7
LC1K16004F7
LC1K16015P7
LC1K1601B5
LC1K1601B7
LC1K1601D5
LC1K1601E5
LC1K1601E7
LC1K1601F7
LC1K1601M7
LC1K1601P5
LC1K1601P7
LC1K1601Q7
LC1K1601V7
LC1K16106M7
LC1K1610B5
LC1K1610B7
LC1K1610D5
LC1K1610D7
LC1K1610E5
LC1K1610F7
LC1K1610K7
LC1K1610M7
LC1K1610P5
LC1K1610P7
LC1K1610Q7
LC1K1610U7
LC1K1610V7
LC1SK0600B7
LC1SK0600E7
LC1SK0600F7
LC1SK0600M7
LC1SK0600P7
LC1SK0600U7
LC1SK0600V7
LC1SKGC200B7
LC1SKGC200E7
LC1SKGC200F7
LC1SKGC200M7
LC1SKGC200P7
LC1SKGC200U7
LC1SKGC200V7
LC1SKGC301P7
LC1SKGC310E7
LC1SKGC310M7
LC1SKGC310P7
LC1SKGC400P7
LC2D093BD
LC2D093BL
LC2D096BD
LC2D096BL
LC2D096FD
LC2D099B7
LC2D09B7
LC2D09B7V
LC2D09BD
LC2D09BDV
LC2D09BL
LC2D09BLV
LC2D09BNE
LC2D09E7
LC2D09ED
LC2D09EHE
LC2D09F7
LC2D09FE7
LC2D09G7
LC2D09G7V
LC2D09JL
LC2D09K7
LC2D09KUE
LC2D09M7
LC2D09ND
LC2D09P7
LC2D09Q7
LC2D09U7
LC2D09U7V
LC2D09V7
LC2D115004M5
LC2D115004M7
LC2D115004P5
LC2D115004P7
LC2D1156F7
LC2D1156M7
LC2D115B7
LC2D115BD
LC2D115E7
LC2D115F7
LC2D115FE7
LC2D115G7
LC2D115M5
LC2D115M7
LC2D115P7
LC2D123BD
LC2D123BL
LC2D126L7
LC2D129B7
LC2D12B7
LC2D12BD
LC2D12BDV
LC2D12BL
LC2D12BLV
LC2D12BNE
LC2D12D7
LC2D12E7
LC2D12ED
LC2D12EHE
LC2D12F7
LC2D12FD
LC2D12FE7
LC2D12G7
LC2D12G7V
LC2D12KUE
LC2D12M7
LC2D12P7
LC2D12Q7
LC2D12R7
LC2D150B7
LC2D150BD
LC2D150E7
LC2D150F7
LC2D150G7
LC2D150M7
LC2D150P7
LC2D150Q7
LC2D183BD
LC2D18B7
LC2D18B7V
LC2D18BD
LC2D18BDV
LC2D18BL
LC2D18BNE
LC2D18D7
LC2D18E7
LC2D18ED
LC2D18EHE
LC2D18F7
LC2D18FE7
LC2D18G7
LC2D18G7V
LC2D18JD
LC2D18KUE
LC2D18L7
LC2D18M7
LC2D18P7
LC2D18Q7
LC2D18V7
LC2D256BL
LC2D25B7
LC2D25B7V
LC2D25BD
LC2D25BL
LC2D25BNE
LC2D25D7
LC2D25E7
LC2D25ED
LC2D25EHE
LC2D25F7
LC2D25FE7
LC2D25G7
LC2D25G7V
LC2D25K7
LC2D25KUE
LC2D25M7
LC2D25P7
LC2D25P7V
LC2D25U7
LC2D25X7
LC2D323BD
LC2D32B7
LC2D32BD
LC2D32BDV
LC2D32BL
LC2D32BNE
LC2D32D7
LC2D32E7
LC2D32EHE
LC2D32F7
LC2D32FE7
LC2D32G7
LC2D32G7V
LC2D32KUE
LC2D32M7
LC2D32P7
LC2D32P7V
LC2D32Q7
LC2D32V7
LC2D386BL
LC2D38B7
LC2D38BD
LC2D38BL
LC2D38E7
LC2D38EHE
LC2D38F7
LC2D38KUE
LC2D38P7
LC2D40A3FE7
LC2D40AB7
LC2D40ABBE
LC2D40ABD
LC2D40ABNE
LC2D40AE7
LC2D40AEHE
LC2D40AF7
LC2D40AFE7
LC2D40AG7
LC2D40AJD
LC2D40AKUE
LC2D40AM7
LC2D40AP7
LC2D40AV7
LC2D40F7
LC2D50AB7
LC2D50ABBE
LC2D50ABD
LC2D50ABNE
LC2D50AE7
LC2D50AED
LC2D50AEHE
LC2D50AF7
LC2D50AFD
LC2D50AFE7
LC2D50AG7
LC2D50AK7
LC2D50AKUE
LC2D50AL7
LC2D50AM7
LC2D50AND
LC2D50AP7
LC2D50G7
LC2D65AB7
LC2D65ABBE
LC2D65ABD
LC2D65ABNE
LC2D65AE7
LC2D65AED
LC2D65AEHE
LC2D65AF7
LC2D65AFE7
LC2D65AG7
LC2D65AKUE
LC2D65AL7
LC2D65AM7
LC2D65AP7
LC2D65AU7
LC2D65F7
LC2D65G7
LC2D80004M5
LC2D80004M7
LC2D80004P5
LC2D80004P7
LC2D80ABBE
LC2D80ABNE
LC2D80AEHE
LC2D80AKUE
LC2D80B7
LC2D80E7
LC2D80F5
LC2D80F7
LC2D80FE7
LC2D80G7
LC2D80K7
LC2D80M7
LC2D80P7
LC2D95B7
LC2D95E7
LC2D95F7
LC2D95M7
LC2D95P7
LC2DT20P7
LC2DT25BD
LC2DT25E7
LC2DT25G7
LC2DT25P7
LC2DT32BD
LC2DT32E7
LC2DT32F7
LC2DT32G7
LC2DT32P7
LC2DT32U7
LC2DT403E7
LC2DT40BD
LC2DT40E7
LC2DT40F7
LC2DT40G7
LC2DT40GD
LC2DT40M7
LC2DT40P7
LC2K06015B7
LC2K06015M7
LC2K0601B7
LC2K0601B72
LC2K0601E7
LC2K0601F7
LC2K0601FE7
LC2K0601G7
LC2K0601K7
LC2K0601M7
LC2K0601P7
LC2K0601P72
LC2K0601U7
LC2K06103P7
LC2K06105B7
LC2K06105M7
LC2K0610B7
LC2K0610D72
LC2K0610E7
LC2K0610F7
LC2K0610FE7
LC2K0610M7
LC2K0610P7
LC2K0610P72
LC2K0610U7
LC2K0610V7
LC2K09004B7
LC2K09004E7
LC2K09004F7
LC2K09004G7
LC2K09004M7

This document is current. Click on the product reference to get the most recent availability status (hyperlink to **se.com** product datasheet). If your product variant is no longer available, please consult your distributor or regional sales office.

Product references

LC2K09013P7
LC2K09015D7
LC2K09015E7
LC2K09015F7
LC2K09015P7
LC2K0901B7
LC2K0901D7
LC2K0901E7
LC2K0901F7
LC2K0901F72
LC2K0901G7
LC2K0901M7
LC2K0901P7
LC2K0901U7
LC2K0901V7
LC2K09103B7
LC2K09103E7
LC2K09105B7
LC2K09105E7
LC2K09105M7
LC2K09107B7
LC2K0910B7
LC2K0910D7
LC2K0910D72
LC2K0910E7
LC2K0910F7
LC2K0910M7
LC2K0910P7
LC2K0910U7
LC2K12004F7
LC2K1201B7
LC2K1201B72
LC2K1201E7
LC2K1201F7
LC2K1201G7
LC2K1201M7
LC2K1201P7
LC2K1201U7
LC2K12105B7
LC2K12105F7
LC2K12107B7
LC2K1210B7
LC2K1210D7
LC2K1210E7
LC2K1210F7
LC2K1210G7
LC2K1210K7
LC2K1210L7
LC2K1210M7
LC2K1210P7
LC2K1601K7
LC2K1610B7
LC2K1610F7
LC2K1610P7
LC3D115F7A64
LC3D115M7A64
LC3D115P7
LC3D115P7A64
LC3D150M7A64
LC3D150P7
LC3D150P7A64
LC3D180AB7
LC3D18AB7
LC3D18AF7
LC3D18AU7
LC3D320AG7
LC3D320AP7
LC3D32AB7
LC3D32AF7
LC3D32AP7
LC3D80B7
LC3D80B7A64
LC3D80E7A64
LC3D80F7
LC3D80F7A64
LC3D80M7
LC3D80P7
LC3D80P7A64
LC3D80U7A64
LC3K09P7
LC7K0601M7
LC7K0610M7
LC7K09004B7
LC7K09004M7
LC7K09015M7
LC7K0901M7
LC7K0910B7
LC7K0910M7
LC7K1201E7
LC7K1201F7
LC7K1201M7
LC7K1210F7
LP1D400086SW
LP1D40008BD
LP1D40008ED
LP1D40008FD
LP1D40008GD
LP1D40008MD
LP1D40008MW
LP1D40008ND
LP1D65008BD
LP1D65008FD
LP1D800046SW
LP1D80004BD
LP1D80004BW
LP1D80004ED
LP1D80004FD
LP1D800086SW
LP1D80008BD
LP1D80008BW
LP1D80008ED
LP1D80008FD
LP1D80008MD
LP1D80008MW
LP1K06013BD
LP1K06013BD3
LP1K06013MD3
LP1K06015BD
LP1K06016BD
LP1K0601BD
LP1K0601BD3
LP1K0601ED
LP1K0601FD
LP1K0601MD
LP1K0601ND
LP1K0601SD
LP1K06103BD
LP1K06103BD3
LP1K06103ED
LP1K06105BD
LP1K06106BD
LP1K0610BD
LP1K0610BD3
LP1K0610ED
LP1K0610FD
LP1K0610FD3
LP1K0610JD
LP1K0610MD
LP1K0610MPD
LP1K090043BD
LP1K090045BD
LP1K090045ND
LP1K09004BD
LP1K09004BD3
LP1K09004ED
LP1K09004FD
LP1K09004GD
LP1K09004JD
LP1K09004MD
LP1K090085BD
LP1K090085MD
LP1K090085MDS35
LP1K09008BD
LP1K09008BD3
LP1K09008ED
LP1K09008FD
LP1K09008JD
LP1K09008MD
LP1K09008ND
LP1K09013BD
LP1K09013BD3
LP1K09015BD
LP1K09015UD
LP1K0901BD
LP1K0901BD3
LP1K0901ED
LP1K0901ED3
LP1K0901FD
LP1K0901GD
LP1K0901JD
LP1K0901MD
LP1K0901ND
LP1K0901SD3
LP1K09103BD
LP1K09103BD3
LP1K09105BD
LP1K09105BD3
LP1K0910BD
LP1K0910BD3
LP1K0910ED
LP1K0910ED3
LP1K0910FD
LP1K0910GD
LP1K0910JD
LP1K0910MD
LP1K0910SD
LP1K120043BD3
LP1K12004BD
LP1K12004FD
LP1K12004JD
LP1K12013BD3
LP1K12015BD
LP1K12015MD
LP1K12015MDS35
LP1K1201BD
LP1K1201BD3
LP1K1201ED
LP1K1201FD
LP1K1201MD
LP1K12103BD
LP1K12103BD3
LP1K12105BD
LP1K1210BD
LP1K1210BD3
LP1K1210ED
LP1K1210FD
LP1K1210JD
LP1K1210MD
LP1K1210SD3
LP1SK0600BD
LP1SK0600ED
LP1SK0600JD
LP2K06013BD
LP2K06015BD
LP2K06015BD3
LP2K0601BD
LP2K0601BD3
LP2K0601ED
LP2K0601JD
LP2K06103BD3
LP2K0610BD
LP2K0610BD3
LP2K0610JD
LP2K09004BD3
LP2K09013BD
LP2K09015BD
LP2K0901BD
LP2K0901BD3
LP2K0901ED
LP2K0901JD
LP2K0901ND
LP2K09105BD
LP2K0910BD
LP2K0910BD3
LP2K0910ED
LP2K1201BD
LP2K1201BD3
LP2K12105BD
LP2K1210BD
LP2K1210BD3
LP2K1210JD
LP4K06013BW3
LP4K06016BW3S16
LP4K0601BW3
LP4K0601SW3
LP4K06103BW3
LP4K06105BW3
LP4K0610BW3
LP4K0610EW3
LP4K0610FW3
LP4K09004BW3
LP4K090085BW3
LP4K090087BW3
LP4K09008BW3
LP4K09008EW3
LP4K09008SW3
LP4K09013BW3
LP4K09015BW3
LP4K0901BW3
LP4K0901FW3
LP4K09103BW3
LP4K09105BW3
LP4K09106BW3S16
LP4K09107BW3
LP4K0910BW3
LP4K0910FW3
LP4K0910JW3
LP4K12004BW3
LP4K12015BW3
LP4K12016BW3S16
LP4K1201BW3
LP4K1201EW3
LP4K12103BW3
LP4K12106BW3S16
LP4K1210BW3
LP4K1210SW3
LP5K06015BW3
LP5K0601BW3
LP5K0610BW3
LP5K09004BW3
LP5K09013BW3
LP5K0901BW3
LP5K0910BW3
LP5K12004BW3
LP5K12015BW3
LP5K1201BW3
LP5K1201SW3
LP5K1210BW3
LX1D6B5
LX1D6B6
LX1D6B7
LX1D6E7
LX1D6F5
LX1D6F7
LX1D6G7
LX1D6L6
LX1D6M5
LX1D6M6
LX1D6M7
LX1D6N7
LX1D6P7
LX1D6Q7
LX1D6R7
LX1D6T6
LX1D6U5
LX1D6U6
LX1D6U7
LX1D6V7
LX1D8B7
LX1D8E7
LX1D8F7
LX1D8FE7
LX1D8G7
LX1D8L7
LX1D8M5
LX1D8M7
LX1D8N7
LX1D8P7
LX1D8Q5
LX1D8Q7
LX1D8R7
LX1D8T7
LX1D8U7
LX1D8V7
LX4D2UD
LX4D7BD
LX4D7JD
LX4D8BD
LX4D8MD
LXD1B7
LXD1C7
LXD1D7
LXD1E7
LXD1F7
LXD1FE7
LXD1G7
LXD1J7
LXD1L7
LXD1LE7
LXD1M7
LXD1N7
LXD1P7
LXD1Q7
LXD1R7
LXD1S7
LXD1SC7
LXD1T7
LXD1U7
LXD1V7
LXD1W7
LXD1X7
LXD1Y7
LXD3B7
LXD3D7
LXD3E7
LXD3F7
LXD3FE7
LXD3G7
LXD3LE7
LXD3M7
LXD3N7
LXD3P7
LXD3Q7
LXD3R7
LXD3T7
LXD3U7
LXD3V7
LXD3X7

This document is current. Click on the product reference to get the most recent availability status (hyperlink to **se.com** product datasheet). If your product variant is no longer available, please consult your distributor or regional sales office.

TeSys SK, K, SKGC, Deca, Modular Contactors

Technical Data for Designers

Contents

TeSys SK Contactors:
> characteristics.....B8/62 to B8/65
> dimensions..... B8/66

TeSys SKGC Contactors:
> characteristics.....B8/67 to B8/70
> dimensions.....B8/71

TeSys K Contactors:
> characteristics.....B8/72 to B8/75
> dimensions.....B8/76 to B8/79

Deca green, Deca contactors:
> characteristics.....B8/80 to B8/93
> dimensions.....B8/94 to B8/107

Modular Contactors:
> characteristics.....B8/108 to B8/110
> dimensions.....B8/115 and B8/116

Modular Dual tariff contactors:
> characteristics.....B8/118 to B8/120
> dimensions.....B8/121 and B8/122

Modular Impulse relay:
> characteristics.....B8/123 to B8/126
> dimensions.....B8/127

Standard IEC tests - Contactors conforming to UL/CSA.....B8/128

Characteristics

Environment

Rated insulation voltage (Ui)	Conforming to 60947	**V**	690
Conforming to standards			IEC/EN 60947-4-1, UL 60947-4-1, CSA C22.2 n° 60947-4-1
Approvals			cULus, EAC, UKCA, CB certification
Degree of protection	Conforming to IEC 60529		Protection against direct finger contact IP2x
Ambient air temperature around the device	Storage	**°C**	-50…+70
	Operation	**°C**	-20…+50
Maximum operating altitude	Without derating	**m**	2000
Operating position			**Vertical axis** **Horizontal axis** 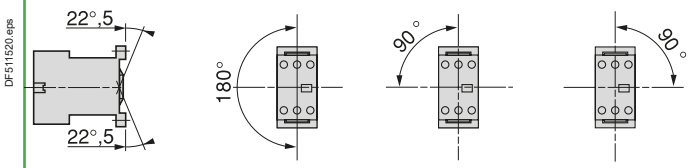 Without derating Without derating

Cabling, screw clamp terminals			Min	Max
	Solid conductor	**mm²**	1 x 1.5 or 2 x 1.5	1 x 6 or 2 x 4
	Flexible cable without cable end	**mm²**	1 x 0.5 or 2 x 0.35	1 x 6 or 2 x 2.5
	Flexible cable with cable end	**mm²**	1 x 0.35 or 2 x 0.35	1 x 6 or 2 x 1.5
Tightening torque	Pozidriv n° 1 head	**N.m**	0.8	
Terminal referencing			Conforming to standards En 50005	

Ref.
Contactors

Characteristics

Pole characteristics

Conventional thermal current (Ith)	For ambient temperature ⩽ 55 °C	**A**	12
Rated operational frequency		**Hz**	50/60
Frequency limits of the operational current		**Hz**	Up to 400
Rated operational voltage (Ue)		**V**	690
Rated making capacity	I rms conforming to IEC 60947-1	**A**	66
Rated breaking capacity (for Ue ⩽ 400 V)	Conforming to IEC 60947-1	**A**	52
Short time rating	In free air for a time "t" from cold state (θ ⩽ 55 °C)	**A**	50
Short-circuit protection	gl fuse U ⩽ 440 V	**A**	16
Average impedance per pole	At Ith and 50 Hz	**mΩ**	4
Maximum rated operational current			
For a temperature ⩽ 55 °C	AC-3 (1) (Ue ⩽ 400 V)	**A**	6
	AC-1	**A**	12
Utilisation in category AC-1 resistive circuits, heating, lighting (Ue ⩽ 440 V)	Increase in operational current by paralleling of poles	**A**	20

Auxiliary contact characteristics of add-on blocks

Rated operational voltage (Ue)	Up to	**V**	690
Rated insulation voltage (Ui)	Conforming to IEC 60947, IEC 60947-1	**V**	690
Conventional thermal current (Ith)	For ambiant temperature ⩽ 55 °C	**A**	10
Frequency of operational current		**Hz**	Up to 400
Short-circuit protection	Conforming to IEC 60947 and IEC 60947-1, gl fuse	**A**	10

Operational power of contacts conforming to IEC 60947

a.c. supply, category AC-15

Electrical durability (valid up to 3600 operating cycles per hour) on an inductive load such as the coil of an electromagnet: making current (cos φ 0.7) = 10 times the breaking current (cos φ 0.4).

	V	**24**	**48**	**110/ 127**	**220/ 230**	**380/ 400**	**440**
1 million operating cycles	**VA**	48	96	240	440	800	880
3 million operating cycles	**VA**	17	34	86	158	288	317
10 million operating cycles	**VA**	7	14	36	66	120	132
Occasional making capacity	**VA**	1000	2050	5000	10000	14000	13000

d.c. supply, category DC-13

Electrical durability (valid up to 1200 operating cycles per hour) on an inductive load such as the coil of an electromagnet, without economy resistor, the time constant increasing with the load.

	V	**24**	**48**	**110**	**220**	**440**	**440**
1 million operating cycles	**W**	120	80	60	52	51	880
3 million operating cycles	**W**	55	38	30	28	26	317
10 million operating cycles	**W**	15	11	9	8	7	132
Occasional making capacity	**W**	720	600	400	300	230	13000

(1) For LC1 contactors.

References: pages B8/2 and B8/3
Curves: page B8/69
Dimensions: page B8/70
Schemes: page B8/70

Characteristics

Control circuit characteristics

Type			LC1SK06	LP1SK06
Rated control circuit voltage (Uc)		**V**	∼ 24…400	⎓ 12…72
Control voltage limits (q ≤ 50 °C)	For operation		0.85…1.1 Uc	0.85…1.1 Uc
	For drop-out		≥ 0.20 Uc	≥ 0.10 Uc
Average coil consumption at 20 °C and at Uc	Inrush		16 VA	2.2 W
	Sealed		4.2 VA	2.2 W
Heat dissipation		**W**	1.4	2.2
Operating time at 20 °C and at Uc				
Between coil energisation and	opening of the N/C contacts	**ms**	8…16	10…18
	closing of the N/O contacts	**ms**	7…14	8…12
Between coil de-energisation and	opening of the N/O contacts	**ms**	6…8	4…6
	closing of the N/C contacts	**ms**	8…10	6…8
Maximum operating rate	In operating cycles per hour		1200	1200
Mechanical durability at Uc In millions of operating cycles	50/60 Hz coil		10	–
	⎓ coil		–	10

Ref.
Contactors

Durability curves

Use in category AC-3 (Ue ⩽ 440 V)

Control of 3-phase asynchronous squirrel cage motors with breaking whilst running.
The current broken (Ic) in category AC-3 is equal to the rated operational current (Ie) of the motor.

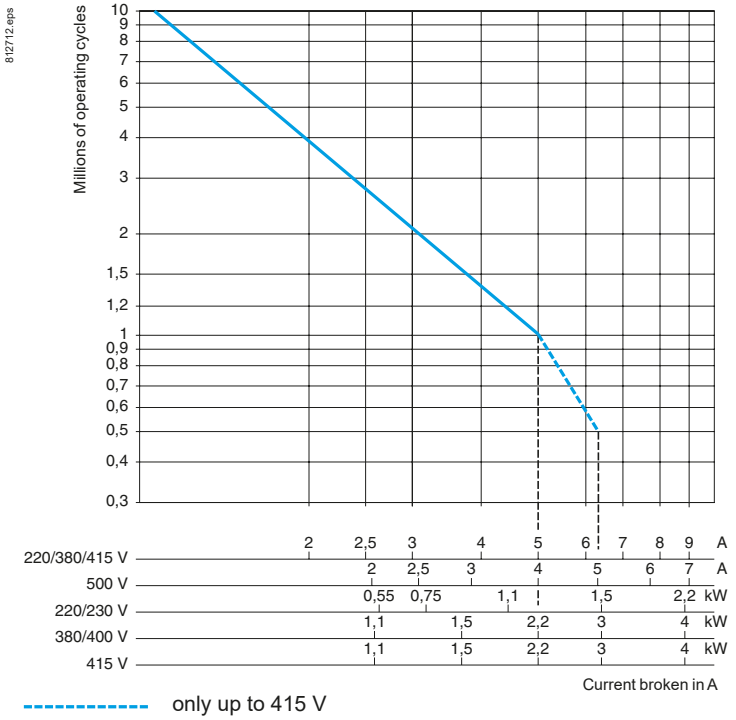

Use in category AC-1 (Ue ⩽ 440 V)

Control of resistive circuits (cos φ ⩾ 0.95).
The current broken (Ic) in category AC-1 is equal to the current (Ie) normally drawn by the load.

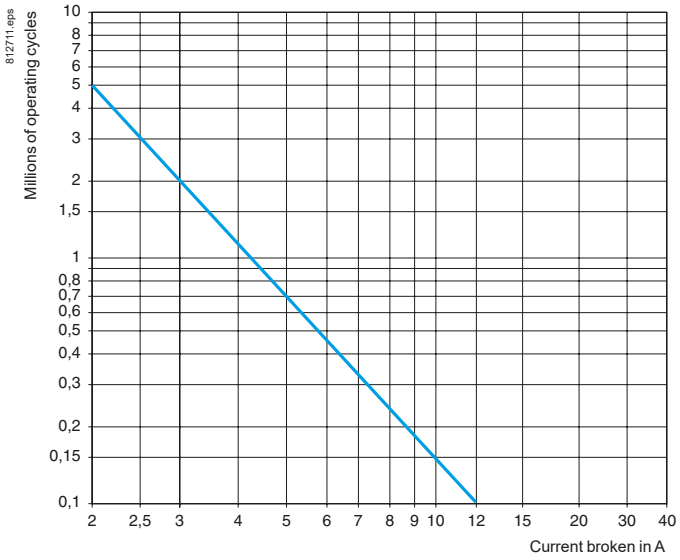

Ref.
Contactors

Dimensions, mounting and schemes

Dimensions

Mini-contactors

LC1 and LP1SK06

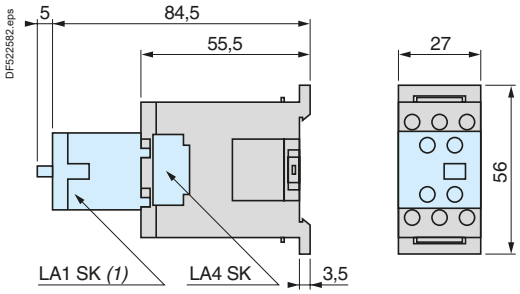

*(1) Only on **LC1SK06**.*

Mounting

Mini-contactors

LC1 and LP1SK06

On mounting rail NSYSDR200BD or NSYSDR200 (ـــ 35 mm)

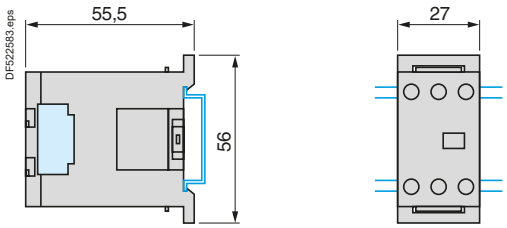

Schemes

2-pole mini-contactors

LC1 and LP1SK06

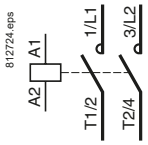

Add-on power pole block

1 pole + 1 "N/C" aux.

LA1SK01

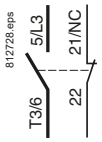

Instantaneous auxiliary contacts

2 "N/O"	2 "N/C"	1 "N/O" + 1 "N/C"
LA1SK20	**LA1SK02**	**LA1SK11**

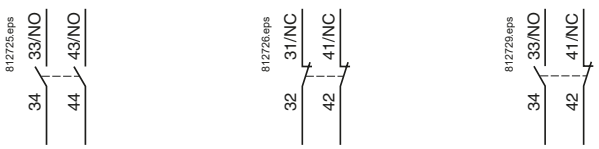

Ref.
Contactors

Characteristics

Environment

Rated insulation voltage (Ui)	Conforming to IEC 60947	**V**	690
Conforming to standards			IEC 60947, UL 60947-4-1, CSA C22.2 n° 60947-4-1
Approvals			cULus, UKCA
Degree of protection	Conforming to IEC 60529		Protection against direct finger contact
Ambient air temperature around the device			
	Storage	**°C**	-50…+70
	Operation	**°C**	-20…+50
Maximum operating altitude	Without derating	**m**	2000
Operating position			**Vertical axis** **Horizontal axis**

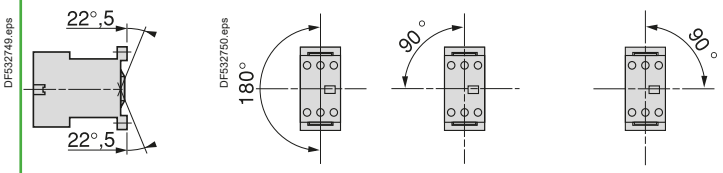

Without derating Without derating

Cabling, connectors			Min.	Max.
	Solid conductor	**mm²**	1 x 1.5 or 2 x 1.5	1 x 6 or 2 x 4
	Flexible cable without cable end	**mm²**	1 x 0.5 or 2 x 0.35	1 x 6 or 2 x 2.5
	Flexible cable with cable end	**mm²**	1 x 0.35 or 2 x 0.35	1 x 6 or 2 x 1.5
Tightening torque	Pozidriv n° 1 head	**N.m**	0.8	
Terminal referencing			Conforming to standards EN 50005	

Ref.
Contactors

References:
page B8/3
Dimensions, schemes:
page B8/71

Pole characteristics

Mini-contactor type				LC1SKGC2	LC1SKGC3 and LC1SKGC4
Conventional thermal current (Ith)	For ambient temperature ≤ 55 °C		**A**	20	20
Rated operational frequency			**Hz**	50/60	
Frequency limit of the operational current			**Hz**	up to 400	
Rated operational voltage (Ue)			**V**	690	
Rated making capacity	I rms conforming to IEC 60947		**A**	50	85
Rated breaking capacity (for Ue ≤ 400 V)	Conforming to IEC 60947 (I rms)		**A**	40	68
Permissible short time rating	In free air for a time "t" from cold state (θ ≤ 55 °C)		**A**	40	60
Short-circuit protection	gl fuse U ≤ 440 V		**A**	20	20
Average impedance per pole	At Ith and 50 Hz		**mΩ**	4	4
Maximum rated operational current	For temperature ≤ 55 °C	AC-3 (Ue ≤ 400 V)	**A**	5	9
		AC-1	**A**	20	20
Use in category AC-1 resistive circuits, heating, lighting (Ue ≤ 440 V)	Increase in rated operational current by paralleling of 2 poles		**A**	32	32

Auxiliary contact characteristics of mini-contactors

Rated operational voltage (Ue)	Up to	**V**	690
Rated insulation voltage (Ui)	Conforming to IEC 60947	**V**	690
Conventional thermal current (Ith)	For ambient temperature ≤ 55 °C	**A**	10
Frequency of the operational current		**Hz**	Up to 400
Short-circuit protection	Conforming to IEC 60947, gl fuse	**A**	10

Operational power of contacts conforming to IEC 60947

a.c. supply, category AC-15

Electrical durability (valid for up to 3600 operating cycles/hour) on an inductive load such as the coil of an electromagnet: making current (cos φ 0.7) = 10 times the power broken (cos φ 0.4).

	V	24	48	110/127	220/230	380/400	440
1 million operating cycles	**VA**	48	96	240	440	800	880
3 million operating cycles	**VA**	17	34	86	158	288	317
10 million operating cycles	**VA**	7	14	36	66	120	132
Occasional making capacity	**VA**	1000	2050	5000	10000	14000	13000

d.c. supply, category DC-13

Electrical durability (valid for up to 1200 operating cycles/hour) on an inductive load such as the coil of an electromagnet, without economy resistor, the time constant increasing with the load.

	V	24	48	110	220	440	440
1 million operating cycles	**W**	120	80	60	52	51	880
3 million operating cycles	**W**	55	38	30	28	26	317
10 million operating cycles	**W**	15	11	9	8	7	132
Occasional making capacity	**W**	720	600	400	300	230	13000

Ref.
Contactors
References: page B8/3
Dimensions, schemes: page B8/71

Characteristics

Control circuit characteristics

Mini-contactor type			LC1SKGC2	LC1SKGC3 and LC1SKGC4
Rated control circuit voltage (Uc)		**V**	∿ 24…400	
Control voltage limits (θ ≤ 55 °C)	Operation		0.85…1.1 Uc	
	For drop-out		≥ 0.20 Uc	
Average coil consumption at 20 °C and at Uc				
	Inrush	**VA**	16	23
	Sealed	**VA**	4.2	4.9
Heat dissipation		**W**	1.4	1.5
Operating time at 20 °C and at Uc				
Between coil energisation and	opening of the N/C contacts	**ms**	8…16	
	closing of the N/O contacts	**ms**	7…14	
Between coil de-energisation and	opening of the N/O contacts	**ms**	6…8	
	closing of the N/C contacts	**ms**	8…10	
Maximum operating rate	In operating cycles per hour		1200	
Mechanical durability at Uc in millions of operating cycles	50/60 Hz coil		10	

References:
page B8/3

Dimensions, schemes:
page B8/71

Durability curves

Use in category AC-3 (Ue ⩽ 440 V)

Control of 3-phase asynchronous squirrel cage motors with breaking whilst running.
The current broken (Ic) in category AC-3 is equal to the rated operational current of the motor.

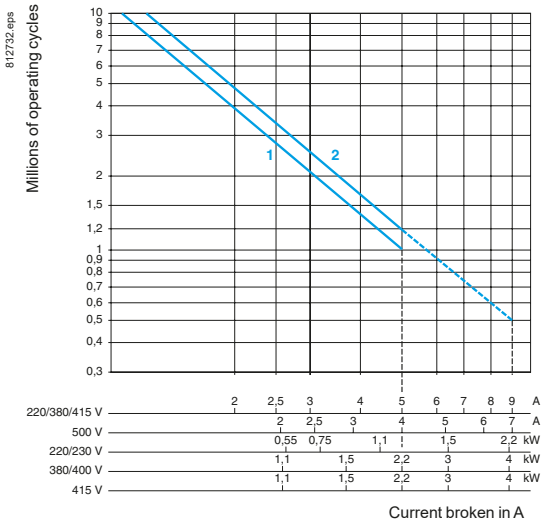

1. LC1SKGC2
2. LC1SKGC3 and SKGC4

----- only up to 415 V

Use in category AC-1 (Ue ⩽ 440 V)

Control of resistive circuits (cos φ ⩾ 0.95).
The current broken (Ic) in category AC-1 is equal to the current (Ie) normally drawn by the load.

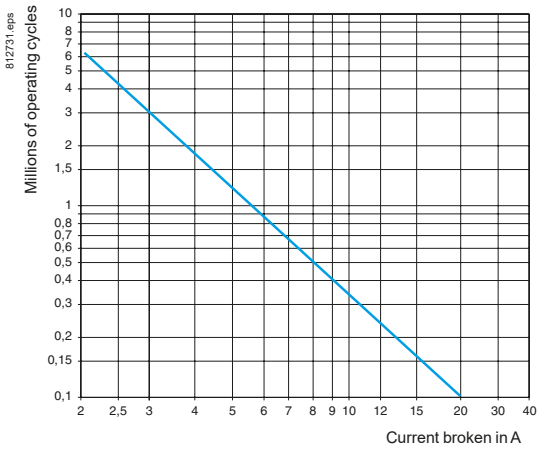

Ref.
Contactors

Dimensions, mounting and schemes

Dimensions — Mounting

Mini-contactors LC1SKGC2 — **On mounting rail NSYSDR200BD or NSYSDR200 (, 35 mm)**

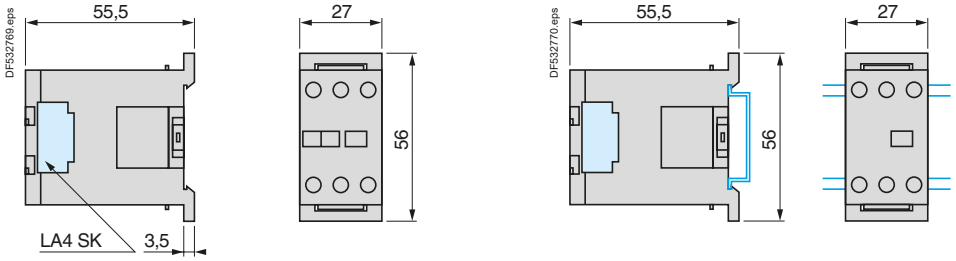

Dimensions — Mounting

Mini-contactors LC1SKGC3 and SKGC4 — **On panel** — **On mounting rail NSYSDR200BD or NSYSDR200 (, 35 mm)**

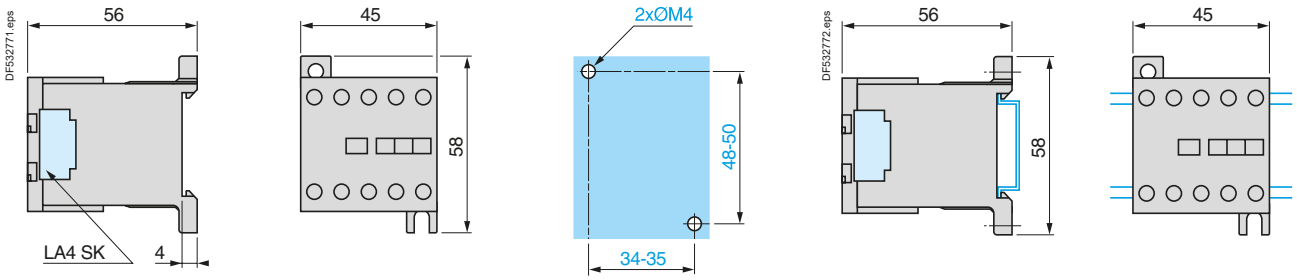

2-pole mini-contactors

LC1SKGC2

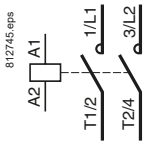

3-pole mini-contactors

LC1SKGC310 — **LC1SKGC301**



4-pole mini-contactors

LC1SKGC400

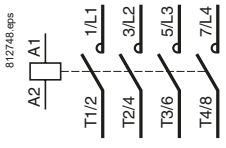

References: page B8/3
Characteristics: pages B8/67 to B8/69
Curves: page B8/70

Environment characteristics

Conforming to standards			IEC/EN 60947-4-1, IEC/EN 60947-5-1, UL 60947-4-1, CSA C22.2 n° 60947-4-1, UL 60947-5-1, CSA C22.2 n° 60947-5-1, GB/T 14048.4		
Product certifications	LC● and LP●K06 to K12		UL, CSA, CCC, EAC, UKCA, CB certification		
	LC● and LP●K16		UKCA, CB certification, CCC, EA		
Operating positions			Vertical axis 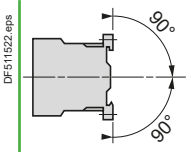 DF511522.eps 90° 90° *Without derating*	Horizontal axis 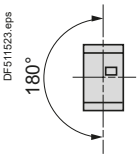 DF511523.eps 180° *Without derating*	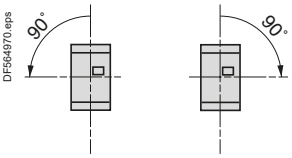 DF564970.eps 90° 90° *Possible positions for **LC●K** only. Contactor pull-in voltage: 0.85 Uc*
Connection			**Min.**	**Max.**	**Max. to IEC 60947**
Screw clamp terminals	Solid conductor	**mm²**	1 x 1.5	2 x 4	1 x 4 + 1 x 2.5
	Flexible conductor without cable end	**mm²**	1 x 0.75	2 x 4	2 x 2.5
	Flexible conductor with cable end	**mm²**	1 x 0.34	1 x 1.5 + 1 x 2.5	1 x 1.5 + 1 x 2.5
Spring terminals	Solid conductor	**mm²**	1 x 0.75	1 x 1.5	2 x 1.5
	Flexible conductor without cable end	**mm²**	1 x 0.75	1 x 1.5	2 x 1.5
Faston connectors	Clip	**mm**	2 x 2.8 or 1 x 6.35		
Solder pins for printed circuit board			With locating device between power and control circuits pins length 5 mm Recommended minimum width and thickness layer for power printed circuit board track : 4mm x 35 microns		
Tightening torque	of screw-clamp terminals only Philips head n° 2 and Ø6	**N.m**	0.8		
Terminal referencing	Conforming to standards EN 50005 and EN 50012		Up to 5 contacts, depending on model		
Rated insulation voltage (Ui)	Conforming to IEC 60947-4-1	**V**	690		
	Conforming to CSA 22-2 n° 60947-4-1, UL 60947-4-1	**V**	600		
Rated impulse withstand voltage (Uimp)		**kV**	8		
Degree of protection	Conforming to IEC 60529		Protection against direct finger contact IP2x		
Ambient air temperature around the device	Storage	**°C**	-50…+80		
	Operation	**°C**	-25…+50 in AC3, -25…+60 in AC1		
Maximum operating altitude	Without derating	**m**	2000		
Vibration resistance 5 ... 300 Hz Conforming to IEC/EN 60068-2-27	Contactor open		2 gn		
	Contactor closed		4 gn		
Flame resistance	according to IEC 60695-2-10	**°C**	850		
Shock resistance (1/2 sine wave, 11 ms) Conforming to IEC/EN 60068-2-6	Contactor open		On X axis: 6 gn On Y and Z axes: 10 gn		
	Contactor closed		On X axis: 10 gn On Y and Z axes: 15 gn		

Ref.
Contactors

References:
pages B8/4 to B8/11
Dimensions:
pages B8/76 and B8/78
Schemes:
pages B8/77 and B8/79

Characteristics

Pole characteristics

Type		LC● or LP●		K06	K09	K12	K16
Conventional thermal current (Ith)	For ambient temperature ≤ 60 °C		**A**	20 (1)			
Rated operational frequency			**Hz**	50/60			
Frequency limits of the operational current			**Hz**	Up to 400			
Rated operational voltage (Ue)			**V**	690			
Rated making capacity	I rms conforming to IEC 60947		**A**	110	110	144	160
Rated breaking capacity	I rms conforming to IEC 60947	220/230 V	**A**	110	110	–	–
		380/400 V	**A**	110	110	–	–
		415 V	**A**	110	110	–	–
		440 V	**A**	110	110	110	110
		500 V	**A**	80	80	80	80
		660/690 V	**A**	70	70	70	70
Permissible short time rating	In free air for a time "t" from cold state (θ ≤ 50 °C)	1 s	**A**	90	90	115	115
		5 s	**A**	85	85	105	105
		10 s	**A**	80	80	100	100
		30 s	**A**	60	60	75	75
		1 min	**A**	45	45	55	55
		3 min	**A**	40	40	50	50
		≥ 15 min	**A**	20	20	25	25
Short-circuit protection	gG fuse U ≤ 440 V (aM fuse, see page 22009/2)		**A**	25			
Average impedance per pole	At Ith and 50 Hz		**mΩ**	3			
Use in category AC-1 resistive circuits, heating, lighting (Ue ≤ 440 V)	Maximum rated operational current for a temperature ≤ 50 °C		**A**	20			
	Maximum rated operational current for a temperature ≤ 70 °C		**A**	16 for Ue only			
	Rated operational current limits in relation to the on-load factor and operating frequency			On-load factor		90 %	60 % 30 %
			A	300 operating cycles/hour		13	15 18
			A	120 operating cycles/hour		15	18 19
			A	30 operating cycles/hour		19	20 20
	Increase in rated operational current by paralleling of poles			Apply the following coefficients to the above currents; these coefficients take into account an often unbalanced distribution of current between the poles			
				2 poles in parallel: K = 1.60			
				3 poles in parallel: K = 2.25			
				4 poles in parallel: K = 2.80			
Use in category AC-3 squirrel cage motors	Operational power according to the voltage. Voltage 50 or 60 Hz	115 V single-ph.	**kW**	0.37	0.55	–	–
		220 V single-ph.	**kW**	0.75	1.1	–	–
		220/230 V 3-ph.	**kW**	1.5	2.2	3	4
		380/415 V 3-ph.	**kW**	2.2	4	5.5	7.5
		440/480 V 3-ph.	**kW**	3	4	5.5/4 (480)	5.5/4 (480)
		500/600 V 3-ph.	**kW**	3	4	4	4
		660/690 V 3-ph.	**kW**	3	4	4	4
	Maximum operating rate (in operating cycles/hour in relation to % of rated power)			Op. cycles/h		600	900 1200
				Power		100 %	75 % 50 %

*(1) For **LC●K●●●●3 / LP●K●●●●3** with spring terminal, Ith max = 10 A.*

References: pages B8/4 to B8/11
Dimensions: pages B8/76 and B8/78
Schemes: pages B8/77 and B8/79

Characteristics

Control circuit characteristics

Type			LC1	LC2	LC7	LC8	LP1	LP2	LP4	LP5
Rated control circuit voltage (Uc)		**V**	∼ 12…690 (1)		∼ 24…240 (1)		⎓ 12…250 (1)		⎓ 12…120	
Control voltage limits (≤ 50 °C) single voltage coil	Operation		0.8…1.15 Uc (2)		0.85…1.1 Uc		0.8…1.15 Uc		0.7…1.30 Uc	
	Drop-out		≥ 0.20 Uc		≥ 0.10 Uc		≥ 0.10 Uc		≥ 0.10 Uc	
Average consumption at 20 °C and at Uc	Inrush		30 VA		3 VA		3 W		1.8 W	
	Sealed		4.5 VA		3 VA		3 W		1.8 W	
Heat dissipation		**W**	1.3		3		3		1.8	
Operating time at 20 °C and at Uc										
Between coil energisation and:	- opening of the N/C contacts	**ms**	5…15		25…35		25…35		25…35	
	- closing of the N/O contacts	**ms**	10…20		30…40		30…40		30…40	
Between coil de-energisation and:	- opening of the N/O contacts	**ms**	10…20		30		10		10…20	
	- closing of the N/C contacts	**ms**	15…25		40		15		15…25	
Maximum immunity to microbreaks		**ms**	2		2		2		2	
Maximum operating rate	In operating cycles per hour		3600		3600		3600		3600	
Mechanical durability at Uc In millions of operating cycles	50/60 Hz coil		10	5	10	5	–	–	–	–
	⎓ coil		–	–	–	–	10	5	–	–
	Wide range coil, Low consumption		–	–	–	–	–	–	30	5

*(1) For mains supplies with a high level of interference (voltage surge > 800 V), use a suppressor module **LA4KE1FC** (50…129 V) or **LA4KE1UG** (130…250 V), see page B8/14.*

*(2) **LC1K12, LC1K16...** : 0.85…1.15 Uc.*

Ref.
Contactors

Characteristics and durability curves

Auxiliary contact characteristics of contactors and instantaneous contact blocks

Number of auxiliary contacts	On LC●K or LP●K 3-pole			1
	On LA1K			2 or 4
Rated operational voltage (Ue)	Up to		**V**	690
Rated insulation voltage (Ui)	Conforming to IEC 60947		**V**	690
	Conforming to UL 60947-5-1, CSA C22.2 n° 60947-5-1		**V**	600
Conventional thermal current (Ith)	For ambient temperature ≤ 50 °C		**A**	10
Frequency of the operational current			**Hz**	Up to 400
Minimum switching capacity	U min		**V**	17
	I min		**mA**	5
Short-circuit protection	Conforming to IEC 60947, gG fuse		**A**	10
Rated making capacity	Conforming to IEC 60947	I rms	**A**	110
Short-time rating	Permissible for	1 s	**A**	80
		500 ms	**A**	90
		100 ms	**A**	110
Insulation resistance			**MΩ**	> 10
Non-overlap distance	LA1K: linked contacts conforming to INRS, BIA and CNA specifications		**mm**	0.5 (see schemes pages B8/77 and B8/79)

Power broken in VA

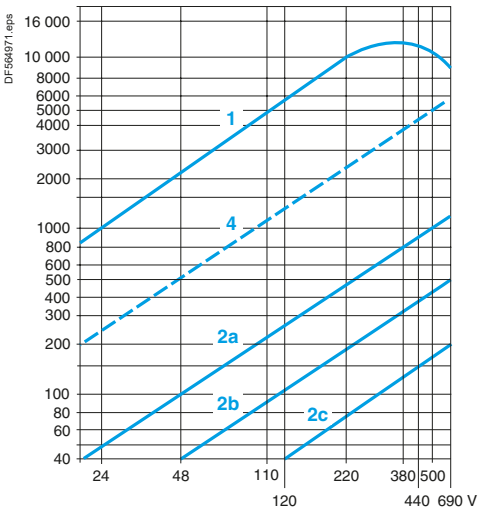

Power broken in W

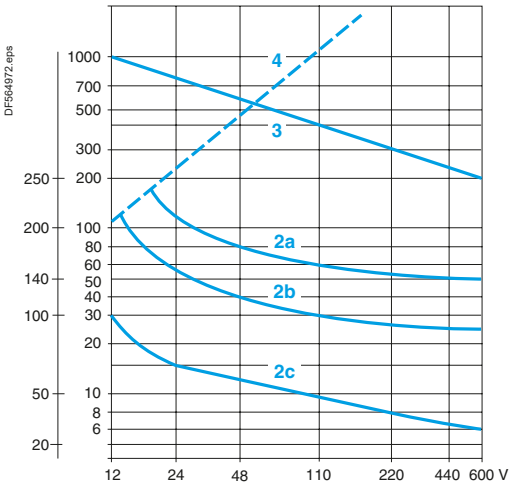

Operational power of contacts conforming to IEC 60947

a.c. supply, category AC-15

Electrical durability (valid for up to 3600 operating cycles/hour) on an inductive load such as the coil of an electromagnet: making current (cos φ 0.7) = 10 times the power broken (cos φ 0.4).

Operating cycles	V	24	48	110/ 127	220/ 230	380/ 400	440	600/ 690
1 million operating cycles	**VA**	48	96	240	440	800	880	1200
3 million operating cycles	**VA**	17	34	86	158	288	317	500
10 million operating cycles	**VA**	7	14	36	66	120	132	200
Occasional making capacity	**VA**	1000	2050	5000	10000	14000	13000	9000

d.c. supply, category DC-13

Electrical durability (valid for up to 1200 operating cycles/hour) on an inductive load such as the coil of an electromagnet, without economy resistor, the time constant increasing with the load.

Operating cycles	V	24	48	110	220	440	600
1 million operating cycles	**W**	120	80	60	52	51	50
3 million operating cycles	**W**	55	38	30	28	26	25
10 million operating cycles	**W**	15	11	9	8	7	6
Occasional making capacity	**W**	720	600	400	300	230	200

1. Breaking limit of contacts valid for:
   - maximum of 50 operating cycles at 10 s intervals (power broken = making current x cos φ 0.7).
2. Electrical durability of contacts for:
   - 1 million operating cycles (2a)
   - 3 million operating cycles (2b)
   - 10 million operating cycles (2c).
3. Breaking limit of contacts valid for:
   - maximum of 20 operating cycles at 10 s intervals with current passing for 0.5 s per operating cycle.
4. Thermal limit.

References:
pages B8/4 to B8/11

Dimensions:
pages B8/76 and B8/78

Schemes:
pages B8/77 and B8/79

Dimensions and mounting

Contactors

LC1K, LC7K, LP1K, LP4K

On panel

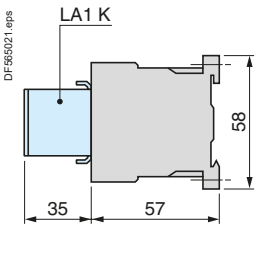

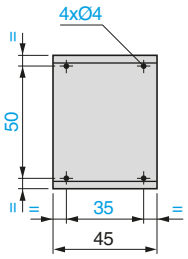

On mounting rail NSYSDR200BD or NSYSDR200 (⎓ 35 mm)

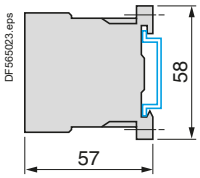

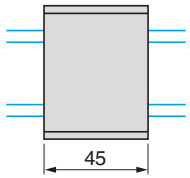

DX1AP25

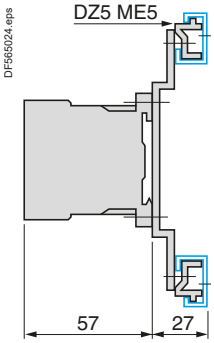

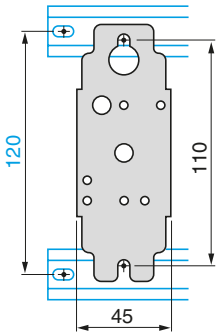

On printed circuit board

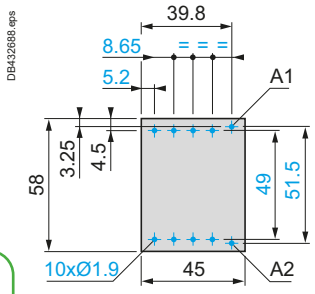

Electronic time delay contact blocks

LA2KT

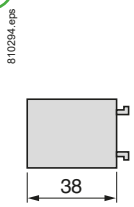

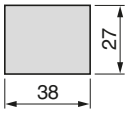

On contactor

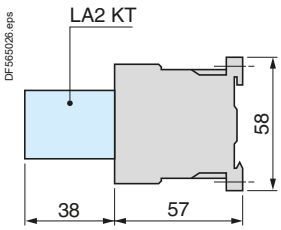

Suppressor modules

LA4K●

On contactor LC1K or LP1K

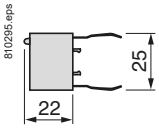



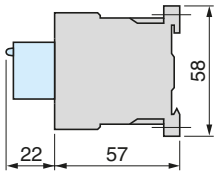

References:
pages B8/4 to B8/7

Characteristics:
pages B8/72 to B8/75

Schemes:
page B8/77

Life Is On Schneider Electric

Schemes

3-pole contactors

3 P + N/O

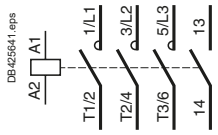

3 P + N/C

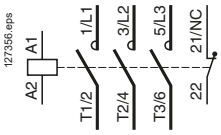

With integral suppression device

LC7K

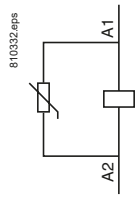

LP4K

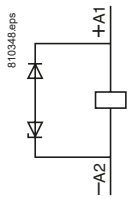

4-pole contactors

4 P

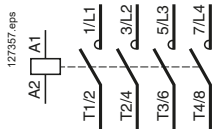

2 P N/O + 2 P N/C

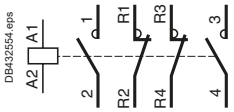

With integral suppression device

LC7K

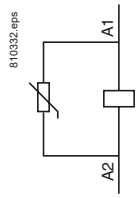

LP4K

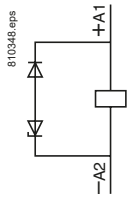

Instantaneous auxiliary contacts LA1K

LA1KN20, KN207, KN203

2 N/O

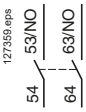

LA1KN02, KN027, KN023

2 N/C

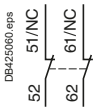

LA1KN11, KN117, KN113

1 N/O + 1 N/C



LA1KN40, KN407, KN403

4 N/O



LA1KN31, KN317, KN313

3 N/O + 1 N/C

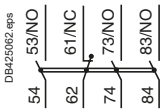

LA1KN22, KN227, KN223

2 N/O + 2 N/C

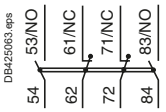

LA1KN13, KN137, KN133

1 N/O + 3 N/C

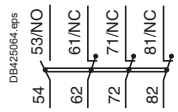

LA1KN04, KN047, KN043

4 N/C

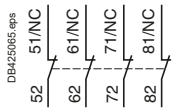

Terminal referencing conforming to standard EN 50012

LA1KN02M

2 N/C

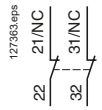

LA1KN11M

1 N/O + 1 N/C

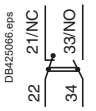

LA1KN31M

3 N/O + 1 N/C

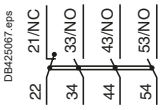

LA1KN22M

2 N/O + 2 N/C

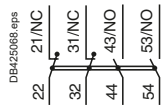

Electronic time delay contact blocks

LA2KT

1 C/O

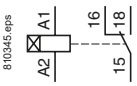

Suppressor modules

LA4KC

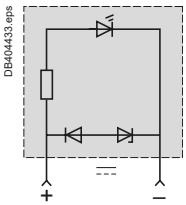

LA4KE

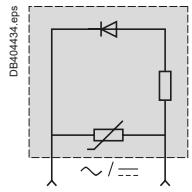

References:
pages B8/4 to B8/7

Characteristics:
pages B8/72 to B8/75

Dimensions:
page B8/76

Dimensions and mounting

Reversing contactors

LC2K, LC8K, LP2K, LP5K

On panel

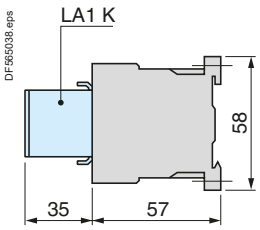

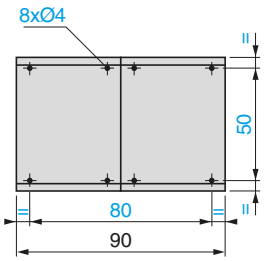

On mounting rail NSYSDR200BD or NSYSDR200 (ـــ 35 mm)

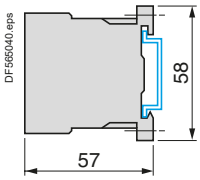

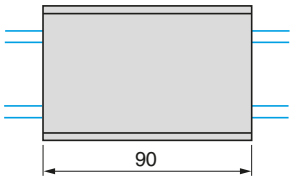

2 x DX1AP25

On one asymmetrical mounting rail DZ5MB on 2 mounting plates DX1AP25.

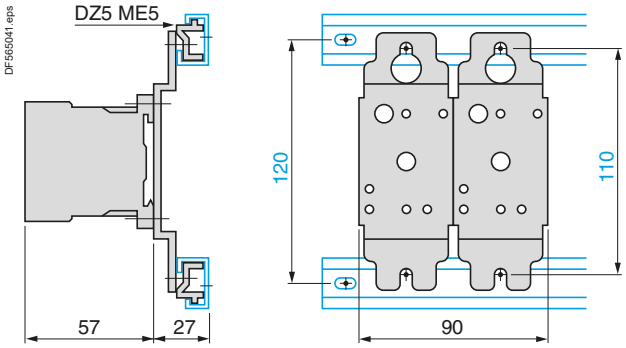

On printed circuit board for reversing contactors or 2 contactors mounted side by side.

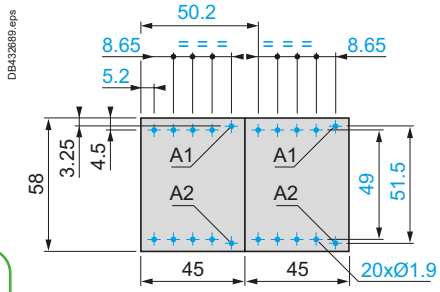

Electronic time delay contact blocks

LA2KT



On reversing contactors

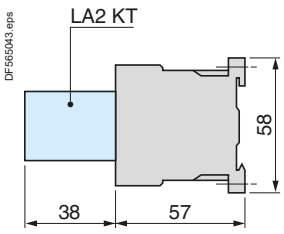

Suppressor modules

LA4K●

On reversing contactors LC2K or LP2 K

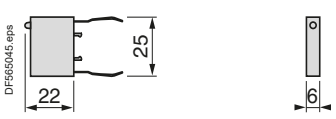

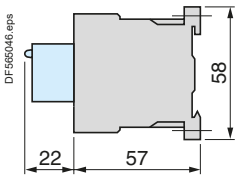

References:
pages B8/8 to B8/11
Characteristics:
pages B8/72 to B8/75
Schemes:
page B8/79

Schemes

3-pole reversing contactors

With integral suppression device

With screw clamp connections — **LC8K** — **LP5K**

3 P + N/O

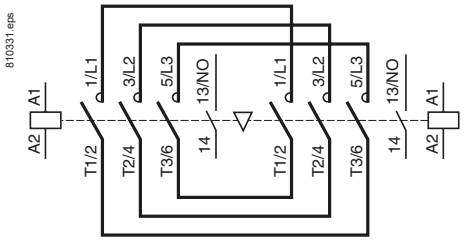

3 P + N/C

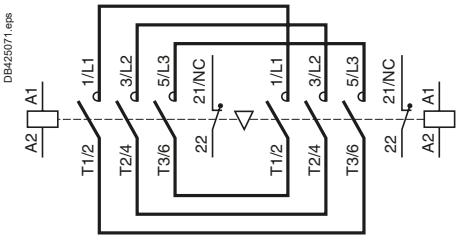

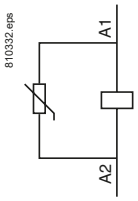

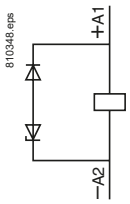

With Faston connectors or solder pins (printed circuit board)

3 P + N/O

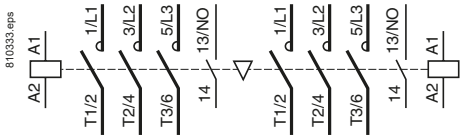

3 P + N/C

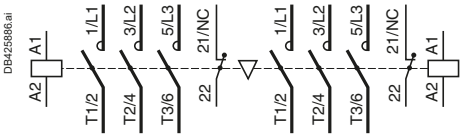

4-pole reversing contactors

Integral suppression device

With screw clamp connections — **With Faston connectors or solder pins (printed circuit board)** — **LC8K** — **LP5K**

4 P

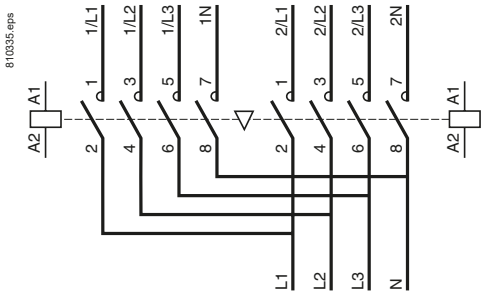

4 P

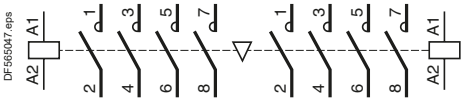

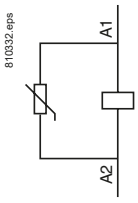

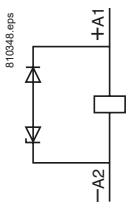

Instantaneous auxiliary contacts LA1K

Terminal referencing conforming to standard EN 50012

LA1KN20, KN207, KN203	LA1KN02, KN027, KN023	LA1KN11, KN117, KN113	LAKN02M	LA1KN11M
2 N/O	2 N/C	1 N/O + 1 N/C	2 N/C	1 N/O + 1 N/C

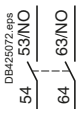

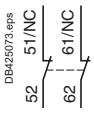

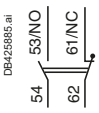

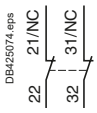

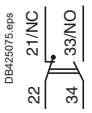

LA1KN40, KN407, KN403	LA1KN31, KN317, KN313	LA1KN22, KN227, KN223	LA1KN13, KN137, KN133	LA1KN04, KN047, KN043
4 N/O	3 N/O + 1 N/C	2 N/O + 2 N/C	1 N/O + 3 N/C	4 N/C



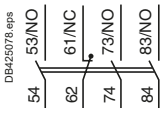

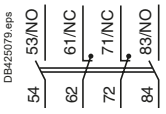

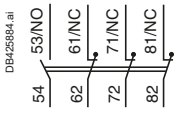

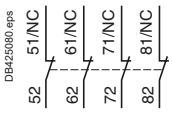

Electronic time delay contact blocks

LA2KT

1 C/O

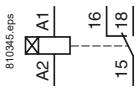

Suppressor modules

LA4KC

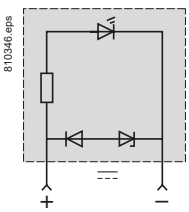

LA4KE

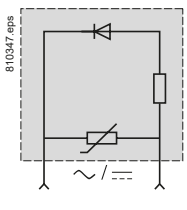

References:
pages B8/8 to B8/11

Characteristics:
pages B8/72 to B8/75

Dimensions:
page B8/78

Characteristics

Environment

Contactor type LC1			D09…D18 DT20 and DT25	D25…D38 DT32 and DT40	D40A…D80A DT60A and DT80A	D80…D95 (1)	D115 and D150
Rated insulation voltage (Ui)	Conforming to IEC 60947-4-1, overvoltage category III, degree of pollution: 3	**V**	690			1000	
	Conforming to UL, CSA	**V**	600				
Rated impulse withstand voltage (Uimp)	Conforming to IEC 60947	**kV**	6			8	
Conforming to standards			IEC/EN 60947-4-1, IEC/EN 60947-5-1, UL 60947-4-1, CSA C22.2 n° 60947-4-1, UL 60947-5-1, CSA C22.2 n° 60947-5-1, GB/T 14048.4				
Product certifications (1)			UL, CSA, CCC, EAC, UKCA, CB certification, EU-RO-MR by DNV-GL			UL, CSA, CCC, EAC, UKCA, CB certification, DNV-GL, RINA, BV, LRoS	
Degree of protection (2) (front face)	Conforming to IEC 60529						
	Power circuit connections		Protection against direct finger contact IP20				
	Coil connection		Protection against direct finger contact IP20				
Climatic withstand			According to IACS E10 and IEC 60947-1 Annex Q category D			According to IACS E10	
Ambient air temperature around the device	Storage	**°C**	-60…+80				
	Operation (3)	**°C**	-40...+60				
	Allowed with derating (3) (4)	**°C**	+60…+70 at Uc to 1.●● x Uc				
Maximum operating altitude	Without derating	**m**	3000				
Operating positions (5)	Without derating in the following positions		AC and DC coils AC/DC and "BBE" coils DF510743.eps 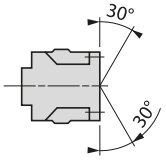		AC coils AC/DC and "BBE" coils DF537812.eps 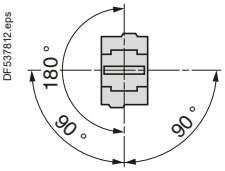	DF537813.eps 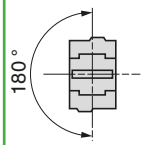	DC coils
	Positions that are not allowed		For ⎓ contactors LC1D09 to LC1D150. DF537814.eps  DF537815.eps 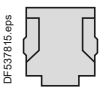				
Flame resistance	Conforming to IEC 60695-2-11	**°C**	850				
Shock resistance (6) 1/2 sine wave = 11 ms Conforming to IEC/EN 60068-2-27	Contactor open		10 gn	8 gn	10 gn	8 gn	6 gn
	Contactor closed		15 gn	15 gn	15 gn	10 gn	15 gn
Vibration resistance (6) 5…300 Hz Conforming to IEC/EN 60068-2-6	Contactor open		2 gn				
	Contactor closed		4 gn	4 gn	4 gn	3 gn	4 gn

*(1) Contactor **LC1D95** with d.c. coil is not UL/CSA certified.*
(2) Protection provided for the cabling c.s.a.'s indicated on the next page and for connection by cable. For lug type: add a protective cover.
(3) As per IEC60947-4-1, operating time and drop out voltage given and tested for -5...+40 °C.
(4) Refer to operational current in AC1 (page A5/40).
(5) When mounting on a vertical rail, use a stop.
(6) Without modifying the power contact states, in the most unfavourable direction (coil energised at Ue).
In case of vibration, it is recommended to mount the devices separately by screws on metal plate.

References: pages B8/18 to B8/28
Dimensions: pages B8/94 to B8/100
Schemes: pages B8/101 and B8/102

Pole characteristics Deca, Deca green contactors

Contactor type			LC1		D09 (3P)	DT20 D098	D12 (3P)	DT25 D128	D18 (3P)	DT32 D188	D25 (3P)	DT40 D258
Rated operational current (Ie) (Ue ≤ 440 V)	In AC-3, θ ≤ 60 °C			**A**	9		12		18		25	
	In AC-1, θ ≤ 60 °C			**A**	25 (1)	20	25 (1)	25	32 (1)	32	40 (1)	40
Rated operational voltage (Ue)	Up to			**V**	690		690		690		690	
Frequency limits	Of the operational current			**Hz**	25…400		25…400		25…400		25…400	
Conventional thermal current (Ith)	θ ≤ 60 °C			**A**	25 (1)	20	25 (1)	25	32 (1)	32	40 (1)	40
Rated making capacity (440 V)	Conforming to IEC 60947			**A**	250		250		300		450	
Rated breaking capacity (440 V)	Conforming to IEC 60947			**A**	250		250		300		450	
Permissible short time rating No current flowing for preceding 15 minutes with θ ≤ 40 °C	For 1 s			**A**	210		210		240		380	
	For 10 s			**A**	105		105		145		240	
	For 1 min			**A**	61		61		84		120	
	For 10 min			**A**	30		30		40		50	
Fuse protection against short-circuits (U ≤ 690 V)	Without thermal overload relay, gG fuse	type 1		**A**	25		40		50		63	
		type 2		**A**	20		25		35		40	
	With thermal overload relay			**A**	See pages B11/4 and B11/5, for aM or gG fuse ratings corresponding to the associated thermal overload relay							
Average impedance per pole	At Ith and 50 Hz			**mΩ**	2.5		2.5		2.5		2	
Power dissipation per pole for the above operational currents	AC-3			**W**	0.20		0.36		0.8		1.25	
	AC-1			**W**	1.56		1.56		2.5		3.2	

Control circuit characteristics, a.c. supply Deca contactors

Rated control circuit voltage (Uc)			50/60 Hz	**V**	12…690
Control voltage limits					
	50 or 60 Hz coils	Operation			–
		Drop-out			–
	50/60 Hz coils	Operation			0.8…1.1 Uc on 50 Hz and 0.85…1.1 Uc on 60 Hz at 60 °C
		Drop-out			0.3…0.6 Uc at 60 °C
Average consumption at 20 °C and at Uc	∼ 50 Hz	Inrush	50 Hz coil	**VA**	–
			Cos φ		0.75
			50/60 Hz coil	**VA**	70
		Sealed	50 Hz coil	**VA**	–
			Cos φ		0.3
			50/60 Hz coil	**VA**	7
	∼ 60 Hz	Inrush	60 Hz coil	**VA**	–
			Cos φ		0.75
			50/60 Hz coil	**VA**	70
		Sealed	60 Hz coil	**VA**	–
			Cos φ		0.3
			50/60 Hz coil	**VA**	7.5
Heat dissipation	50/60 Hz			**W**	2…3
Operating time (2)		Closing "C"		**ms**	12…22
		Opening "O"		**ms**	4…19
Mechanical durability in millions of operating cycles		50 or 60 Hz coil			–
		50/60 Hz coil on 50 Hz			15
Maximum operating rate at ambient temperature ≤ 60 °C		In operating cycles per hour			3600

(1) Versions with spring terminal connections:
*16 A for **LC1D093** and **LC1D123** (20 A possible with 2 x 2.5 mm² in parallel),*
*25 A for **LC1D183** to **LC1D323** (32 A possible for **LC1D183** connected with 2 x 4 mm² cables in parallel; 40 A possible for **LC1D253** and **LC1D323** connected with 2 x 4 mm² in parallel).*
(2) The closing time "C" is measured from the moment the coil supply is switched on to closure of the main poles. The opening time "O" is measured from the moment the coil supply is switched off to the moment the main poles separate.
*(3) The opening time is 40…75 ms for **LX1D8●7** coils and 6...20 ms for **LX1D8●5** and **LX1D8●6** coils.*
*(4) 2400 for **LX1D8●5** and **LX1D8●6** coils and 1200 for **LX1D8●7** coils (refer to page B8/48 for list of coil references).*

References:
pages B8/18 to B8/28
Dimensions:
pages B8/94 to B8/100
Schemes:
pages B8/101 and B8/102

D32	D38	D40A	DT60A	D50A	D65A	D80A	DT80A	D80	D95	D115	D150
32	38	40	–	50	65	66	–	80	95	115	150
50 (1)	50	60	60	80	80	80	80	125	125	200	200
690	690	690	690	690	690	690	690	1000	1000	1000	1000
25…400	25…400	25…400	25…400	25…400	25…400	25…400	25…400	25…400	25…400	25…400	25…400
50	50	60	60	80	80	80	80	125	125	200	200
550	550	800	800	900	1000	1000	1000	1100	1100	1260	1660
550	550	800	800	900	1000	1000	1000	1100	1100	1100	1400
430	430	720	720	810	900	900	900	990	1100	1100	1400
260	310	320	320	400	640	640	640	640	800	950	1200
138	150	165	165	208	260	260	260	320	400	550	580
60	60	72	72	84	110	110	110	135	135	250	250
63	63	80	80	100	125	125	125	200	200	250	315
63	63	80	80	100	125	125	125	160	160	200	250
See pages B11/4 and B11/5 for aM or gG fuse ratings corresponding to the associated thermal overload relay											
2	2	1.5	1.6	1.5	1.5	1.5	1.6	0.8	0.8	0.6	0.6
2	3	2.4	–	3.7	6.3	6.3	–	5.1	7.2	7.9	13.5
5	5	5.4	5.8	9.6	9.6	9.6	10.2	12.5	12.5	24	24

12…690	12…690									24…500	
–	–							0.85…1.1 Uc at 55 °C			
–	–							0.3…0.6 Uc at 55 °C		0.3…0.5 Uc at 55 °C	
0.8…1.1 Uc on 50 Hz and 0.85…1.1 Uc on 60 Hz at 60 °C	0.8…1.1 Uc on 50 Hz and 0.85…1.1 Uc on 60 Hz at 60 °C							0.8…1.1 Uc on 50 Hz and 0.85…1.1 Uc on 60 Hz at 55 °C		0.8…1.15 Uc on 50/60 Hz at 55 °C	
0.3…0.6 Uc at 60 °C	0.3…0.6 Uc at 60 °C							0.3…0.6 Uc at 55 °C		0.3…0.5 Uc at 55 °C	
–	–							200		300	–
0.75	0.75							0.75		0.8	0.9
70	160							245		280…350	280…350
–	–							20		22	–
0.3	0.3							0.3		0.3	0.9
7	15							26		2…18	2…18
–	–							220		300	–
0.75	0.75							0.75		0.8	0.9
70	140							245		280…350	280…350
–	–							22		22	–
0.3	0.3							0.3		0.3	0.9
7.5	13							26		2…18	2…18
2…3	4…5							6…10		3…8	3…4.5
12…22	12…26	12…26	12…26	12…26	12…26	12…26	20…35	20…35	20…50	20…35	
4…19	4…19	4…19	4…19	4…19	4…19	4…19	6…20	6…20	6…20 (3)	40…75	
–	–	–	–	–	–	–	10	10	8	–	
15	6	6	6	6	6	6	4	4	8	8	
3600	3600	3600	3600	3600	3600	3600	3600	3600	2400 (4)	1200	

Characteristics

d.c. control circuit characteristics Deca contactors

Contactor type				LC1D09…D38 LC1DT20…DT40	LC1D40A…D80A LC1DT60A and DT80A	LC1 or LP1D80 LC1D95	LC1D115 and LC1D150
Rated control circuit voltage (Uc)	⎓		**V**	12…440	12…440		24…440
Rated insulation voltage	Conforming to IEC 60947-1		**V**	690			
	Conforming to UL, CSA		**V**	600			
Control voltage limits	Operation	Standard coil		0.7…1.25 Uc at 60 °C	0.75…1.25 Uc at 60 °C	0.85…1.1 Uc at 55 °C	0.75…1.2 Uc at 55 °C
		Wide range coil		–	–	0.75…1.2 Uc at 55 °C	–
	Drop-out			0.1…0.25 Uc at 60 °C	0.1…0.3 Uc at 60 °C	0.1…0.3 Uc at 55 °C	0.15…0.4 Uc at 55 °C
Average consumption at 20 °C and at Uc	⎓	Inrush	**W**	5.4	19	22	270…365
		Sealed	**W**	5.4	7.4	22	2.4…5.1
Operating time (1) average at Uc	Closing	"C"	**ms**	63 ±15 %	50 ±15%	95…130	20…35
	Opening	"O"	**ms**	20 ±20 %	20 ±20%	20…35	40…75
				Note: *The arcing time depends on the circuit switched by the poles. For all normal 3-phase applications, the arcing time is less than 10 ms. The load is isolated from the supply after a time equal to the sum of the opening time and the arcing time.*			
Time constant (L/R)			**ms**	28	34	75	25
Mechanical durability at Uc	In millions of operating cycles			30	10	10	8
Maximum operating rate at ambient temperature ⩽ 60 °C	In operating cycles per hour			3600	3600	3600	1200

Low consumption control circuit characteristics Deca contactors

Rated insulation voltage	Conforming to IEC 60947-1		**V**	690	–
	Conforming to UL, CSA		**V**	600.	–
Maximum voltage	Of the control circuit on ⎓		**V**	250	–
Average consumption d.c. at 20 °C and at Uc	Wide range coil (0.8…1.25 Uc)	Inrush	**W**	2.4	–
		Sealed	**W**	2.4	–
Operating time (1) at Uc and at 20 °C	Closing	"C"	**ms**	77 ±15 %	–
	Opening	"O"	**ms**	25 ±20 %	–
Voltage limits (θ ⩽ 60 °C) of the control circuit	Operation			0.8 to 1.25 Uc	–
	Drop-out			0.1…0.3 Uc	–
Time constant (L/R)			**ms**	40	–
Mechanical durability	In millions of operating cycles			30	–
Maximum operating rate at ambient temperature ⩽ 60 °C	In operating cycles per hour			3600	–

(1) The operating times depend on the type of contactor electromagnet and its control mode.
The closing time "C" is measured from the moment the coil supply is switched on to initial contact of the main poles.
The opening time "O" is measured from the moment the coil supply is switched off to the moment the main poles separate.

Ref.
Contactors

References: pages B8/22 to B8/28
Dimensions: pages B8/94 to B8/97
Schemes: pages B8/101 and B8/102

Characteristics

Wide band Deca green contactors AC/DC coil circuit characteristics

Rated control circuit voltage (Uc)		**V**	AC/DC 24...250						
	Operation	**V**	0.85 Uc mini...1.1 Uc maxi at 60 °C in AC or DC (BNE coil: 0.8 Uc mini at 24 VDC, 0.85 Uc mini in AC).						
	Drop-out	**V**	0.1 Uc maxi (e.g. 100 to 250 V = 25 V at 60 °C)						
Contactor type			**LC1D09...D38**			**LC1D40A...D80A, LC1DT60A, LC1DT80A**			
Coil code			**BNE**	**EHE**	**KUE**	**BBE**	**BNE**	**EHE**	**KUE**
Rated control circuit voltage (Uc)			24-60	48-130	100-250	24 DC	24-60	48-130	100-250
AC supply at 20°C	Consumption inrush	**VA**	15	25	25	-	15	23	18
	Consumption sealed	**VA**	0.9	1.3	1.6	-	1	1.4	1.8
	Consumption sealed	**mA**	28	15	9	-	35	17	9.5
	Heat dissipation	**W**	0.6	0.8	1.1	-	0.8	0.9	1.3
DC supply at 20°C	Consumption inrush	**W**	14	24	18	11	16	19	14
	Consumption sealed	**mA**	23	13	7	20	30	15	7.7
	Heat dissipation	**W**	0.6	0.8	1.1	0.5	0.7	0.9	1.2
Max operating time (2)	Closing "C"	**ms**	50 ±5 ms			60 ±5 ms			
	Opening "O"	**ms**	20...90 ms			20...80 ms			
EMC immunity			Meets IEC 60947-4-1 standard, table 12						
EMC emission	IEC 60947-4-1 §9.4.3		Environment A (1)						
Maximum operating rate at ambient temperature ⩽ 60°C		**cycle/h**	3600						
Mechanical durability at Uc In millions of operating cycles			15			6			

(1) Use of this product in EMC environment B may require mitigation measures to avoid unwanted disturbance.
(2) The closing time "C" is measured from the moment the coil supply is switched on to closure of the main poles. The opening time "O" is measured from the moment the coil supply is switched off to the moment the main poles separates.

Ref.
Contactors

References:
pages B8/18 to B8/21
Dimensions:
pages B8/98 to B8/100
Schemes:
pages B8/101 and B8/102

Characteristics

Power circuit connections

Screw clamp terminal connections Deca, Deca green contactors

Contactor type		LC1	D09 and D12 DT20 and DT25	D18 (3P)	D25 (3P)	D32	D38	D18 and D25 (4P) DT32 and DT40	D40A to D80A DT60A and DT80A (1)	D80 and D95	D115 and D150
Tightening			Screw clamp terminals					Connector 2 inputs	Screw clamp terminals	Connector 1 input	Connector 2 inputs
Flexible cable without cable end	1 conductor	mm²	1…4	1.5…6	2.5…10			2.5…10	1…35	4…50	10…120
	2 conductors	mm²	1…4	1.5…6	2.5…10			2.5…10	1…25 and 1…35	4…25	10…120 + 10…50
Flexible cable with cable end	1 conductor	mm²	1…4	1…6	1…10			2.5…10	1…35	4…50	10…120
	2 conductors	mm²	1…2.5	1…4	1.5…6			2.5…10	1…25 and 1…35	4…16	10…120 + 10…50
Solid cable without cable end	1 conductor	mm²	1…4	1.5…6	1.5…10			2.5…16	1…35	4…50	10…120
	2 conductors	mm²	1…4	1.5…6	2.5…10			2.5…16	1…25 and 1…35	6…25	10…120 + 10…50
Screwdriver	Philips / Pozidriv		N° 2	N° 2	N° 2			N° 2	–	–	–
	Flat screwdriver Ø		Ø6	Ø6	Ø6			Ø6	–	Ø6…Ø8	–
Hexagonal key			–	–	–			–	4	4	4
Tightening torque		N.m	1.7	1.7	2.5			1.8	5: ≤ 25 mm² 8: 35 mm²	12	12

Spring terminal connections (2) Deca contactors

Flexible cable without cable end	1 conductor	mm²	2.5 (4: DT25)	4	4	4	–	10	–	–	
	2 conductors	mm²	2.5 (except DT25)	4	4	4	–	–	–	–	

Connection by bars or lugs Deca contactors

Bar c.s.a.			–	–	–	–		–	–	3 x 16	5 x 25
Lug external Ø		mm	8	8	10	10		8	16.5	17	25
Ø of screw		mm	M3.5	M3.5	M4	M4		M3.5	M6	M6	M8
Screwdriver	Philips / Pozidriv		N° 2	N° 2	N° 2	N° 2		N° 2	–	–	–
	Flat screwdriver Ø		Ø6	Ø6	Ø6	Ø6		Ø6	–	Ø8	–
Key for hexagonal headed screw			–	–	–	–		–	10	10	13
Tightening torque		N.m	1.7	1.7	2.5	2.5		1.8	6	9	12

Control circuit connections

Connection by cable (tightening via screw clamps) Deca, Deca green contactors

Flexible cable without cable end	1 conductor	mm²	1…4	1…4	1…4	1…4		1…4	1…4	1…4	1…2.5
	2 conductors	mm²	1…4	1…4	1…4	1…4		1…4	1…4	1…4	1…2.5
Flexible cable with cable end	1 conductor	mm²	1…4	1…4	1…4	1…4		1…4	1…4	1…2.5	1…2.5
	2 conductors	mm²	1…2.5	1…2.5	1…2.5	1…2.5		1…2.5	1…2.5	1…2.5	1…2.5
Solid cable without cable end	1 conductor	mm²	1…4	1…4	1…4	1…4		1…4	1…4	1…4	1…2.5
	2 conductors	mm²	1…4	1…4	1…4	1…4		1…4	1…4	1…4	1…2.5
Screwdriver	Philips / Pozidriv		N° 2	N° 2	N° 2	N° 2		N° 2	N° 2	N° 2	N° 2
	Flat screwdriver Ø		Ø6	Ø6	Ø6	Ø6		Ø6	Ø6	Ø6	Ø6
Tightening torque		N.m	1.7	1.7	1.7	1.7		1.7	1.7	1.2	1.2

Spring terminal connections (2) Deca contactors

Flexible cable without cable end	1 conductor	mm²	2.5	2.5	2.5	2.5	–	2.5	0.75…2.5	–	–
	2 conductors	mm²	2.5	2.5	2.5	2.5	–	2.5	0.75…2.5	–	–

Connection by bars or lugs Deca contactors

Lug external Ø		mm	8	8	8	8		8	8	8	8
Ø of screw		mm	M3.5	M3.5	M3.5	M3.5		M3.5	M3.5	M3.5	M3.5
Screwdriver	Philips / Pozidriv		N° 2	N° 2	N° 2	N° 2		N° 2	N° 2	N° 2	N° 2
	Flat screwdriver Ø		Ø6	Ø6	Ø6	Ø6		Ø6	Ø6	Ø6	Ø6
Tightening torque		N.m	1.7	1.7	1.7	1.7		1.7	1.7	1.2	1.2

*(1) BTR screws: hexagon socket head. In accordance with local electrical wiring regulations, a size 4 insulated Allen key must be used (reference **LADALLEN4**, see page B8/42).*
(2) If cable ends are used, choose the next size down (example: for 2.5 mm², use 1.5 mm²) and square crimp the cable ends using a special tool.

References:
pages B8/18 to B8/28
Dimensions:
pages B8/94 to B8/100
Schemes:
pages B8/101 and B8/102

Characteristics of auxiliary contacts incorporated in the contactor

Mechanically linked contacts	Conforming to IEC 60947-5-1			Each contactor has 2 N/O and N/C contacts mechanically linked on the same movable contact holder
Mirror contact	Conforming to IEC 60947-4-1			The N/C contact on each contactor represents the state of the power contacts and can be connected to a PREVENTA safety module
Rated operational voltage (Ue)	Up to		**V**	690
Rated insulation voltage (Ui)	Conforming to IEC 60947-1		**V**	690
	Conforming to UL, CSA		**V**	600
Conventional thermal current (Ith)	For ambient temperature ≤ 60 °C		**A**	10
Frequency of the operational current			**Hz**	25…400
Minimum switching capacity λ = 10^{-8}	U min		**V**	17
	I min		**mA**	5
Short-circuit protection	Conforming to IEC 60947-5-1			gG fuse: 10 A
Rated making capacity	Conforming to IEC 60947-5-1, I rms		**A**	∼: 140, ⎓: 250
Short-time rating	Permissible for	1 s	**A**	100
		500 ms	**A**	120
		100 ms	**A**	140
Insulation resistance			**MΩ**	> 10
Non-overlap time	Guaranteed between N/C and N/O contacts		**ms**	1.5 (on energisation and on de-energisation)
Tightening torque	Pozidriv / Philips head n° 2 and Ø6		**N.m**	1.7

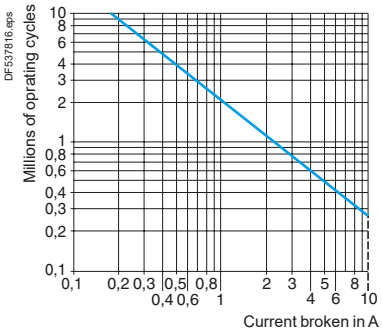

AC-15

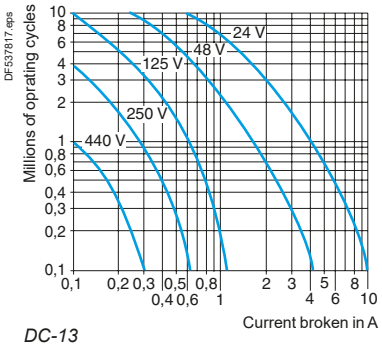

DC-13

Operational power of contacts conforming to IEC 60947-5-1

a.c. supply, categories AC-14 and AC-15

Electrical durability (valid for up to 3600 operating cycles/hour) on an inductive load such as the coil of an electromagnet: making current (cos φ 0.7) = 10 times the power broken (cos φ 0.4).

Operating cycles	V	24	48	115	230	400	440	600
1 million	**VA**	60	120	280	560	960	1050	1440
3 million	**VA**	16	32	80	160	280	300	420
10 million	**VA**	4	8	20	40	70	80	100

d.c. supply, category DC-13

Electrical durability (valid for up to 1200 operating cycles/hour) on an inductive load such as the coil of an electromagnet, without economy resistor, the time constant increasing with the load.

Operating cycles	V	24	48	125	250	440
1 million	**W**	96	76	76	76	44
3 million	**W**	48	38	38	32	–
10 million	**W**	14	12	12	–	–

References:
pages B8/18 to B8/28

Dimensions:
pages B8/94 to B8/100

Schemes:
pages B8/101 and B8/102

Characteristics

Environment

Contact block type (not dust/damp protected)				LADN or LADC	LADT and LADS	LADR	LAD8
Conforming to standards				IEC/EN 60947-5-1, UL 60947-5-1, CSA C22.2 n° 60947-5-1, GB/T 14048.5			
Product certifications				UL, CSA, CCC, EAC, UKCA, CB certification			
Degree of protection	Conforming to IEC 60529			Protection against direct finger contact IP 2X			
Ambient air temperature around the device	Storage		°C	-60…+80			
	Operation		°C	-5…+60			
Maximum operating altitude	Without derating		m	3000			
Connection by cable	Phillips n° 2 and Ø6 mm Flexible or solid cable with or without cable end		mm²	Min: 1 x 1; max: 2 x 2.5			
Tightening torque			N.m	1.7			
Spring terminal connections	Flexible or solid cable without cable end		mm²	Max: 2 x 2.5			

Instantaneous and time delay contact characteristics

Number of contacts				1, 2 or 4	2	2	2
Rated operational voltage (Ue)	Up to		V	690			
Rated insulation voltage (Ui)	Conforming to IEC 60947-5-1		V	690			
	Conforming to UL, CSA		V	600			
Conventional thermal current (Ith)	For ambient temperature ≤ 60 °C		A	10			
Frequency of the operational current			Hz	25…400			
Minimum switching capacity		U min	V	17			
		I min	mA	5			
Short-circuit protection	Conforming to IEC 60947-5-1 gG fuse		A	10			
Rated making capacity	Conforming to IEC 60947-5-1	I rms	A	∼: 140; ⎓: 250			
Short-time rating	Permissible for	1 s	A	100			
		500 ms	A	120			
		100 ms	A	140			
Insulation resistance			MΩ	> 10			
Non-overlap time	Guaranteed between N/C and N/O contacts		ms	1.5 (on energisation and on de-energisation)			
Overlap time	Guaranteed between N/C and N/O contacts on LADC22		ms	1.5	–	–	–
Time delay (LADT, R and S contact blocks) Accuracy only valid for setting range indicated on the front face	Ambient air temperature for operation		°C	–	-40…+70	-40…+70	–
	Repeat accuracy			–	±2 %	±2 %	–
	Drift up to 0.5 million operating cycles			–	+15 %	+15 %	–
	Drift depending on ambient air temperature			–	0.25 % per °C	0.25 % per °C	–
Mechanical durability	In millions of operating cycles			30	5	5	30
Operational power of contacts				See page B8/90			

Ref.
Contactors

References: page B8/36
Dimensions: pages B8/94 and B8/95
Schemes: pages B8/101 and B8/102

Characteristics

Environment

Contact block type (dust/damp protected)			LA1DX	LA1DZ (4 contacts: 2 protected + 2 non protected)		LA1DY
			Protected	Protected	Non protected	Protected
Conforming to standards			IEC/EN 60947-5-1, UL 60947-5-1, CSA C22.2 n° 60947-5-1, GB/T 14048.5			
Product certifications			UL, CSA, CCC, EAC, UKCA, CB certification			
Degree of protection	Conforming to IEC 60529		Protection against direct finger contact IP 2X			
Ambient air temperature	Storage and operation	**°C**	-25…+70			
Cabling	Phillips n° 2 and Ø6 mm Flexible or solid conductor with or without cable end	**mm²**	Min: 1 x 1; max: 2 x 2.5			
Tightening torque		**N.m**	1.7			
Number of contacts			2	2	2	2

Contact characteristics

Rated operational voltage (Ue)	Up to		**Vac**	125	125	690	125
			Vdc	30	30		30
Rated insulation voltage (Ui)	Conforming to IEC 60947-5-1		**V**	250	250	690	250
	Conforming to UL, CSA		**V**	–	–	600	–
Conventional thermal current (Ith)	For ambient temperature ≤ 40 °C		**A**	–	–	10	–
Maximum operational current (Ie)			**mA**	100	100	–	100
Frequency of the operational current			**Hz**	–	–	25…400	–
Minimum switching capacity		U min	**V**	5	5	17	5
		I min	**mA**	1	1	5	1
Short-circuit protection	Conforming to IEC 609475-1 gG fuse		**A**	–	–	10	–
Rated making capacity	Conforming to IEC 609475-1	I rms	**A**	–	–	∿:140; ⎓: 250	–
Short-time rating	Permissible for	1 s	**A**	–	–	100	–
		500 ms	**A**	–	–	120	–
		100 ms	**A**	–	–	140	–
Insulation resistance			**MΩ**	> 10	> 10	> 10	> 10
Mechanical durability	In millions of operating cycles			5	5	30	5
Materials and technology used for dust and damp protected contacts				Gold alloy - Single break	Gold alloy - Single break	–	Gold alloy - Single break with crossed bars

Ref.
Contactors

References: page B8/36
Dimensions: pages B8/94 and B8/95
Schemes: pages B8/101 and B8/102

Rated operational power of not dust/damp protected contacts (conforming to IEC 60947-5-1)

a.c. supply, categories AC-14 and AC-15

Electrical durability (valid for up to 3600 operating cycles/hour) on an inductive load such as the coil of an electromagnet: making current (cos φ 0.7) = 10 times the power broken (cos φ 0.4).

Operating cycles	V	24	48	115	230	400	440	600
1 million	**VA**	60	120	280	560	960	1050	1440
3 million	**VA**	16	32	80	160	280	300	420
10 million	**VA**	4	8	20	40	70	80	100

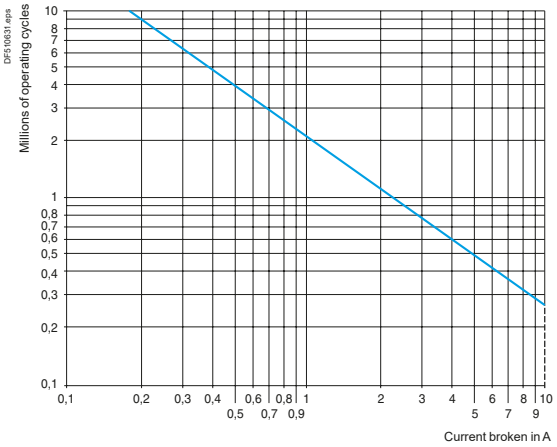

d.c. supply, category DC-13

Electrical durability (valid for up to 1200 operating cycles/hour) on an inductive load such as the coil of an electromagnet, without economy resistor, the time constant increasing with the load.

Operating cycles	V	24	48	125	250	440
1 million	**W**	96	76	76	76	44
3 million	**W**	48	38	38	32	–
10 million	**W**	14	12	12	–	–

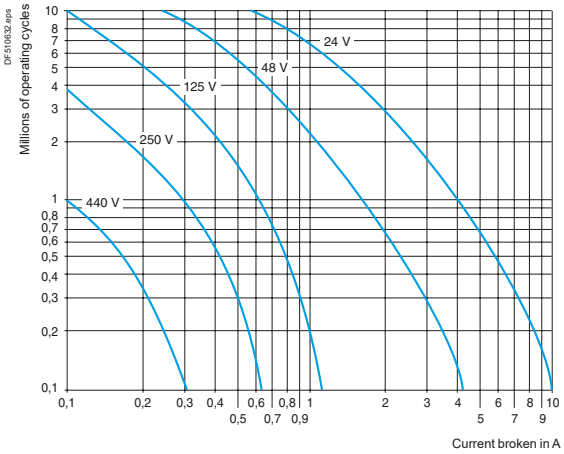

Ref.
Contactors

Characteristics

Environment

Conforming to standards			IEC/EN 60947-5-1, UL 60947-5-1, CSA C22.2 n° 60947-5-1, GB/T 14048.5
Product certifications			UL, CSA
Degree of protection	Conforming to IEC 60529		Protection against direct finger contact IP 2X
Ambient air temperature around the device	Storage	°C	-40…+80
	Operation	°C	-25…+55
	Permissible for operation at Uc	°C	-25…+70

Suppressor modules Deca contactors

Module type			LA4DA, LAD4RC, LAD4RC3	LA4DB, LAD4T, LAD4T3	LA4DC, LAD4D3	LA4DE, LAD4V, LAD4V3
Type of protection			RC circuit	Bidirectional peak limiting diode	Diode	Varistor
Rated control circuit voltage (Uc)		V	∿ 24…415	∿ or ⎓ 24…440	⎓ 12…250	∿ or ⎓ 24…250
Maximum peak voltage			3 Uc	2 Uc	Uc	2 Uc
Natural RC frequency	24/48 V	Hz	400	–	–	–
	50/127 V	Hz	200	–	–	–
	110/240 V	Hz	100	–	–	–
	380/415 V	Hz	150	–	–	–

Mechanical latch blocks (1) Deca, Deca green contactors

Mechanical latch block type				LAD6K10	LA6DK20
For use on contactor				**LC1D09…D80A DT20…DT80A**	**LC1D80…D150 LP1D80 and LC1D115**
Product certifications				UL, CSA	UL, CSA
Rated insulation voltage	Conforming to IEC 60947-5-1		V	690	690
Rated control circuit voltage	∿ 50/60 Hz and ⎓		V	24…415	24…415
Power required	For unlatching	∿	VA	25	25
		⎓	W	30	30
Maximum operating rate	In operating cycles/hour			1200	1200
On-load factor				10 %	10 %
Mechanical durability at Uc	In millions of operating cycles			0.5	0.5

(1) Unlatching can be manually operated or electrically controlled (pulsed).
*The **LA6DK** or **LAD6K** latch coil and the **LC1D** operating coil must not be energised simultaneously.*
*The duration of the **LA6DK** or **LAD6K** and **LC1D** control signals must be ≥ 100 ms.*

Ref.
Contactors

References:
pages B8/37 and B8/38
Dimensions:
pages B8/94 and B8/95
Schemes:
page B8/102

Characteristics

Environment Deca, Deca green contactors

Module type			**LA4DT** (On-delay)
Conforming to standards			IEC 60255-5
Product certifications			UL, CSA
Degree of protection	Conforming to IEC 60529		Protection against direct finger contact IP 2X
Ambient air temperature around the device	Storage	**°C**	-40…+80
	Operation	**°C**	-25…+55
	For operation at Uc	**°C**	-25…+70
Rated insulation voltage (Ui)	Conforming to IEC 60947-1	**V**	250
Cabling	Phillips n° 2 and Ø6 mm Flexible or solid conductor with or without cable end	**mm²**	Min: 1 x 1; max: 2 x 2.5
Tightening torque		**N.m**	1.7

Control circuit characteristics

Built-in protection	Of the input		By varistor
	Contactor coil suppression		By varistor
Rated control circuit voltage (Uc)		**V**	∼ or ⎓: 24…250
Permissible variation			0.8…1.1 Uc
Type of control			By mechanical contact only

Timing characteristics

Timing ranges		**s**	0.1…2; 1.5…30; 25…500
Repeat accuracy	0…40 °C		±3 % (10 ms minimum)
Reset time	During time delay period	**ms**	150
	After time delay period	**ms**	50
Immunity to microbreaks	During time delay period	**ms**	10
	After time delay period	**ms**	2
Minimum control pulse duration		**ms**	–
Time delay signalling	By LED		Illuminates during time delay period

Switching characteristics (solid state type)

Maximum power dissipated		**W**	2
Leakage current		**mA**	< 5
Residual voltage		**V**	3.3
Overvoltage protection			3 kV; 0.5 joule
Electrical durability	In millions of operating cycles		30

Function diagram

Electronic on-delay timer LA4DT

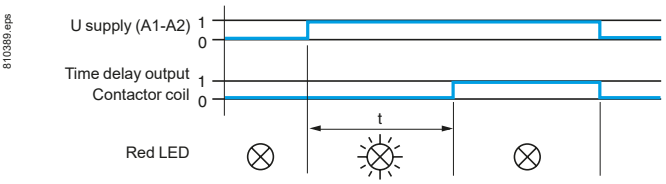

References:
page B8/40
Dimensions:
pages B8/94 and B8/95
Schemes:
pages B8/101 and B8/102

Characteristics

Environment Deca, Deca green contactors

Conforming to standards			IEC 60255-5
Product certifications			UL, CSA
Degree of protection	Conforming to IEC 60529		Protection against direct finger contact IP 2X
Ambient air temperature around the device	Storage	**°C**	-40…+80
	Operation	**°C**	-25…+55
	Permissible for operation at Uc	**°C**	-25…+70

Other characteristics

Module type			**LA4DFB for Deca contactors** With relay	**LA4DWB for Deca, Deca green contactors** Solid state
Conventional thermal current (Ith)	For ambient temperature ≤ 50 °C	**A**	8	
Rated insulation voltage	Conforming to IEC 60947-5-1	**V**	250	
Rated operational voltage	Conforming to IEC 60947-5-1	**V**	250	
Indication of input state			By integral LED which illuminates when the contactor coil is energised	
Input signals	Control voltage (E1-E2)	**V**	⎓ 24	⎓ 24
	Permissible variation	**V**	17…30	5…30
	Current consumption at 20 °C	**mA**	25	8.5 for 5 V 15 for 24 V
	State “0” guaranteed for U	**V**	< 2.4	< 2.4
	I	**mA**	< 2	< 2
	State “1” guaranteed for U	**V**	17	5
Built-in protection	Against reversed polarity		By diode	By diode
	Of the input		By diode	By diode
Electrical durability at 220 A/240 V	In millions of operating cycles		10	20
Maximum immunity to microbreaks		**ms**	4	1
Power dissipated	At 20 °C	**W**	0.6	0.4
Direct mounting on contactor	With coil ∿ 24…250 V		**LC1D80…D150**	–
	∿ 100…250 V		–	**LC1D80…D115**
	∿ 380…415 V		–	–
Mounting with cabling adapter LAD4BB	With coil ∿ 24…250 V		**LC1D09…D38, LC1DT20…DT40**	**LC1D09…D38, LC1DT20…DT40**
	∿ 380…415 V		–	–
Mounting with cabling adapter LAD4BB3	With coil ∿ 24…250 V		**LC1D40A…D80A**	**LC1D40A…D80A**
	∿ 380…415 V		**LC1D40A…D80A**	**LC1D40A…D80A**

Total operating time at Uc (of the contactor)

The operating times depend on the type of contactor electromagnet and its control mode. The closing time "C" is measured from the moment the coil supply is switched on to initial contact of the main poles. The opening time "O" is measured from the moment the coil supply is switched off to the moment the main poles separate.

			LC1D09…D38, LC1DT20…DT40	**LC1D40A…D80A**	**LC1D80 and D95**	**LC1D115**	**LC1D150**
With **LA4DFB**	"C"	**ms**	20…30	28…34	28…43	28...58	28...43
	“O”	**ms**	16…24	20…24	18…32	18...32	52...87

Cabling	Phillips n° 2 and Ø6 mm Flexible or solid cable with or without cable end	**mm²**	Min: 1 x 1; max: 2 x 2.5
Tightening torque		**N.m**	1.7

References: page B8/40
Dimensions: pages B8/94 and B8/95
Schemes: pages B8/101 and B8/102

Dimensions

LC1D09…D18 (3-pole)

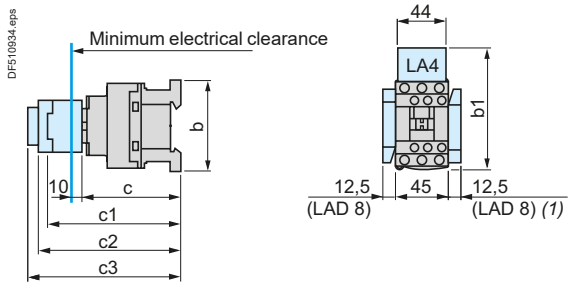

LC1D25…D38 (3-pole), **LC1DT20…DT40** (4-pole)

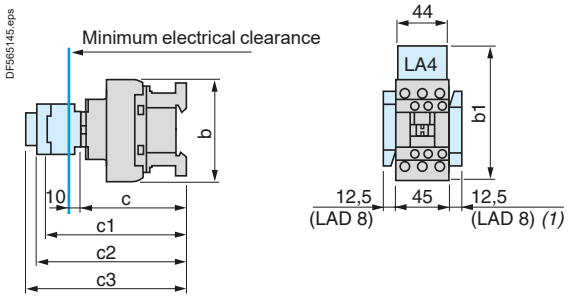

LC1		D09…D18	D093… D123	D099… D129	D25… D38	D183… D323	D098, D128, DT20 and DT25	DT203 and DT253	DT32 and DT40	D188, D258, DT323 and DT403
b	without add-on blocks	77	99	80	85	99	85	99	91	105
b1	with LAD4BB	94	107	95,5	98	107	98	–	–	–
	with LA4D●2	110 (1)	123 (1)	111.5 (1)	114 (1)	123 (1)	114	–	–	–
	with LA4DF, DT	119 (1)	132 (1)	120.5 (1)	123 (1)	132 (1)	129	–	–	–
	with LA4DW, DL	126 (1)	139 (1)	127.5 (1)	130 (1)	139 (1)	190	–	–	–
c	without cover or add-on blocks	84	84	84	90	90	90	90	97	97
	with cover, without add-on blocks	86	86	86	92	92	92	92	99	99
c1	with LADN or C (2 or 4 contacts)	117	117	117	123	123	123	123	131	131
c2	with LAD6K10	129	129	129	135	135	135	135	143	143
c3	with LADT, R, S	137	137	137	143	143	143	143	151	151
	with LADT, R, S and sealing cover	141	141	141	147	147	147	147	155	155

*(1) Including **LAD4BB**.*

LC1D40A…D80A (3-pole), **LC1DT60A…DT80A** (4-pole)

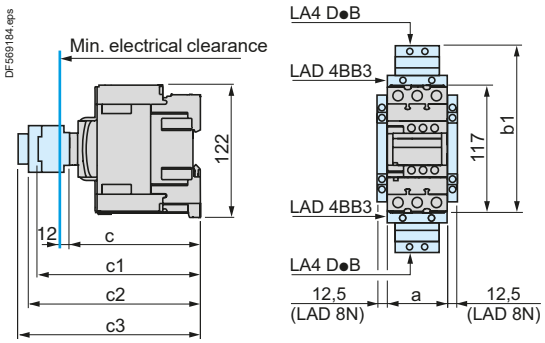

LC1D80 and **D95** (3-pole), **LC1D80004** and **D80008** (4-pole), **D40008** and **D65008** (4-pole)

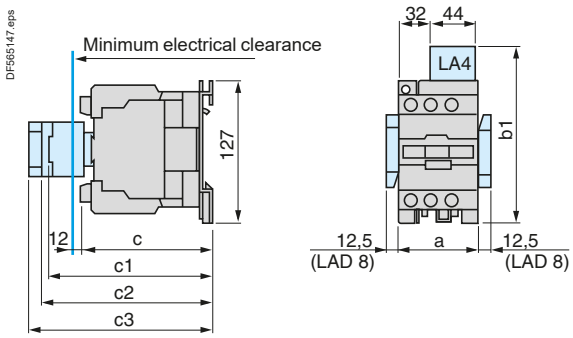

LC1		D40A…D80A	DT60A…DT80A	D40008	D80	D95, D65008	D80004	D80008
a		55	70	85	85	85	96	96
b1	with LA4D●2	–	–	135	135	135	135	135
	with LA4DB3 or LAD4BB3	136	–	–	135	–	–	–
	with LA4DF, DT	157	–	142	142	142	142	142
	with LA4DM, DW, DL	166	–	150	150	150	150	150
c	without cover or add-on blocks	118	118	125	125	125	125	140
	with cover, without add-on blocks	120	120	–	130	130	–	–
c1	with LADN (1 contact)	–	–	139	150	150	150	150
	with LADN or C (2 or 4 contacts)	150	150	147	158	158	158	158
c2	with LAD6K10 or LA6DK	163	163	159	170	170	170	170
c3	with LADT, R, S	171	171	167	178	178	178	178
	with LADT, R, S and sealing cover	175	175	171	182	182	182	182

LC1D115 and **D150** (3-pole), **LC1D115004** (4-pole)

LC1		D115, D150	D115004	D1150046
a		120	150	155
b1	with LA4DA2	174	174	174
	with LA4DF, DT	185	185	185
	with LA4DM, DL	188	188	188
	with LA4DW	188	188	188
c	without cover or add-on blocks	132	132	115
	with cover, without add-on blocks	136	–	–
c1	with LADN or C (2 or 4 contacts)	150	150	150
c2	with LA6DK20	155	155	155
c3	with LADT, R, S	168	168	168
	with LADT, R, S and sealing cover	172	172	172

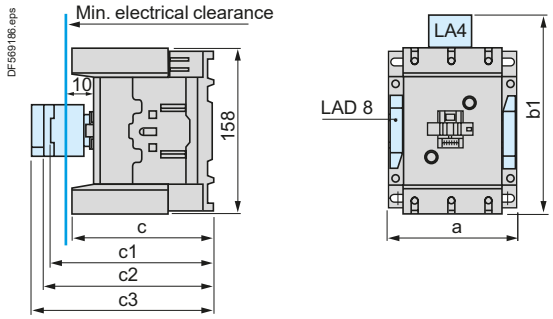

References:
pages B8/22 to B8/28
Characteristics:
pages B8/80 to B8/87
Schemes:
pages B8/101 and B8/102

Dimensions

LC1D09…D18 (3-pole)

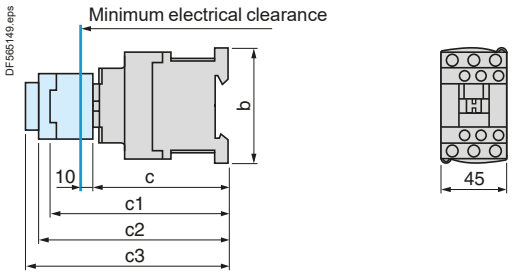

LC1D25…D38 (3-pole)

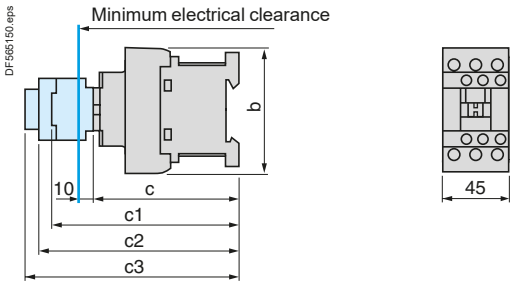

LC1		D09…D18	D093…D123	D099…D129	D25…D38	D183…D323
b		77	99	80	85	99
c	without cover or add-on blocks	93	93	93	99	99
	with cover, without add-on blocks	95	95	95	101	101
c1	with LADN or C (2 or 4 contacts)	126	126	126	132	132
c2	with LAD6K10	138	138	138	144	144
c3	with LADT, R, S	146	146	146	152	152
	with LADT, R, S and sealing cover	150	150	150	156	156

LC1DT20…DT40 (4-pole)

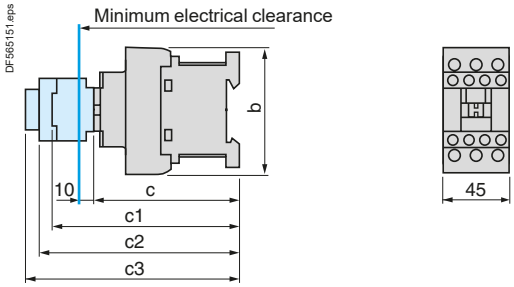

LC1		DT20 and DT25 D098 and D128	DT203 and DT253 D0983 and D1283	DT32 and DT40 D188…D258	DT323 and DT403 D1883 and D2583
b		85	99	91	105
c	with cover	102	102	107	107
c1	with LADN or C (2 or 4 contacts)	123	123	131	131
c2	with LAD6K10	135	135	143	143
c3	with LADT, R, S	143	143	151	151
	with LADT, R, S and sealing cover	147	147	155	155

LC1D40A…D80A (3-pole), **LC1DT60A…DT80A** (4-pole)

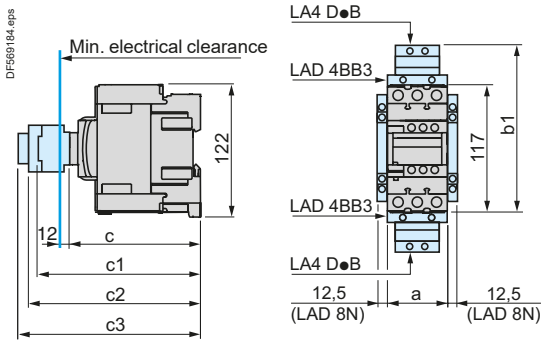

LC1D80 and **D95** (3-pole), **LP1D80004, LP1D80008** (4-pole), **LP1D40008** and **D65008** (4-pole)

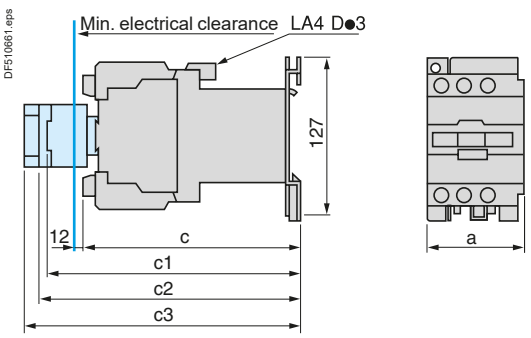

		LC1D40A … D80A	LC1 DT60A…DT80A	LP1D40008 and D65008	LC1 D80 and D95	LP1D80004	LP1D80008
a		55	72	85	85	96	96
b1	with LAD4BB3	136	136	–	–	–	–
	with LA4DF, DT	157	157	–	–	–	–
c	without cover or add-on blocks	118	118	182	181	181	196
	with cover, without add-on blocks	120	120	–	186	–	–
c1	with LADN (1 contact)	–	–	196	204	204	204
	with LADN or C (2 or 4 contacts)	150	150	202	210	210	210
c2	with LAD6K10 or LA6DK20	163	163	213	221	221	221
c3	with LADT, R, S	171	171	221	229	229	229
	with LADT, R, S and sealing cover	175	175	225	233	233	233

LC1D115●●● and **LC1D150●●●** with ⎓ coil: see page B8/94.

References:
pages B8/22 to B8/28
Characteristics:
pages B8/80 to B8/87
Schemes:
pages B8/101 and B8/102

Mounting

LC1D09…D38, DT20…DT40

On mounting rail NSYSDR200BD, NSYSDR200BD or NSYSDR200 (width 35 mm)

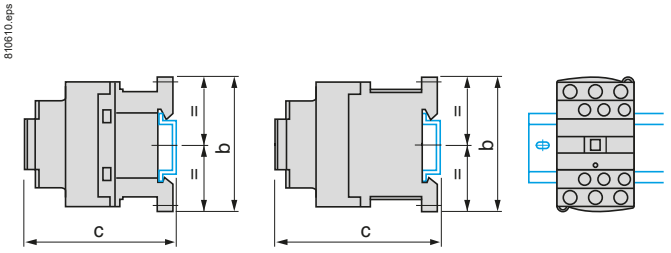

Control circuit: a.c.

LC1	D09… D18	D25… D38	DT20 and DT25	DT32 and DT40
b	77	85	85	100
c (NSYSDR200BD or NSYSDR200BD) (1)	88	94	94	109
c (NSYSDR200) (1)	96	102	102	117

Control circuit: d.c.

LC1	D09… D18	D25… D38	DT20 and DT25	DT32 and DT40
b	77	85	94	109
c (NSYSDR200BD or NSYSDR200BD) (1)	97	103	103	118
c (NSYSDR200) (1)	105	110	111	126

LC1D40A…D80A, LC1DT60A and DT80A, LC1D80 and D95, LC1D40008 and D65008

On mounting rail AM1DL201 (width 75 mm) (2)
On mounting rail NSSDPR●● or NSYSDR200 (width 35 mm)

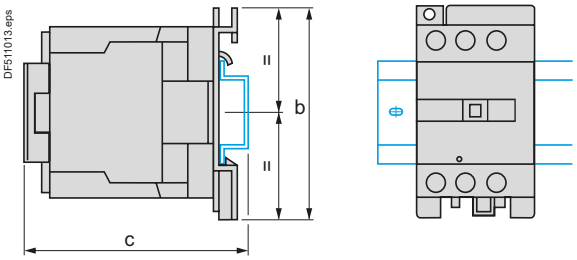

Control circuit: a.c.

LC1	D40A…D80A DT60A…DT80A	D80 and D95	D40008 and D65008
b	122	127	127
c	–	147	143
c (AM1DL201) (1)	–	137	133
c (NSSDPR●● or NSYSDR200 (1)	128	137	133

Control circuit: d.c.

LC1	D40A…D80A DT60A…DT80A	D80 and D95	D40008 and D65008
c	–	205	200
c (AM1DL201) (1)	–	195	190
c (NSSDPR●● or NSYSDR200) (1)	128	–	190

(1) With safety cover.
*(2) Except for **LC1D40A**…**D80A**, **LC1DT60A** and **DT80A**.*

LC1D80 and D95, LP1D80

On 2 mounting rails DZ5MB on 120 mm centres

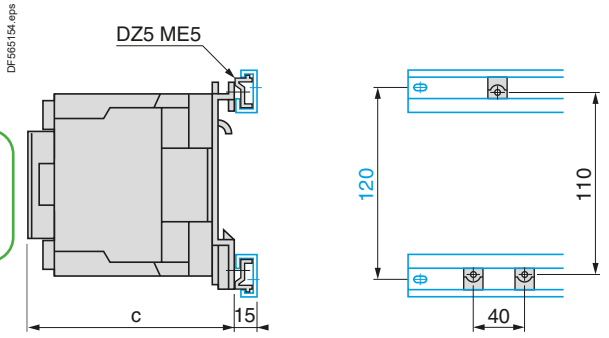

Control circuit: a.c.

LC1	D80 and D95
c with cover	130

Control circuit: d.c. (3)

LC1	D80 and D95
c with cover	186

LP1	D80
c	181

(3) Leave a 9 mm gap between 2 contactors if left on for more than 4 hours.

LC1D115, D150

On 2 mounting rails DZ5MB on 120 mm centres

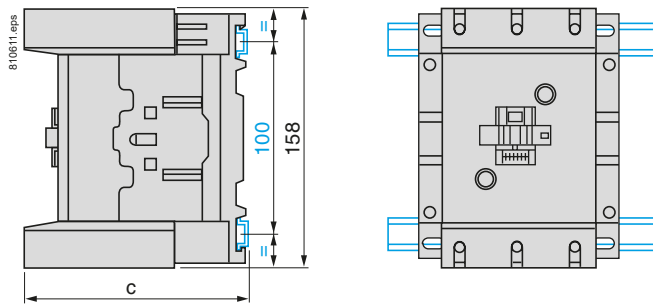

Control circuit: a.c. or d.c.

LC1	D115 and D150	D1156 and D1506
c (NSYSDR200BD or NSYSDR200BD)	134.5	117.5
c (NSYSDR200 or ED●●●)	142.5	125.5

References: pages B8/22 to B8/28
Characteristics: pages B8/80 to B8/87
Schemes: pages B8/101 and B8/102

LC1D09…D38 and LC1DT20…DT40

On 2 mounting rails DZ5MB

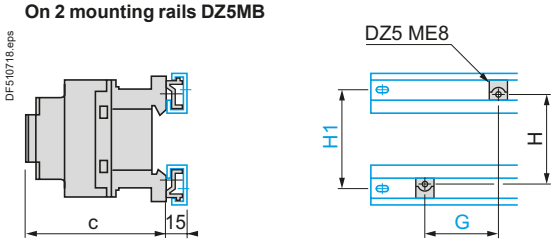

Control circuit:	a.c.		d.c.	
LC1	**D09…D18**	**D25…D38**	**D09…D18**	**D25…D38**
c with cover	86	92	95	101
G	35	35	35	35
H	60	60	70	70
H1	70	70	70	70
4-pole contactors				
LC1	**DT20 and DT25**	**DT32 and DT40**	**DT20 and DT25**	**DT32 and DT40**
c	92	100	101	109
G	35	35	35	35
H	60	60	70	70
H1	70	70	70	70

LC1D09…D38 and LC1DT20…DT40

On pre-slotted mounting plate AM1 PA, PB, PC

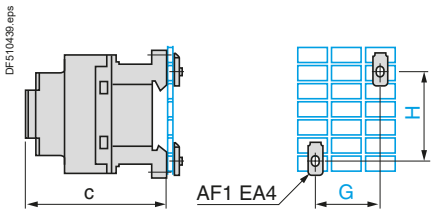

Control circuit:	a.c		d.c	
LC1	**D09…D18**	**D25…D38**	**D09…D18**	**D25…D38**
c with cover	86	92	95	101
G	35	35	35	35
H	60/70	60/70	70	70
LC1	**DT20 and DT25**	**DT32 and DT40**	**DT20 and DT25**	**DT32 and DT40**
c with cover	80	93	118	132
G	35	35	35	35
H	60	60	70	70

LC1D40A…D80A, LC1DT60A…DT80A

On pre-slotted mounting plate AM1 PA, PB, PC and panel mounted

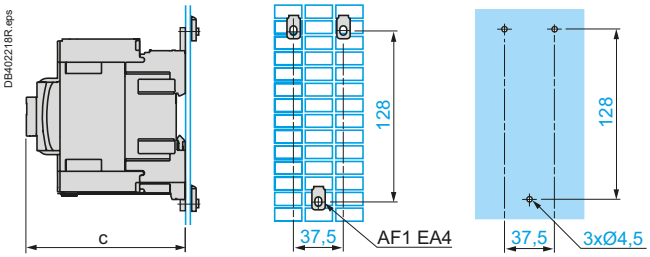

Control circuit:	a.c	d.c.
LC1	**D40A…D80A, DT60A…DT80A**	**D40A…65A, DT60A…DT80A**
c with cover	120	120

LC1D09…D38, LC1DT20…DT40

Panel mounted

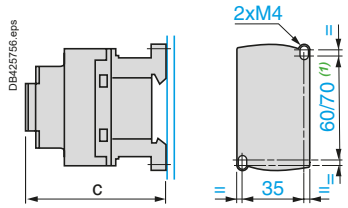

(1) for DC coil: 70 mm only.

Control circuit:	a.c		d.c	
LC1	**D09…D18**	**D25…D38**	**D09…D18**	**D25…D38**
c with cover	86	92	95	101
4-pole contactors				
LC1	**DT20 and DT25**	**DT32 and DT40**	**DT20 and DT25**	**DT32 and DT40**
c with cover	90	98	90	98

LC1D80 and D95, LC1D40008 and D65008, LP1D80

On pre-slotted mounting plate AM1 PA, PB, PC and panel mounted

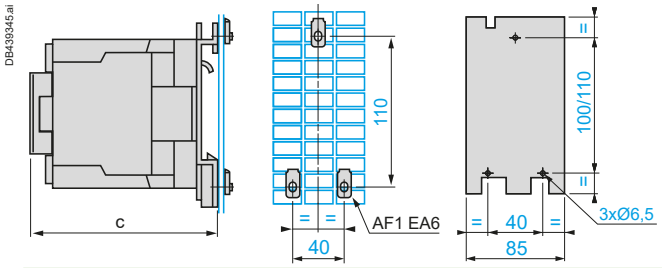

Control circuit:	a.c		d.c.
LC1	**D80 and D95, D40008 and D65008**		**D80 and D95 D40008 and D65008**
c with cover	130		186
LP1	–	–	**D80**
c without cover	–	–	181

LC1D115, D150

Panel mounted

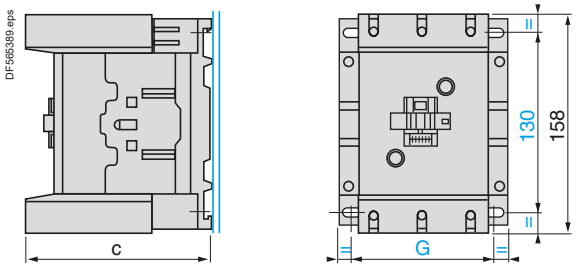

LC1	D115	D1156	D150	D1506
c	132	115	132	115
G (3-pole)	96/110	96/110	96/110	96/110
G (4-pole)	130/144	130/144	–	–

References:
pages B8/22 to B8/28

Characteristics:
pages B8/80 to B8/87

Schemes:
pages B8/101 and B8/102

Dimensions

LC1D09…D18 (3-pole), with AC/DC compatible coil

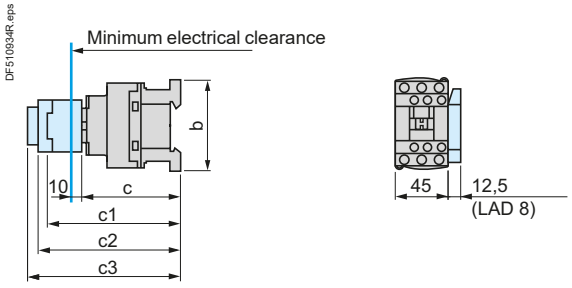

LC1D25…D38 (3-pole), with AC/DC compatible coil

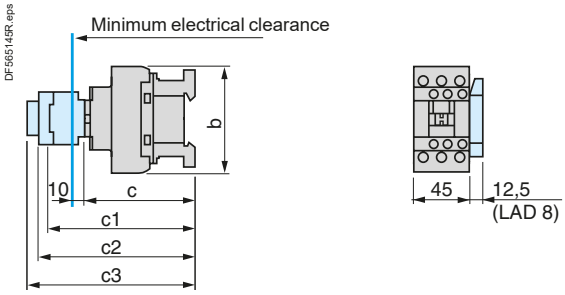

LC1		D09…D18	D25…D38
b	without add-on blocks	77	85
c	without cover or add-on blocks	84	90
	with cover, without add-on blocks	86	92
c1	with LADN or C (2 or 4 contacts)	117	123
c2	with LAD6K10	129	135
c3	with LADT, R, S	137	143
	with LADT, R, S and sealing cover	141	147

LC1D40A…D80A (3-pole), **LC1DT60A…DT80A** (4-pole), with AC/DC compatible coil

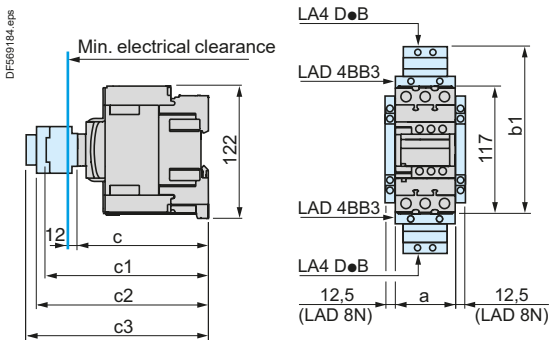

LC1		D40A…D80A	DT60A…DT80A
a		55	70
b1	LAD4BB3	136	–
	with LAD4DWB	166	–
c	without cover or add-on blocks	118	118
	with cover, without add-on blocks	120	120
c1	with LADN (1 contact)	–	–
	with LADN or C (2 or 4 contacts)	150	150
c2	with LAD6K10	163	163
c3	with LADT, R, S	171	171
	with LADT, R, S and sealing cover	175	175

Ref.
Contactors

References:
pages B8/18 to B8/21
Characteristics:
pages B8/80 to B8/87
Schemes:
pages B8/101 and B8/102

Mounting

LC1D09…D38 (3-pole),
with AC/DC compatible coil

On mounting rail NSYSDR200BD, NSYSDR200BD or NSYSDR200 (width 35 mm)

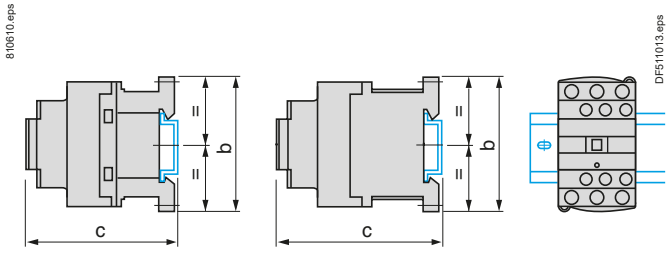

LC1	D09…D18	D25…D38
b	77	85
c (NSYSDR200BD or NSYSDR200BD)	88	94
c (NSYSDR200)	96	102

LC1D40A…D80A (3-pole), **LC1DT60A** and **DT80A** (4-pole),
with AC/DC compatible coil

On mounting rail AM1DL201 (width 75 mm) (2)
On mounting rail NSSDPR●● or NSYSDR200 (width 35 mm)

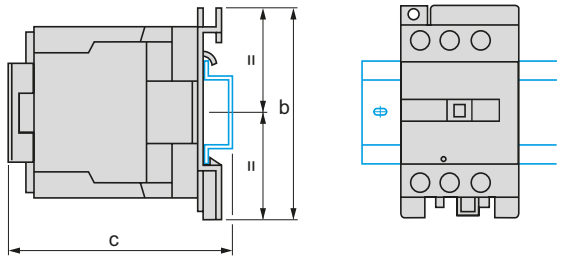

LC1	D40A…D80A DT60A…DT80A
b	122
c	–
c (AM1DL201)	–
c (NSSDPR●● or NSYSDR200)	128

Ref.
Contactors

References:
pages B8/18 to B8/21
Characteristics:
pages B8/80 to B8/87
Schemes:
pages B8/101 and B8/102

LC1D09…D38 (3-pole), with AC/DC compatible coil

On 2 mounting rails DZ5MB

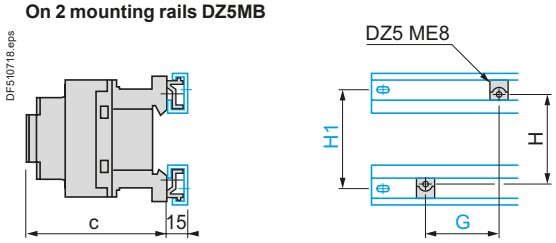

LC1	D09…D18	D25…D38
c with cover	86	92
G	35	35
H	60	60
H1	70	70

LC1D09…D38 (3-pole), with AC/DC compatible coil

On pre-slotted mounting plate AM1PA, PB, PC

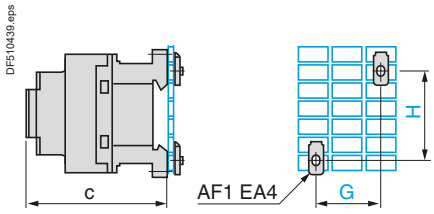

LC1	D09…D18	D25…D38
c with cover	86	92
G	35	35
H	60/70	60/70

LC1D09…D38 (3-pole), with AC/DC compatible coil

Panel mounted

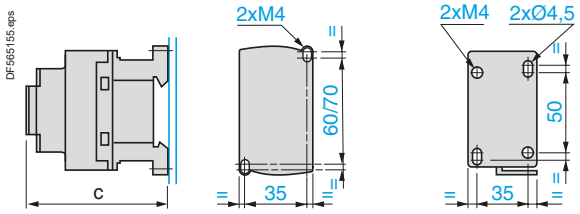

LC1	D09…D18	D25…D38
c with cover	86	92

LC1D40A…D80A (3-pole), **LC1DT60A…DT80A** (4-pole), with AC/DC compatible coil

On pre-slotted mounting plate AM1PA, PB, PC and panel mounted

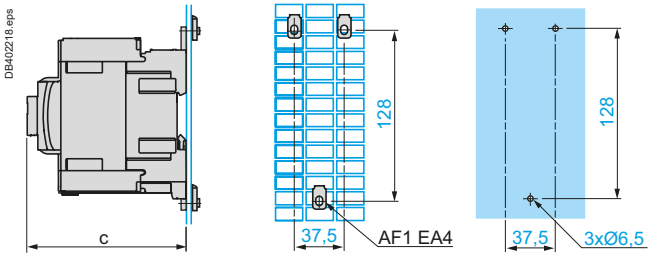

LC1	D40A…D80A , DT60A…DT80A
c with cover	120

Schemes

Contactors

Deca, Deca green 3-pole contactors (References: pages B8/22 to B8/25)

LC1D09 to D150

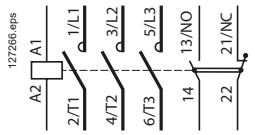

Deca 4-pole contactors (References: pages B8/26 and B8/27)

LC1DT20 to DT80A

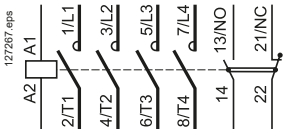

LC1D115004

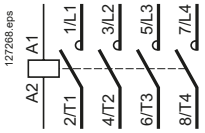

LC1D098 to D258

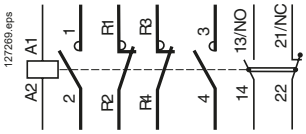

LC1 and LP1D40008 to D80008

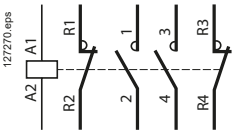

Front mounting add-on contact blocks

Instantaneous auxiliary contacts for Deca, Deca green contactors (References: page B8/36)

1 N/O LADN10 (1)

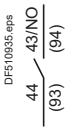

1 N/C LADN01 (1)

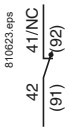

1 N/O + 1 N/C LADN11

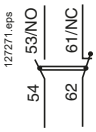

2 N/O LADN20

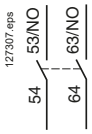

2 N/C LADN02

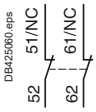

2 N/O + 2 N/C LADN22

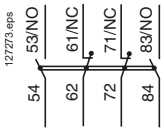

1 N/O + 3 N/C LADN13

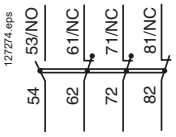

4 N/O LADN40

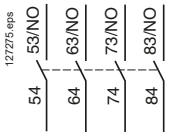

4 N/C LADN04

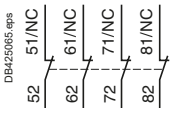

2 N/O + 2 N/C including 1 N/O + 1 N/C make before break LADC22

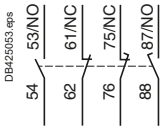

3 N/O + 1 N/C LADN31

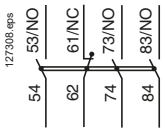

Instantaneous auxiliary contacts conforming to standard EN 50012 for Deca, Deca green contactors (References: page B8/36)

1 N/O + 1 N/C LADN11G

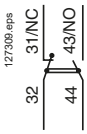

1 N/O + 1 N/C LADN11P

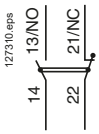

2 N/O + 2 N/C LADN22G

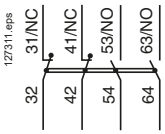

2 N/O + 2 N/C LADN22P

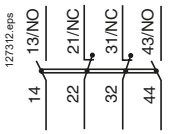

3 N/O + 1 N/C LADN31G

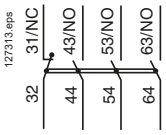

3 N/O + 1 N/C LADN31P

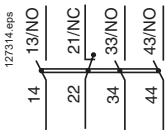

1 N/O + 3 N/C LADN13G

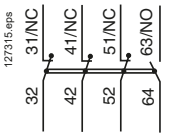

1 N/O + 3 N/C LADN13P

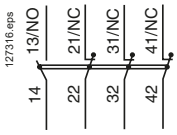

(1) Items in brackets refer to blocks mounted on right-hand side of contactor.

References:
pages B8/22 to B8/40

Characteristics:
pages B8/80 to B8/93

Dimensions:
pages B8/94 to B8/100

Front mounting add-on contact blocks for Deca, Deca green contactors

Dust and damp protected instantaneous auxiliary contacts (References: page B8/36)

2 N/O (24-50 V) LA1DX20	2 N/C (24-50 V) LA1DX02	2 N/O (5-24V) with 2 cable screen terminals LA1DY20	2 N/O protected (24-50 V) 2 N/O standard LA1DZ40	2 N/O protected (24-50 V) + 1 N/O + 1 N/C standard LA1DZ31

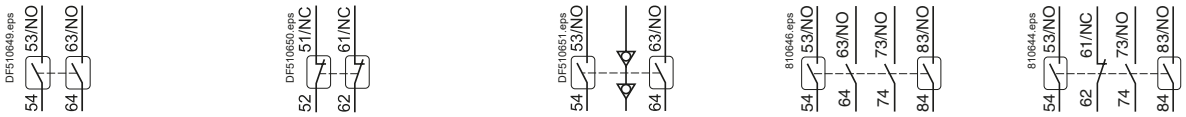

Time delay auxiliary contacts (References: page B8/37)

On-delay 1 N/O + 1 N/C LADT	Off-delay 1 N/O + 1 N/C LADR	On-delay 1 N/C + 1 N/O break before make LADS

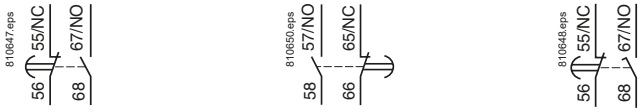

Mechanical latch blocks for Deca, Deca green contactors (References: page B8/37)

LAD6K10 and LA6DK20

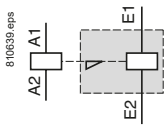

Side mounting add-on contact blocks for Deca, Deca green contactors

Instantaneous auxiliary contacts (References: page B8/36)

1 N/O + 1 N/C LAD8N11 (1)	2 N/O LAD8N20 (1)	2 N/C LAD8N02 (1)

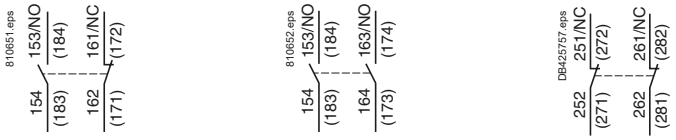

(1) Items in brackets refer to blocks mounted on right-hand side of contactor.

Electronic serial timer modules for Deca, Deca green contactors

On-delay LA4DT●U

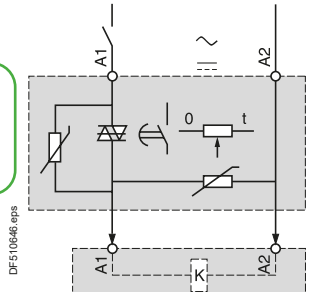

Interface modules

Relay output for Deca contactors
LA4DFB

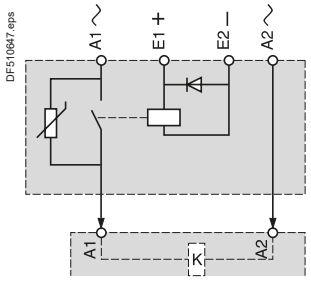

Solid state for Deca, Deca green contactors
LA4DWB

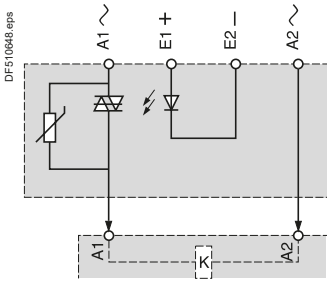

References: page B8/85.

References:
pages B8/36 to B8/40
Characteristics:
pages B8/88 to B8/92
Dimensions:
pages B8/94 and B8/95, B8/98

Dimensions

LC2D09 to D38 Deca, Deca green contactors

2 x **LC1D09 to D38**

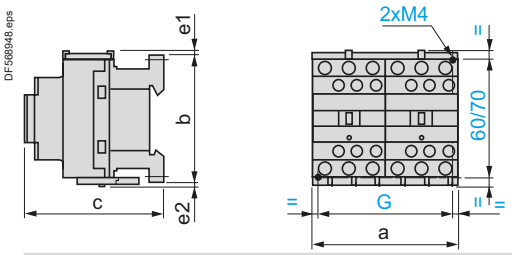

LC2 or 2 x **LC1**	**a**	**b**	**c** (1)	**e1**	**e2**	**G**
D09 to D18 AC, AC/DC	90	77	86	4	1.5	**80**
D093 to D123 AC	90	99	86	–	–	**80**
D09 to D18 DC	90	77	95	4	1.5	**80**
D093 to D123 DC	90	99	95	–	–	**80**
D25 to D38 AC, AC/DC	90	85	92	9	5	**80**
D183 to D383 AC	90	99	92	–	–	**80**
D25 to D32 DC	90	85	101	9	5	**80**
D183 to D383 DC	90	99	101	–	–	**80**

e1 and e2: including cabling.

(1) With safety cover, without add-on block.

LC2DT20 to DT40 Deca contactors

2 x **LC1DT20 to DT40**

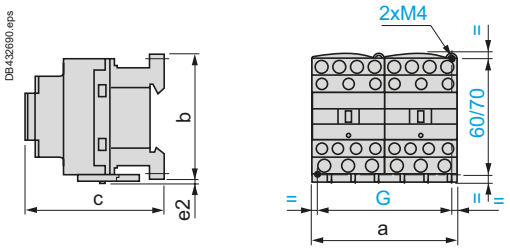

LC2 or 2 x **LC1**	**a**	**b**	**c**	**G**	**e2**
DT20 and DT25 AC	90	85	92	**80**	20
DT32 and DT40 AC	90	91	99	**80**	22
DT20 and DT25 DC	90	85	102	**80**	20
DT32 and DT40 DC	90	91	109	**80**	22

c, e: including cabling.

LC2D40A to D80A for Deca, Deca green contactors

2 x **LC1D40A to D80A**

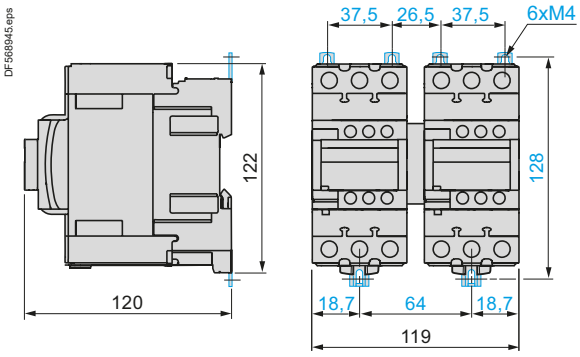

Ref.
Contactors

Dimensions

LC2D80 and D95

2 x **LC1D80 and D95** ~

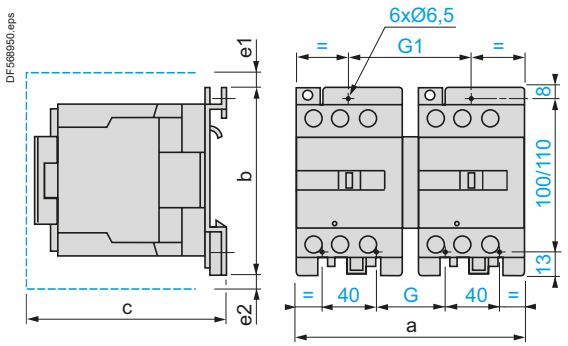

LC2 or 2 x **LC1**	**a**	**b**	**c**	**e1**	**e2**	**G**	**G1**
D80 and D95 ~	182	127	158	13	–	**56**	**96**
D80004 ~	207	127	158	–	20	**71**	**111**

c, e1 and e2: including cabling.

2 x **LC1D80 and D95** ⎓

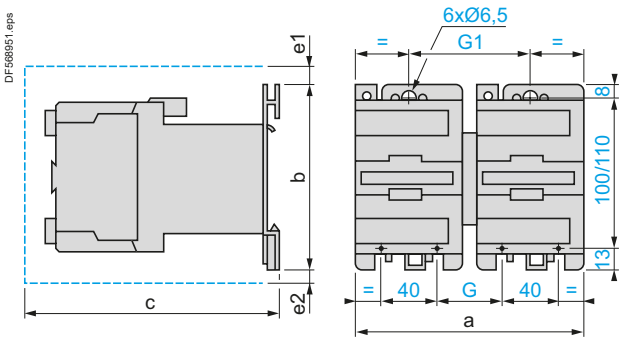

2 x **LC1**	**a**	**b**	**c**	**e1**	**e2**	**G**	**G1**
D80 and D95	182	127	215	13	20	**56**	**96**

c, e1 and e2: including cabling.

LC2D115 and D150

2 x **LC1D115 and D150**

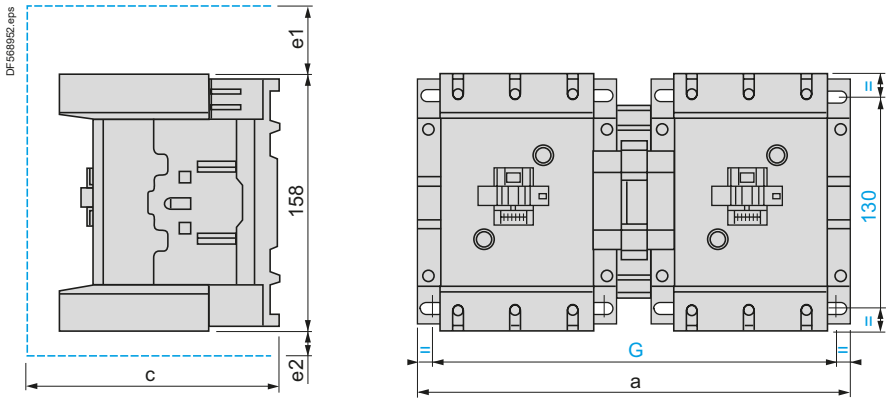

LC2 or 2 x **LC1**	**a**	**c**	**e1**	**e2**	**G**
D115 and D150	266	148	56	18	**242/256**
D115004	334	148	–	60	**310/324**

c, e1 and e2: including cabling.

Ref.
Contactors

Schemes

Reversing contactors for motor control

LC2D09...D80A Deca, Deca green contactors LC2D80...D150 Deca contactor

Horizontally mounted

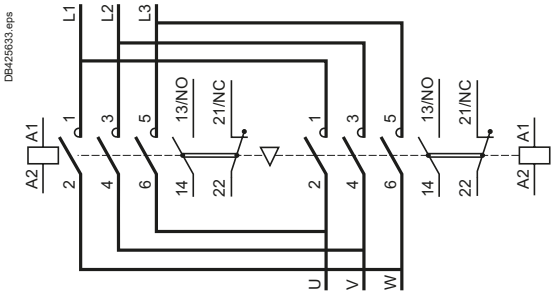

LAD9R1V D, Deca green contactors

With integral electrical interlocking

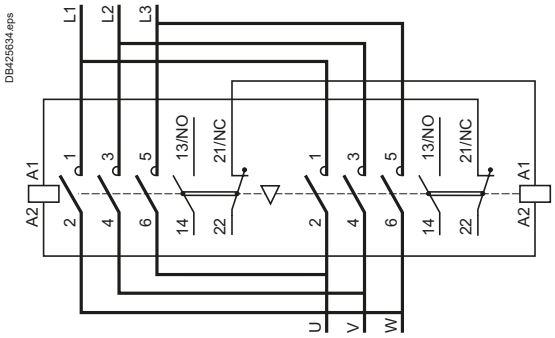

Changeover contactor pairs Deca contactors

LC2DT20...DT40

Horizontally mounted

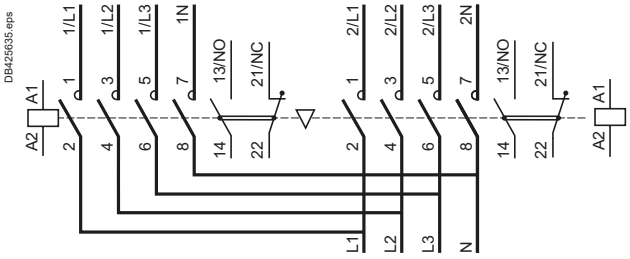

LADT9R1V

With integral electrical interlocking

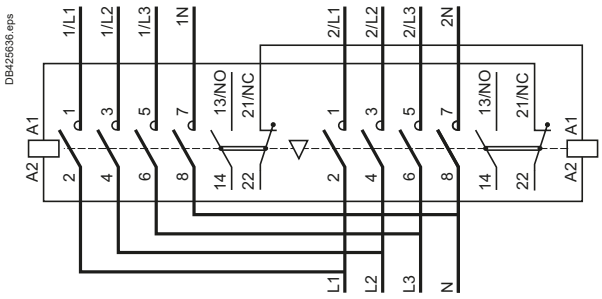

Ref.
Contactors

References:
pages B8/29 to B8/32
Characteristics:
pages B8/80 to B8/87
Dimensions:
pages B8/103 to B8/104

Schemes

Electrical interlocking of Deca, Deca green reversing contactors fitted with:

Mechanical interlock with integral electrical contacts
LA9D4002, LA9D8002 and LA9D11502

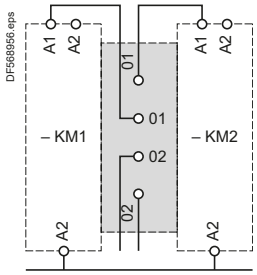

Mechanical interlock without integral electrical contacts
LAD9V2, LAD4CM, LA9D50978 and LA9D80978

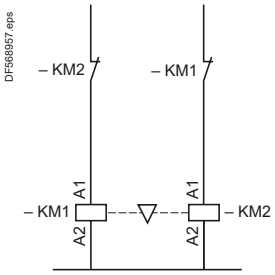

Low speed - High speed cabling kit, screw clamp terminals for LC1D09... D38 contactors (Deca, Deca green)

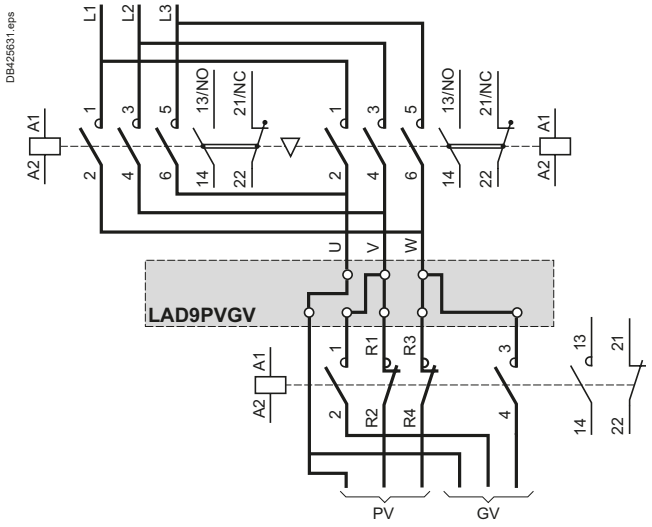

Low speed - High speed cabling kit, spring terminals for LC1D09... D38 contactors (Deca)

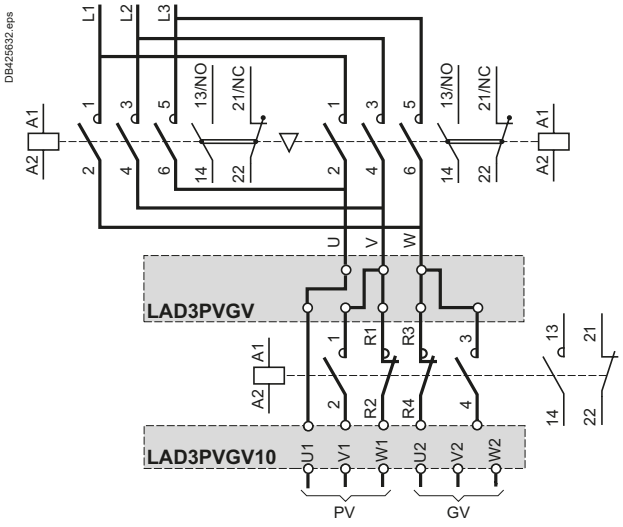

Ref.
Contactors

Dimensions and scheme

Dimensions

LC1DFK

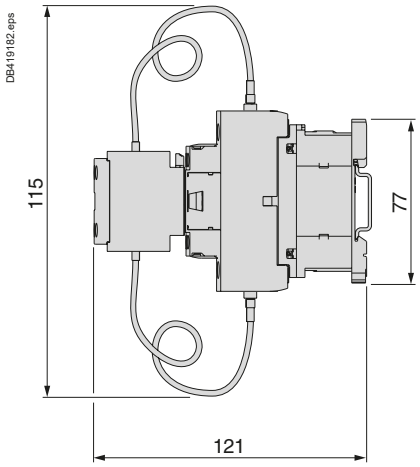

LC1DGK, DLK, DMK

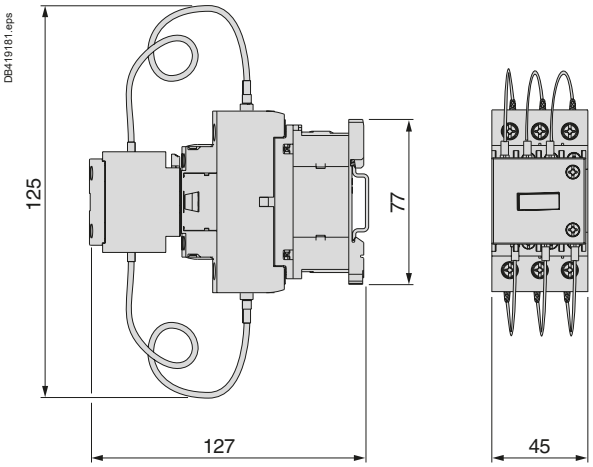

LC1DPK, DTK

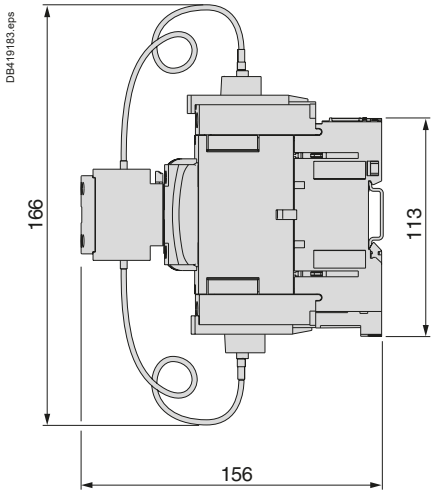

LC1DWK

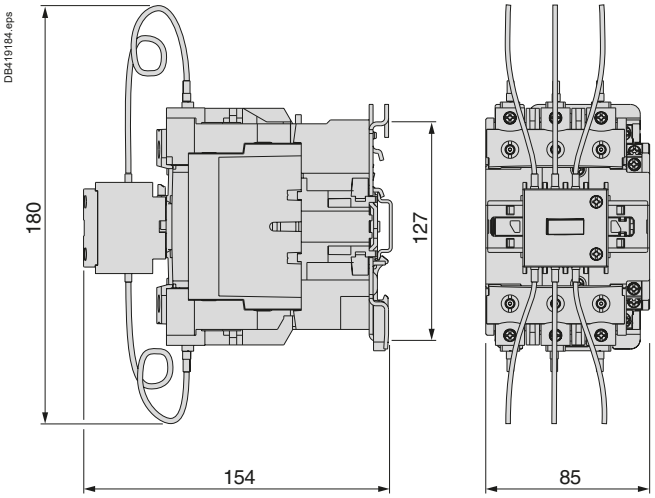

Scheme

LC1D●K

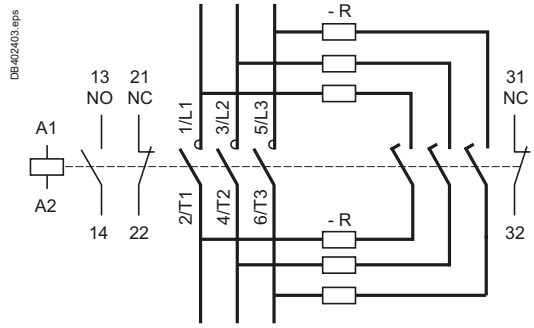

R = Pre-wired resistor connections.

References:
page B8/34



GC25

Modular contactors are designed for use in modular panels and enclosures.
These contactors feature:

■ **Easy installation:**
□ quick clip-on fixing and locking onto 35 mm omega rail
□ easy connection by means of ready-to-tighten, captive, pozidrive screw terminals.
■ **Compact size:**
All units have a common depth of 60 mm and width in modules of 17.5 mm (width of one module: 17.5 mm).

■ **User safety:**
□ use of materials conforming to strictest fire safety standards
□ live parts protected against direct finger contact
□ completely safe operation
□ state indication on front panel.

Standards

This range of modular contactors has been designed taking into account the requirements of international standard IEC 61095.
This standard is specific to “Electromagnetic contactors for domestic and similar use”.
It has very strict requirements, meeting the expectations of users, with regard to the safety of equipment and persons in “premises and areas accessible to the public”.
Conformity with this standard makes it possible to obtain the following quality labels without the need for additional tests: NF-USE, VDE, CEBEC, etc.

Applications

Modular contactors are designed for switching all single-phase, 3-phase or 4-phase loads up to 100 A.

Power switching

These contactors have multiple applications in industrial, agricultural and commercial premises, hospitals and the home, i.e. wherever switching of a specific supply is required:
■ lighting
■ heating
■ ventilation
■ motorised shutters or gates.

References:
page B8/51
Dimensions, schemes:
pages B8/115 to B8/117

Characteristics

Environment

Contactor type			GC16	GC25	GC40	GC63	GC100
Rated insulation voltage (Ui)	Conforming to IEC 61095	V	500				
	Conforming to VDE 0110	V	500				
Rated impulse withstand voltage (Uimp)		kV	4 in enclosure				
Conforming to standards			IEC 61095 and IEC 60947-5-1 for auxiliary contacts				
Degree of protection	Conforming to IEC 60529		Protection against direct finger contact (IP 20 open, IP 40 in enclosure)				
Ambient air temperature around the device	Storage	°C	-40…+70				
	Operation	°C	-5…+50 (0.85…1.1 Uc)				
Maximum operating altitude	Without derating	m	3000				
Operating positions	Without derating		±30° in relation to normal vertical mounting plane				
Shock resistance 1/2 sine wave = 10 ms Conforming to IEC/EN 60068-2-27	Contactor open		10 gn				
	Contactor closed		15 gn				
Vibration resistance 5…300 Hz Conforming to IEC/EN 60068-2-6	Contactor open		2 gn				
	Contactor closed		3 gn				
Flame resistance			Conforming to IEC 61095				

Pole characteristics

Number of poles			2, 3 or 4				
Rated operational current (Ie) (Ue ≤ 440 V)	In AC-7a (heating)	A	16	25	40	63	100
	In AC-7b (motor control)	A	5	8.5	15	25	–
Contactor rating	40 °C	A	16	25	40	63	100
	50 °C	A	14	22	36	57	87
	60 °C (1)	A	13	20	32	50	80
Rated operational voltage (Ue)	Up to	V	250 two-pole contactors, 415 three and four-pole contactors				
Frequency limits	Of the operating current	Hz	400				
Conventional thermal current (Ith)	θ ≤ 50 °C	A	16	25	40	63	100
Rated breaking and making capacity	Conforming to IEC 61095 (AC-7b) I rms 400 V 3-phase	A	40	68	120	200	–
Permissible short time rating no current flowing for preceding 15 minutes with q ≤ 40 °C	For 10 s	A	128	200	320	504	800
	For 30 s	A	40	62	100	157	250
Short-circuit protection by fuse or circuit breaker U ≤ 440 V	gl fuse	A	16	25	40	63	100
	Circuit breaker I^2t (at 3 kA rms prospective) 230 V	A^2s	5000	10000	16000	18000	–
	Circuit breaker I^2t (at 3 kA rms prospective) 400 V	A^2s	9000	14000	17500	20000	–
Electrical durability in operating cycles	AC-7a, AC-7b		100000	100000	100000	100000	30000
Average impedance per pole	At Ith and 50 Hz	mΩ	2.5	2.5	2	2	1
Power dissipated per pole	For the above operational currents	W	0.65	1.6	3.2	8	10
Maximum cabling c.s.a. Flexible cable without cable end	1 conductor	mm^2	6	6	25	25	35
	2 conductors	mm^2	4	4	16	16	–
Flexible cable with cable end	1 conductor	mm^2	6	6	16	16	35
	2 conductors	mm^2	1.5	1.5	4	4	–
Solid cable without cable end	1 conductor	mm^2	6	6	25	25	35
	2 conductors	mm^2	4	4	6	6	10
Tightening torque	Power circuit connections	N.m	0.8	0.8	3.5	3.5	3.5

(1) Ventilation 1/2 module must be fitted.

References: page B8/51
Dimensions, schemes: pages B8/115 to B8/117

Characteristics

Control circuit characteristics

Contactor type				GC16, GC25 single or 2-pole	GC16, GC25 3 or 4-pole **GC40, GC63** 2-pole	GC40, GC63 3 or 4-pole **GC100** 2-pole	GC100 4-pole
Rated control circuit voltage (Uc)		50 or 60 Hz	**V**	12…240 V, for other voltages, please consult your Regional Sales Office			
Control voltage limits (θ ≤ 50 °C)	50 Hz coils	Operational		0.85…1.1 Uc			
		Drop-out		0.2…0.75 Uc			
Average coil consumption at 20 °C and at Uc	∼ 50 Hz	Inrush	**VA**	15	34	53	106
		Sealed	**VA**	3.8	4.6	6.5	13
Maximum heat dissipation		50/60 Hz	**W**	1.3	1.6	2.1	4.2
Operating time		Closing "C"	**ms**	10…30			
		Opening "O"	**ms**	10…25			
Mechanical durability		In operating cycles		10^6			
Maximum operating rate at ambient temperature ≤ 50 °C		In operating cycles per hour		300			
Maximum cabling c.s.a.	Flexible cable without cable end	1 or 2 conductors	**mm²**	2.5			
	Flexible cable with cable end	1 conductor	**mm²**	2.5			
		2 conductors	**mm²**	1.5			
	Solid cable without cable end	1 or 2 conductors	**mm²**	1.5			
Tightening torque			**N.m**	0.8			

Instantaneous auxiliary contact characteristics

Rated operational voltage (Ue)	Up to	**V**	250
Rated insulation voltage (Ui)	Conforming to IEC 60947-5	**V**	500
	Conforming to VDE 0110	**V**	500
Conventional thermal current (Ith)	For ambient θ ≤ 50 °C	**A**	5
Mechanical durability	Operating cycles		10^6
Maximum cabling c.s.a.	Flexible or solid conductor	**mm²**	2.5
Tightening torque		**N.m**	0.8

Ref.
Contactors

References: page B8/51
Dimensions, schemes: pages B8/115 to B8/117

Characteristics in lighting applications

Lighting (Maximum number of lamps depending on the power of each unit) Introduction of installations according to type of supply

■ Single-phase circuit, 230 V



■ 3-phase circuit, 230 V

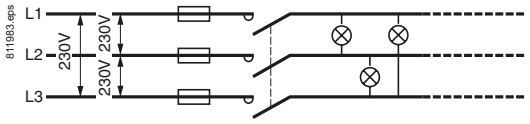

The maximum number of lamps which can be operated per phase is equal to the number of lamps in the "single phase 230 V" table divided by $\sqrt{3}$.

■ 3-phase circuit, 400 V (with neutral)

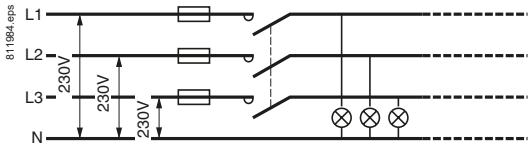

The maximum number of lamps which can be operated per phase is equal to the total number of lamps in the "single-phase 230 V" table.

Contactor rating for a single-phase 230 V circuit (single-pole)

Fluorescent lamps with starter

Single fitting	Non corrected					With parallel correction					Contactor rating
P (W)	20	40	50	80	110	20	40	58	80	110	–
I_B (A)	0.39	0.43	0.70	0.80	1.2	0.19	0.29	0.46	0.57	0.79	–
C (µF)	–	–	–	–	–	5	5	7	7	16	–
Maximum number of lamps	22	20	13	10	7	15	15	10	10	5	**16 A**
	30	28	17	15	10	20	20	15	15	7	**25 A**
	70	60	35	30	20	40	40	30	30	14	**40 A**
	100	90	56	48	32	60	60	43	43	20	**63 A**
Twin fitting	**Non corrected**					**With series correction**					**Contactor rating**
P (W)	2 x 18	2 x 36	2 x 58	2 x 80	2 x 140	2 x 18	2 x 36	2 x 58	2 x 80	2 x 140	–
I_B (A)	0.44	0.82	1.34	1.64	2.2	0.26	0.48	0.78	0.96	1.3	–
C (µF)	–	–	–	–	–	3.5	4.5	7	9	18	–
Maximum number of lamps	20	11	7	5	4	30	17	10	9	6	**16 A**
	30	16	10	8	6	46	25	16	13	10	**25 A**
	50	26	16	13	10	80	43	27	22	16	**40 A**
	75	42	25	21	16	123	67	42	34	25	**63 A**

High pressure mercury vapour lamps

	Non corrected						With parallel correction							Contactor rating
P (W)	50	80	125	250	400	700	50	80	125	250	400	700	1000	–
I_B (A)	0.6	0.8	1.15	2.15	3.25	5.4	0.35	0.50	0.7	1.5	2.4	4	5.7	–
C (µF)	–	–	–	–	–	–	7	8	10	18	25	40	60	–
Maximum number of lamps	15	10	8	4	2	1	10	9	9	4	3	2	–	**16 A**
	20	15	10	6	4	2	15	13	10	6	4	2	1	**25 A**
	34	27	20	10	6	4	28	25	20	11	8	5	3	**40 A**
	53	40	28	15	10	6	43	38	30	17	12	7	5	**63 A**

I_B: value of current drawn by each lamp at its rated voltage.
***C**: unit capacitance for each lamp.*
*I_B and **C** correspond to values normally quoted by lamp manufacturers*

Ref.
Contactors

References: page B8/51
Dimensions, schemes: pages B8/115 to B8/117

Characteristics in lighting applications

Contactor rating for a single-phase 230 V circuit (single-pole) (continued)

Low pressure sodium vapour lamps

	Non corrected						With parallel correction						Contactor rating
P (W)	18	35	55	90	135	180	18	35	55	90	135	180	–
I_B (A)	0.35	1.4	1.4	2.1	3.1	3.1	0.35	0.6	0.6	0.9	0.9	0.9	–
C (µF)	–	–	–	–	–	–	5	20	20	26	45	40	–
Maximum number of lamps	18	4	5	3	2	2	14	3	3	2	1	1	**16 A**
	34	9	9	6	4	4	21	5	5	4	2	2	**25 A**
	57	14	14	9	6	6	40	10	10	8	4	5	**40 A**
	91	24	24	19	10	10	60	15	15	11	6	7	**63 A**

High pressure sodium vapour lamps

	Non corrected					With parallel correction					Contactor rating
P (W)	70	150	250	400	1000	70	150	250	400	1000	–
I_B (A)	1	1.8	3	4.4	10.3	0.6	0.7	1.5	2.5	6	–
C (µF)	–	–	–	–	–	12	20	32	45	100	–
Maximum number of lamps	8	4	2	1	–	6	6	2	2	1	**16 A**
	12	7	4	3	1	9	9	3	4	2	**25 A**
	20	13	8	5	2	18	18	6	8	4	**40 A**
	32	18	11	8	3	25	25	9	12	6	**63 A**

Metal iodine or halogen vapour lamps

	Non corrected						With parallel correction							Contactor rating
P (W)	35	70	150	250	400	1000	39	70	150	250	400	1000	2000	–
I_B (A)	0.3	0.5	1	1.5	2.5	6	0.3	0.5	1	1.5	2.5	6	5.5	–
C (µF)	–	–	–	–	–	–	6	12	20	32	45	85	60	–
Maximum number of lamps	27	16	8	5	3	1	12	6	4	3	2	–	1	**16 A**
	40	24	12	8	5	2	18	9	6	4	3	1	2	**25 A**
	68	42	20	14	8	4	31	16	10	7	5	3	3	**40 A**
	106	64	32	21	13	5	50	25	15	10	7	4	5	**63 A**

Incandescent and halogen lamps

									Contactor rating
P (W)	60	75	100	150	200	300	500	1000	–
I_B (A)	0.26	0.32	0.44	0.65	0.87	1.3	2.17	4.4	–
Maximum number of lamps	30	25	19	12	10	7	4	2	**16 A**
	45	38	28	18	14	10	6	3	**25 A**
	85	70	50	35	26	18	10	6	**40 A**
	125	100	73	50	37	25	15	8	**63 A**

Halogen lamps used with transformer

					Contactor rating
P (W)	60	80	105	150	–
I_B (A)	0.26	0.35	0.45	0.65	–
Maximum of lamps	9	8	6	4	**16 A**
	14	12	9	6	**25 A**
	27	23	18	13	**40 A**
	40	35	27	19	**63 A**

I_B *value of current drawn by each lamp at its rated voltage.*
C*: unit capacitance for each lamp.*
I_B *and* ***C*** *correspond to values normally quoted by lamp manufacturers*

Ref.
Contactors

Characteristics in heating applications

Heating (AC-7a)

Single-phase, 2-pole switching

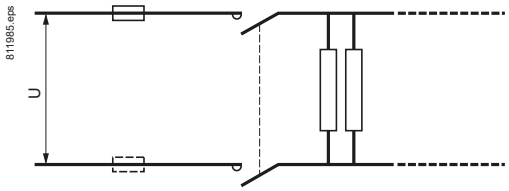

3-phase switching

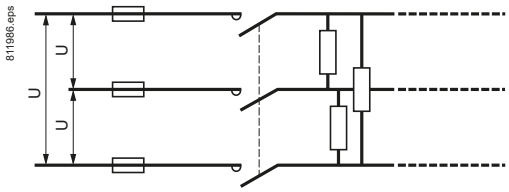

Heating by resistive elements or by infra-red radiators, convectors or radiators, heating ducts, industrial furnaces. The current peak between the hot and cold states must not exceed 2 to 3 In at the moment of switch-on.

Contactor selection according to power and required electrical life

Electrical durability (in operating cycles)	Maximum power (kW)					Contactor rating
	100 x 10^3	150 x 10^3	200 x 10^3	500 x 10^3	10^6	
Single-phase switching 230 V (2-pole)	3.5	3	2.2	1	0.8	**16 A**
	5.4	4.6	3.5	1.6	1.2	**25 A**
	8.6	7.4	5.6	2.6	1.9	**40 A**
	13.6	11.6	8.8	4	3	**63 A**
	21.6	18.4	14	6.4	4.8	**100 A**
3-phase switching 400 V (3-pole)	10	9	6.5	3.2	2.2	**16 A**
	16	14	10	5	3.5	**25 A**
	26	22	17	7.5	6	**40 A**
	41	35	26.5	12	9	**63 A**
	64.8	55.2	42	19.2	14.4	**100 A**

Ref.
Contactors

References:
page B8/51

Dimensions, schemes:
pages B8/115 to B8/117

Characteristics in motor control applications

Motor control (AC-7b)

Single-phase circuit, 230 V

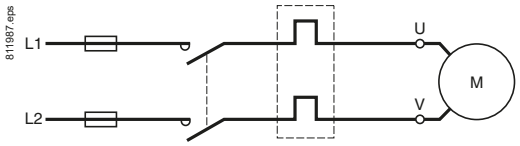

3-phase circuit, 400 V

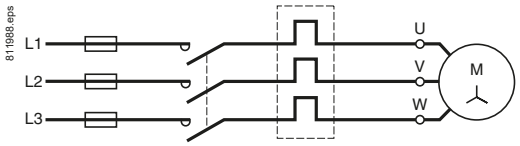

Contactor selection according to maximum power in kW

230 V single-phase capacitor motor (2-pole)	**400 V 3-phase motor**	**Contactor rating** (Ith)
0.55	2.2	**16 A**
1.1	4	**25 A**
2.2	7.5	**40 A**
4	11	**63 A**

Ref.

Contactors

Dimensions

Dimensions

Contactors

Common side view	GC1610, 1611, 1620 GC2502, 2510, 2511, 2520	GC1622, 1640 GC2504, 2522, 2530, 2540
	1 module	2 modules

DB417023.eps

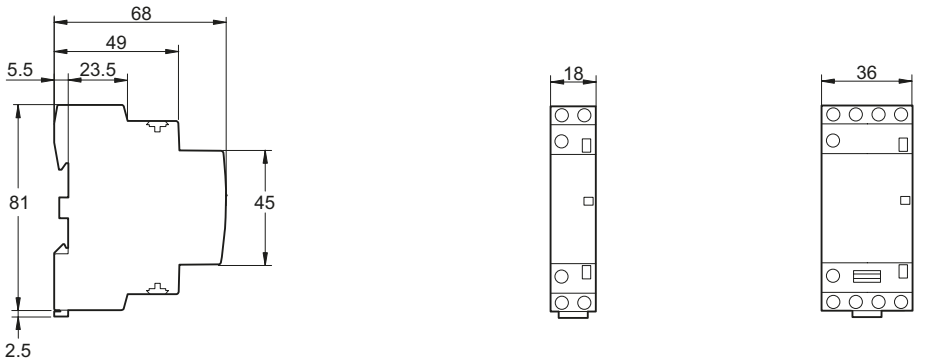

Common side view	GC4002, 4011, 4020 GC6302, 6311, 6320	GC4004, 4022, 4030, 4040 GC6304, 6322, 6330, 6340
	2 modules	3 modules

DB417024.eps

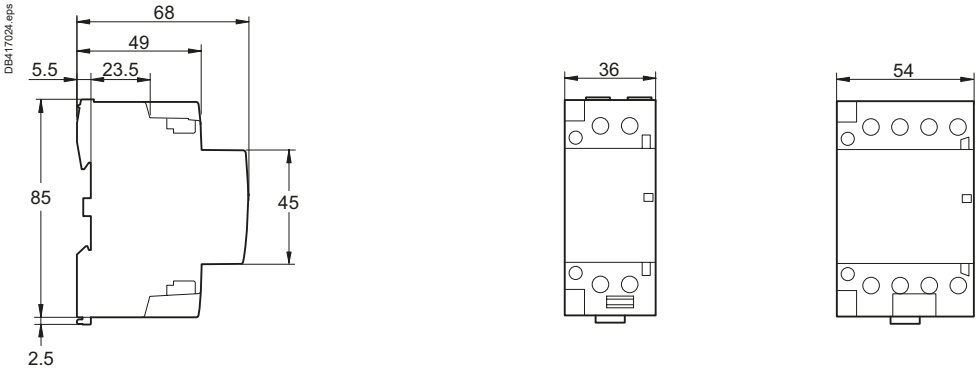

Common side view	GC10020	GC10040
	3 modules	6 modules

DB417025.eps

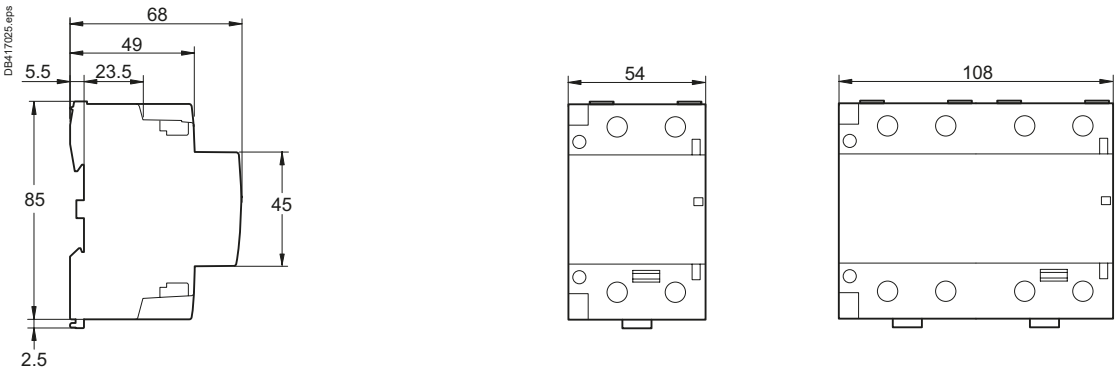

References:
page B8/51

Characteristics:
pages B8/108 to B8/114

Schemes:
page B8/117

Dimensions and mounting

Dimensions

Auxiliary contacts
GAC0511, 0531 and 0521

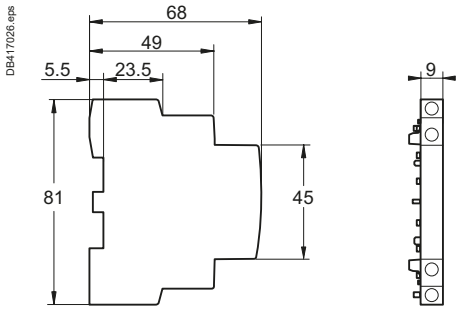

Coil suppression blocks
GAP21 and 23

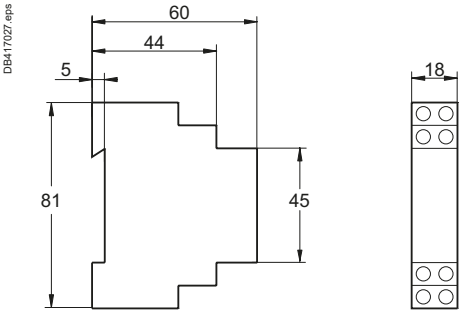

Clip-on ventilation 1/2 module
GAC5

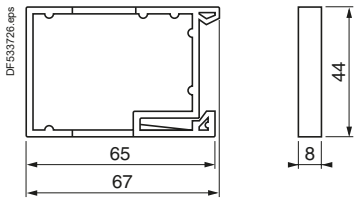

Mounting

Setting-up precautions

The contactor controls must be bounce free. If not, connect a coil suppression block **1** (GAP21 or 23) across the coil terminals y 250 V. When several contactors which operate at the same time are mounted side by side, a GAC 5 ventilation 1/2 module **2** must be fitted every 2 contactors.

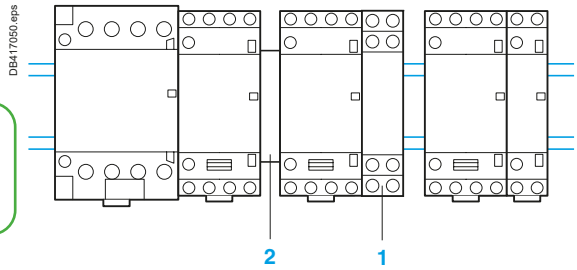

It is advisable to mount electronic units at the bottom of the modular panel and to separate them from electromechanical units by a space **3** equal to one module, or by 2 ventilation 1/2 modules (GAC 5).

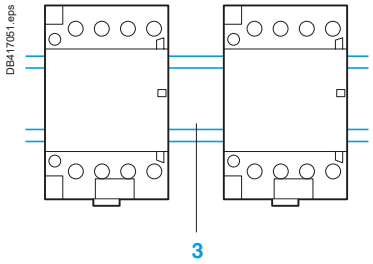

Ref.
Contactors

Schemes

Schemes

Contactors

GC●●10

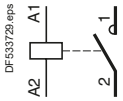

GC●●20

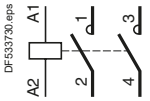

GC●●30

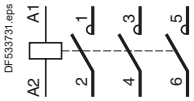

GC●●40

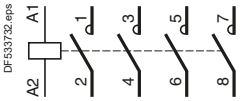

GC●●11

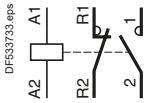

GC●●22

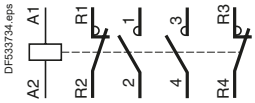

GC●●02

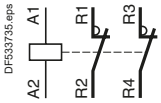

GC●●04

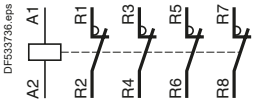

Auxiliary contacts

GAC0521

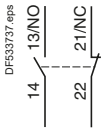

GAC0531

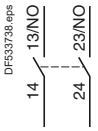

GAC0511



Ref.
Contactors

Characteristics

PB113083_13.eps



GY25

Modular "dual tariff" contactors are designed for use in modular panels and enclosures.
These contactors feature:
■ **Easy installation:**
□ quick clip-on fixing and locking onto 35 mm omega rail
□ easy connection by means of ready-to-tighten captive, pozidrive screw terminals.
■ **Compact size**
All units have a common depth of 60 mm and width in modules of 17.5 mm (width of one module: 17.5 mm).
■ **User safety:**
□ use of materials conforming to strictest fire safety standards
□ live parts protected against direct finger contact
□ completely safe operation
□ state indication on front panel.
"Dual tariff" contactors are designed for use with Electricity Supply Authority dual tariffs.
They have a 4-position selector switch on the front panel:

"Stop" (O)	For switching off the load, e.g. for prolonged periods of absence.
"Off peak" Automatic start (A)	The contactor switches automatically during "off peak" hours as set by the Supply Authority remote control and thus supplies the load, (washing machine, dishwasher, convector heater, water heater) during this period, at an economy rate to the user.
"Peak time" Manual start (I)	In this position, the contactor supplies the load to cater for additional requirements for hot water, heating, etc., but at the standard rate. The contactor returns automatically to the "off-peak" position at the start of the "off-peak" period.
"Peak time" Manual override with lock	Facility for setting the contactor to continuous manual operation, ignoring the automation system and the Supply Authority control; setting and locking is achieved by means of a tool, with manual return to the "AUTO" position.

Standards

This range of modular contactors has been designed taking into account the requirements of international standard IEC 61095.
This standard is specific to "Electromagnetic contactors for domestic and similar use".
It has very strict requirements, meeting the expectations of users, with regard to the safety of equipment and persons in "premises and areas accessible to the public".
Conformity with this standard makes it possible to obtain the following quality labels without the need for additional tests: NF-USE, VDE, CEBEC, etc.

"Dual tariff" modular contactors are designed for switching all single-phase, 3-phase or 4-phase loads up to 63 A.

Modular contactors have multiple applications in industrial, agricultural and commercial premises, hospitals and the home, i.e. wherever switching of a specific supply is required:
■ lighting,
■ heating, ventilation,
■ motorised shutters or gates.

Characteristics

Environment

Type			GY16	GY25	GY40	GY63
Rated insulation voltage (Ui)	Conforming to IEC 61095	V	500			
	Conforming to VDE 0110	V	500			
Rated impulse withstand voltage (Uimp)		kV	4 in enclosure			
Conforming to standards			IEC 61095 and IEC 60947-5-1 for auxiliary contacts			
Product certifications			NF-USE, VDE, CEBEC, ÖVE			
Degree of protection	Conforming to IEC 60529		Protection against direct finger contact IP 20 open, IP 40 in enclosure			
Ambient air temperature around the device	Storage	°C	-40…+70			
	Operation	°C	-5…+50 (0.85…1.1 Uc)			
Maximum operating altitude	Without derating	m	3000			
Operating positions	Without derating		±30° in relation to normal vertical mounting plane			
Shock resistance 1/2 sine wave = 11 ms Conforming to IEC/EN 60068-2-27	Contactor open		10 gn			
	Contactor closed		15 gn			
Vibration resistance 5…300 Hz Conforming to IEC/EN 60068-2-6	Contactor open		2 gn			
	Contactor closed		3 gn			
Flame resistance			Conforming to IEC 61095			

Pole characteristics

Number of poles			2, 3 or 4			
Rated operational current (Ie) (Ue ≤ 440 V)	In AC-7a (heating)	A	16	25	40	63
	In AC-7b (motor control)	A	5	8.5	15	25
Contactor rating	40 °C		16	25	40	63
	50 °C		14	22	36	57
	60 °C (1)		13	20	32	50
Rated operational voltage (Ue)	Up to	V	250 - 2-pole contactors, 415 - 3 and 4-pole contactors			
Frequency limits	Of the operating current	Hz	400			
Conventional thermal current (Ith)	θ ≤ 50 °C	A	16	25	40	63
Rated breaking and making capacity	Conforming to IEC 61095 (AC-7b) I rms 400 V 3-phase	A	40	68	120	200
Short time rating with no current flow for the previous previous 15 minutes with θ ≤ 40 °C	For 10 s	A	128	200	320	504
	For 30 s	A	40	62	100	157
Short-circuit protection by fuse or circuit breaker U ≤ 440 V						
gI fuse		A	16	25	40	63
Circuit breaker I²t (at 3 kA rms prospective)	230V	A²s	5000	10000	16000	18000
	400V	A²s	9000	14000	17500	20000
Electrical durability in operating cycles	AC-7a, AC-7b		100000	100000	100000	100000
Average impedance per pole	At Ith and 50 Hz	mΩ	2.5	2.5	2	2
Power dissipated per pole	For the above operational currents	W	0.65	1.6	3.2	8
Maximum cabling c.s.a.						
Flexible cable without cable end	1 conductor	mm²	6	6	25	25
	2 conductors	mm²	4	4	16	16
Flexible cable with cable end	1 conductor	mm²	6	6	16	16
	2 conductors	mm²	1.5	1.5	4	4
Solid cable without cable end	1 conductor	mm²	6	6	25	25
	2 conductors	mm²	4	4	6	6
Tightening torque	Power circuit connections	N.m	0.8	0.8	3.5	3.5

(1) Ventilation 1/2 module must be fitted.

References: page B8/52
Dimensions and schemes: pages B8/121 and B8/122

Characteristics

Control circuit characteristics

Type				GY16, GY25 single or 2-pole	GY16, GY25 3 or 4-pole / GY40, GY63 2-pole	GY40, GY63 3 or 4-pole
Rated control circuit voltage (Uc)	50 or 60 Hz		V	12…240 V, for other voltages, please consult your Regional Sales Office		
Control voltage limits (θ ≤ 50 °C)						
50 Hz coils	Operational			0.85…1.1 Uc		
	Drop-out			0.2…0.75 Uc		
Average consumption at 20 °C and at Uc						
∼ 50 Hz	Inrush		VA	15	34	53
	Sealed		VA	3.8	4.6	6.5
Heat dissipation	50/60 Hz		W	1.3	1.6	2.1
Operating time	Closing "C"		ms	10 ... 30		
	Opening "O"		ms	10 ... 25		
Mechanical durability	In operating cycles			10^6		
Maximum operating rate at ambient temperature ≤ 50 °C	In operating cycles per hour			300		
Maximum cabling c.s.a.						
Flexible cable without cable end	1 or 2 conductors		mm^2	2.5		
Flexible cable with cable end	1 conductor		mm^2	2.5		
	2 conductors		mm^2	1.5		
Solid cable without cable end	1 or 2 conductors		mm^2	1.5		
Tightening torque			N.m	0.8		

Instantaneous auxiliary contact characteristics

Rated operational voltage (Ue)	Up to	V	250
Rated insulation voltage (Ui)	Conforming to IEC 60947-5	V	500
	Conforming to VDE 0110	V	500
Conventional thermal current (Ith)	For ambient θ ≤ 50 °C	A	5
Mechanical durability	In operating cycles		10^6
Maximum cabling c.s.a.	Flexible or solid conductor	mm^2	2.5
Tightening torque		N.m	0.8

Ref.
Contactors

References: page B8/52
Dimensions and schemes: pages B8/121 and B8/122

Dimensions

Dimensions

"Dual tariff" contactors

Common side view	GY1620 GY2520	GY2530, 2540
	1 module	2 modules

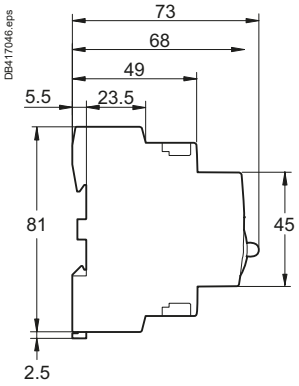

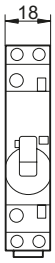

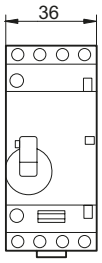

Common side view	GY4020 GY6320	GY4030, 4040 GY6330, 6340
	2 modules	3 modules

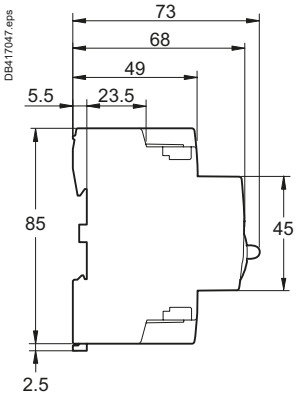

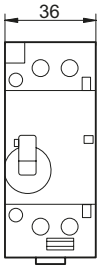

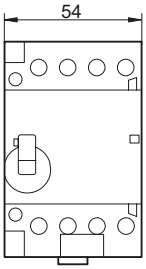

Auxiliary contacts

GAC0511, 0531 and 0521

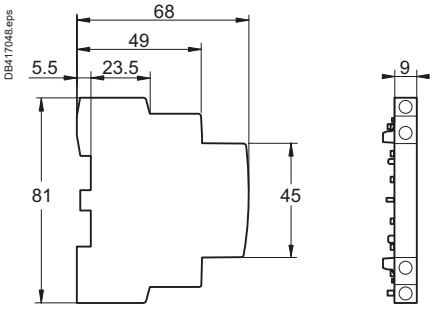

Coil suppression block

GAP21 and 23

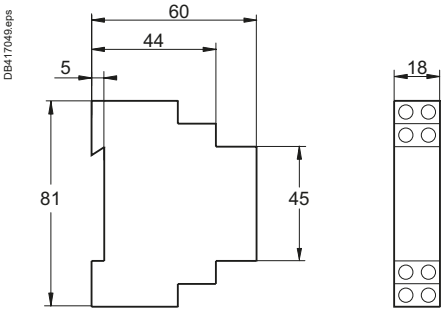

Clip-on ventilation 1/2 module

GAC5

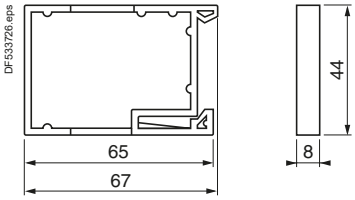

References:
page B8/52

Characteristics:
pages B8/118 to B8/120

Mounting

Setting-up precautions

The contactor controls must be bounce free. If not, connect a coil suppression block 1 (GAP 21 or 23) across the coil terminals ⩽ 250 V.
When several contactors which operate at the same time are mounted side by side, a GAC5 ventilation 1/2 module 2 must be fitted every 2 contactors.

DB417052.eps

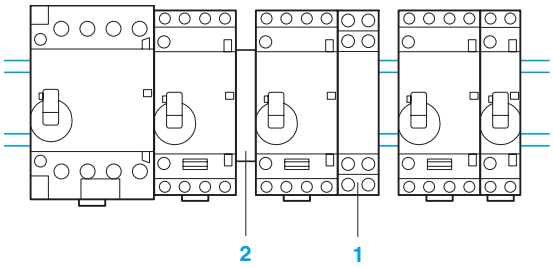

It is advisable to mount electronic units at the bottom of the modular panel and to separate them from electromechanical units by a space equal to one module 3 or by 2 ventilation 1/2 modules GAC5.

DB417053.eps

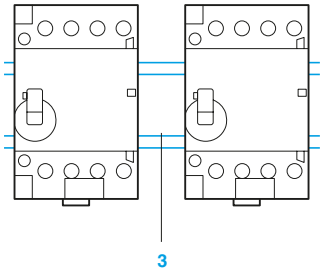

Schemes

Contactors

GY●●20	GY●●30	GY●●40	GY●●11

812037.eps

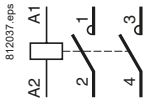

812038.eps

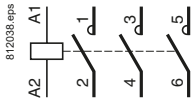

812039.eps

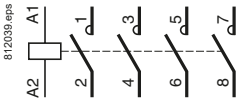

812040.eps

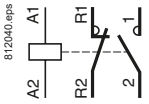

Auxiliary contacts

GAC0521	GAC0531	GAC0511

812041.eps

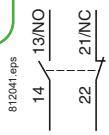

812042.eps

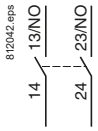

812046.eps

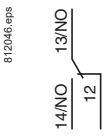

Ref.

Contactors

Characteristics

PF526284R.eps



GF1611M7

Modular impulse relays are designed for use in modular enclosures.
They feature:

■ **Easy installation:**
- □ quick clip-on fixing and locking onto 35 mm omega rail
- □ easy connection by means of ready-to-tighten captive, pozidrive screw terminals.

■ **Compact size**

Units have a common depth of 60 mm and width of 18 mm.

■ **User safety:**
- □ live parts protected against direct finger contact
- □ completely safe operation
- □ state indication on front panel.

Standards

This range of modular impulse relays has been designed taking into account the requirements of international standard IEC 60669-2.
This standard is specific to “Impulse relays”.
Conformity with this standard makes it possible to obtain the following quality labels without the need for additional tests: NF-USE, VDE, CEBEC, etc.

Functions

Modular impulse relays are designed for opening and closing of circuits which are remotely controlled by impulses. The position is mechanically maintained.
These impulse relays are used in lighting circuits when there are more than two switching points.

Power switching

Modular impulse relays have multiple applications in industrial, agricultural and commercial premises, hospitals and the home, i.e. wherever switching of a specific lighting supply is required.

References:
page B8/53

Dimensions, schemes:
page B8/127

Characteristics

Environment

Rated insulation voltage (Ui)	Conforming to IEC 60947-1-5	**V**	400
	Conforming to VDE 0110	**V**	400
Rated impulse withstand voltage (Uimp)		**kV**	4 in enclosure
Conforming to standards			IEC 60669-1 and 60669-2
Product certifications			NF-USE, CEBEC, ASE, KEMA, N, S, D, FI, VDE
Degree of protection	Conforming to IEC 60529		Protection against direct finger contact IP 20 open, IP 40 in enclosure
Ambient air temperature around the device	Storage	**°C**	-40…+80
	Operation	**°C**	-20…+50
Maximum operating altitude	Without derating	**m**	2000
Operating positions	Without derating		±90° in relation to normal vertical mounting plane
Shock resistance 1/2 sine wave = 10 ms Conforming to IEC/EN 60068-2-27	Impulse relay open		Please consult your Regional Sales Office
	Impulse relay closed		Please consult your Regional Sales Office
Vibration resistance 5…300 Hz Conforming to IEC/EN 60068-2-6	Impulse relay open		4 gn
	Impulse relay closed		4 gn

Pole characteristics

Number of poles				1 or 2	
Rated operational current (Ie) (Ue ≤ 250 V)	In AC-7a (heating)		**A**	16	
Rated operational voltage			**V**	250	
Conventional thermal current (Ith)	θ ≤ 50 °C		**A**	16	
Permissible short time rating no current flowing for preceding 15 minutes with θ ≤ 40 °C	For 1 s		**A**	320	
	For 10 s		**A**	96	
	For 30 s		**A**	48	
Short-circuit protection by fuse or circuit breaker	gI fuse		**A**	16	
	Circuit breaker I^2t (at 3 kA rms prospective)		**A^2s**	5000	
Average impedance per pole	At Ith and 50 Hz		**mΩ**	4	
Power dissipated per pole			**W**	1	
Maximum cabling c.s.a.				**Min.**	**Max.**
	Flexible cable without cable end	1 conductor	**mm^2**	0.5	6
		2 conductors	**mm^2**	0.5	4
	Flexible cable with cable end	1 conductor	**mm^2**	0.5	6
		2 conductors	**mm^2**	0.5	4
	Solid cable without cable end	1 conductor	**mm^2**	0.5	6
		2 conductors	**mm^2**	0.5	4
Tightening torque	Power circuit connections		**N.m**	0.8	

References: page B8/53
Dimensions, schemes: page B8/127

Characteristics

Control circuit characteristics

Rated control circuit voltage (Uc)			**V**	12…240 V, for other voltages, please consult your Regional Sales Office
Control voltage limits (θ < 50 °C)		Operating threshold, dual frequency 50/60 Hz	**V**	0.85…1.1 Uc
Average consumption at 20 °C and at Uc		Inrush at 50 Hz	**VA**	19
Operating time		Closing “C”	**ms**	70
		Opening “O”	**ms**	70
Minimum impulse time			**ms**	70
Mechanical durability				10^6 operating cycles
Electrical durability				
		AC-21		200000 operating cycles
		AC-22		100000 operating cycles
Maximum operating rate		Operating cycles per hour		900
Maximum cabling c.s.a.				
	Flexible cable without cable end	1 or 2 conductors	**mm²**	2.5
	Flexible cable with cable end	1 conductor	**mm²**	2.5
		2 conductors	**mm²**	1.5
	Solid cable without cable end	1 or 2 conductors	**mm²**	1.5
Tightening torque			**N.m**	0.8

Ref.
Contactors

References:
page B8/53

Dimensions, schemes:
page B8/127

Characteristics in lighting and heating applications

Lighting circuits

Fluorescent lamps with starter

Single fitting	Non corrected			With parallel correction		
Power in W	18	36	58	18	36	58
Number of lamps	70	35	21	50	25	16

Twin fitting	With series correction		
Power in W	2 x 18	2 x 36	2 x 58
Number of lamps	56	28	17

Incandescent lamps: filament lamps

Power in W	40	60	75	100	200
Number of lamps	40	25	20	16	8

Incandescent lamps: halogen lamps

Power in W	300	500	1000	1500
Number of lamps	5	3	1	1

Incandescent lamps: very low voltage halogen lamps

Power in W	20	50	75	100
Number of lamps	70	28	19	4

Low pressure sodium vapour lamps

	Non corrected			
Power in W	55	90	135	180
Number of lamps	24	15	10	7

High pressure sodium vapour lamps

	Non corrected		
Power in W	250	400	1000
Number of lamps	5	3	1

Heating circuits

Single-phase 230 V, 2-pole

Power in kW	3.6

References:
page B8/53
Dimensions, schemes:
page B8/127

Dimensions and schemes

Dimensions

GF1610, GF1611, GF1620

DF534007.eps

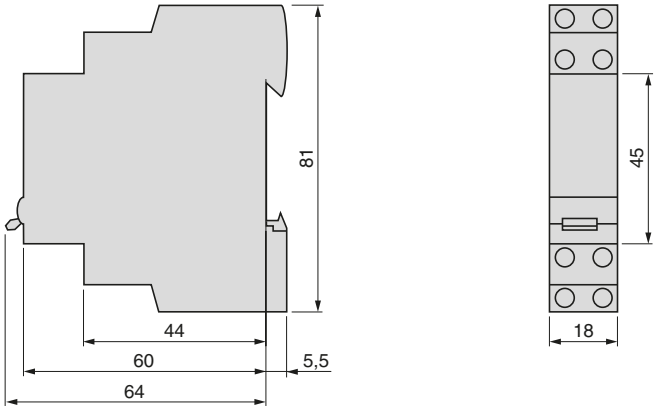

Schemes

GF1610	GF1611	GF1620

DF534008.eps

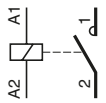

DF534009.eps

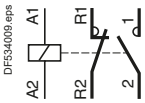

DF534010.eps

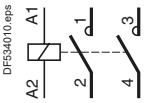

Ref.
Contactors

References:
page B8/53

Characteristics:
pages B8/123 to B8/126

Test conditions according to IEC utilization categories

Contactor characteristics are established following tests and utilization categories whose are conforming IEC 60947-4-1 and 5-1 standards.

Contactors

		Electrical durability: making and breaking conditions						Occasional duty: making and breaking conditions					
a.c. supply													
Typical applications	**Utilisation category**	**Making**			**Breaking**			**Making**			**Breaking**		
		I	**U**	**cos φ**	**I**	**U**	**cos φ**	**I**	**U**	**cos φ**	**I**	**U**	**cos φ**
Resistors, non inductive or slightly inductive loads	**AC-1**	Ie	Ue	0.95	Ie	Ue	0.95	1.5 Ie	1.05 Ue	0.8	1.5 Ie	1.05 Ue	0.8
Motors													
Slip ring motors: starting, breaking.	**AC-2**	2.5 Ie	Ue	0.65	2.5 Ie	Ue	0.65	4 Ie	1.05 Ue	0.65	4 Ie	1.05 Ue	0.65
Squirrel cage motors: starting, breaking whilst motor running.	**AC-3**												
	Ie ≤ (1)	6 Ie	Ue	0.65	1 Ie	0.17 Ue	0.65	10 Ie	1.05 Ue	0.45	8 Ie	1.05 Ue	0.45
	Ie > (2)	6 Ie	Ue	0.35	1 Ie	0.17 Ue	0.35	10 Ie	1.05 Ue	0.35	8 Ie	1.05 Ue	0.35
Squirrel cage motors: starting, reversing, inching	**AC-4**												
	Ie ≤ (1)	6 Ie	Ue	0.65	6 Ie	Ue	0.65	12 Ie	1.05 Ue	0.45	10 Ie	1.05 Ue	0.45
	Ie > (2)	6 Ie	Ue	0.35	6 Ie	Ue	0.35	12 Ie	1.05 Ue	0.35	10 Ie	1.05 Ue	0.35
d.c. supply													
Typical applications	**Utilisation category**	**Making**			**Breaking**			**Making**			**Breaking**		
		I	**U**	**L/R** (ms)	**I**	**U**	**L/R** (ms)	**I**	**U**	**L/R** (ms)	**I**	**U**	**L/R** (ms)
Resistors, non inductive or slightly inductive loads	**DC-1**	Ie	Ue	1	Ie	Ue	1	1.5 Ie	1.05 Ue	1	1.5 Ie	1.05 Ue	1
Shunt wound motors: starting, reversing, inching	**DC-3**	2.5 Ie	Ue	2	2.5 Ie	Ue	2	4 Ie	1.05 Ue	2.5	4 Ie	1.05 Ue	2.5
Series wound motors: starting, reversing, inching	**DC-5**	2.5 Ie	Ue	7.5	2.5 Ie	Ue	7.5	4 Ie	1.05 Ue	15	4 Ie	1.05 Ue	15

Control relays and auxiliary contacts

		Electrical durability: making and breaking conditions						Occasional duty: making and breaking conditions					
a.c. supply													
Typical applications	**Utilisation category**	**Making**			**Breaking**			**Making**			**Breaking**		
		I	**U**	**cos φ**	**I**	**U**	**cos φ**	**I**	**U**	**cos φ**	**I**	**U**	**cos φ**
Electromagnets													
≤ 72 VA	**AC-14**	-	-	-	-	-	-	6 Ie	1.1 Ue	0.7	6 Ie	1.1 Ue	0.7
> 72 VA	**AC-15**	10 Ie	Ue	0.7	Ie	Ue	0.4	10 Ie	1.1 Ue	0.3	10 Ie	1.1 Ue	0.3
d.c. supply													
Typical applications	**Utilisation category**	**Making**			**Breaking**			**Making**			**Breaking**		
		I	**U**	**L/R** (ms)	**I**	**U**	**L/R** (ms)	**I**	**U**	**L/R** (ms)	**I**	**U**	**L/R** (ms)
Electromagnets	**DC-13**	Ie	Ue	6 P (3)	Ie	Ue	6 P (3)	1.1 Ie	1.1 Ue	6 P (3)	1.1 Ie	1.1 Ue	6 P (3)

(1) Ie ≤ 17 A for electrical durability, Ie ≤ 100 A for occasional duty.
(2) Ie > 17 A for electrical durability, Ie > 100 A for occasional duty.
(3) The value 6 P (in watts) is based on practical observations and is considered to represent the majority of d.c. magnetic loads up to the maximum limit of P = 50 W i.e. 6 P = 300 ms = L/R.
Above this, the loads are made up of smaller loads in parallel. The value 300 ms is therefore a maximum limit whatever the value of current drawn.

North American market - UL CSA classification of motor starter applications

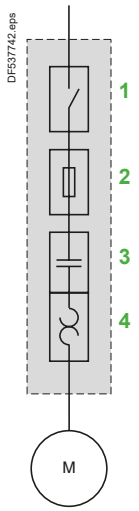

1 Motor Disconnect (Disconnect switch)
2 Motor Branch Circuit Protection (Short-circuit protection)
3 Motor Controller (Contactor)
4 Motor Overload Protection (Thermal overload relay)

Starters for the North American market

In recent years, the North American market has started to harmonise UL, CSA and ANCE standards, as well as the industrial installation codes provided by national regulations (NEC for the United States, CEC for Canada and MEC for Mexico). (1)
Major improvements, carried out by the Canena (2) are aimed at harmonising product requirements based on IEC (3) standards.
However, the North American codes use specific terminology for defining the functions of a starter.
These functions can be fulfilled by standard IEC products, accompanied by appropriate certifications.

Combination Starters

Combination Starters are the most common type of packaged motor starter. They are called "Combination" because of their structure and their combined functions. The figure opposite shows the four combined functions that constitute a complete motor starter circuit, defined as a “Motor branch circuit” by the NEC (US National Electric Code) in article 430. Standard UL508 currently gives different types of combination starter that meet the requirements of a "Motor branch circuit".

Type E, called “**self-protected combination starter**”, covers all these functions and can be controlled manually (thermal-magnetic circuit breaker) or remotely (starter-controller). Type E starters withstand faults within their declared nominal rating without sustaining damage, after which they can be put back into service. In addition, they can withstand more severe short-circuit and durability performance tests without welding or excessive wear of the contact tips.

Type F, called “**Combination motor starter**”, consists of a type E manual starter (thermal-magnetic circuit breaker) combined with a contactor.
These starters are evaluated by means of basic short-circuit tests, but are not considered as “self-protected”.

For this combination, the type E starter must be marked “Combination Motor Controller when used with ...”, followed by the reference of the load side contactor.

(1) ***UL****: Underwriters Laboratories,* ***CSA****: Canadian Standards Association,* ***ACNE****: Association of Standardization and Certification,* ***NEC****: National Electric Code,* ***CEC****: Canadian Electrical Code,* ***MEC****: Mexican Electrical Code.*
(2) ***Canena****: Council for Harmonization of Electrotechnical Standardization of North America.*
(3) ***IEC****: International Electrotechnical Commission.*

Control panels

To help users properly coordinate their motor control equipment with their distribution system in the event of a fault, article 409 of the 2005 NEC requires panel builders to list the short-circuit withstand rating of their motor control panels.
According to standard UL508A, manufacturers must use the short-circuit withstand value of the lowest rated device as the nominal withstand rating of the panel, unless the devices have been tested together for a higher coordinated rating.
The minimum "**short-circuit current rating**" (SCCR), on motor control components for horsepower ratings of 50 hp or below is 5000 A.

Using a **type E** or **type F** combination starter eliminates the coordination problems of using individual components for the "motor branch circuit protection", "motor controller" and "motor overload protection" functions.
The panel builder uses the declared short-circuit current rating for the combination starter. This value is generally higher than 5000 A.
This makes it easier to list the short-circuit current ratings and to check the compatibility of a UL508A motor control panel within a given distribution system.

Group protection

Article 430.53 of the NEC allows a single short-circuit protection device to be used for more than one motor circuit if the components used are marked and listed for such use.
Components suitable for use in group protection, known as "**motor group installations**", can be marked in one of the following two ways:

Case n° 1

The contactor and the motor overload relay are both listed as suitable for group installation.
An inverse time circuit breaker can be used as the short-circuit protection device if it is also listed as suitable for group installation.
The panel builder must therefore make sure that the short-circuit protection device selected (fuses or inverse time circuit breaker) does not exceed the value allowed by article 430.40 for the smallest overload relay used in the circuit.
Once these conditions have been met, the panel builder can reduce the size of the conductor connecting the short-circuit protection device to the individual motor contactor/overload relay, to one third of the size of the upstream circuit conductor supplying the protection device.
The panel builder must limit the length of the motor starter conductor (connecting the short-circuit protection device to the motor contactor/overload relay) to a maximum of 7.6 m (25 feet).

Case n° 2

The motor contactor and overload relay are listed as suitable for "**tap conductor protection**" in group installations.
This category allows the panel designer to reduce the size of the conductor connecting the short-circuit protection device to the individual motor contactor/overload relay, to one tenth of the size of the upstream circuit conductor supplying the protection device.
The designer must limit the length of this conductor to a maximum of 3.05 m (10 feet).
In both cases, the supply circuits must not be less than 125 % of the connected motor FLA (Full Load Amps) rating.
For panel builders, using **type F** combination starters in group installations simplifies group motor considerations.
Each starter is a fully coordinated motor branch circuit.
The panel builder follows the same NEC requirements for sizing the supply conductors as those required for single motor branch circuits.
The size of the supply conductors can be reduced in accordance with the specifications of article 430.28.
This allows the same flexibility in conductor sizing as that offered in article 430.53 (D), without a requirement to check the short-circuit protection rating marked on the components and the overload relay limit.
A UL508A panel does not need a short-circuit protection device when each motor starter installed is a **type F**.
The upstream short-circuit protection device supplying the starter protects the panel. The panel builder only has to consider the panel/enclosure disconnect requirements specified by the NEC or local codes.

TeSys Control
Giga High power contactors

Introduction B9/4

TeSys Giga High power contactors

Type of product	Range		Pages
TeSys Giga High power contactors Advanced version - 3 and 4-poles	3-pole from 115 to 800 A – AC-3 3-pole and 4-pole from 250 to 1050 A – AC-1		B9/10
TeSys Giga High power contactors Standard version - 3 and 4-poles	3-pole from 115 to 800 A – AC-3 3-pole and 4-pole from 250 to 1050 A – AC-1		B9/12
Auxiliary modules, Accessories, Retrofit kits for TeSys Giga High power contactors			B9/14
Spare parts for TeSys Giga High power contactors			B9/20

Technical Data for Designers B9/23

On-line tools to configure your **motor starters**

EcoStruxure™ Motor Control Configurator

Scan or click on the QR code

Build your starter configuration

- Build your motor starter configuration with different solutions
- Complete offer base suited for different countries.

Enhanced customer's journey

- Easy selection, replacing complex paper catalogs
- Covert into Bill of Materials (BoM) by adding the products to the cart.

Answers to customer needs

- Option to save and re-work your configurations
- Direct access to products documentation in one place
- Possibility with unique configurations ID and share.

Product Selector for **TeSys** Giga

Scan or click on the QR code

Offer selection

- Easy selection of **TeSys** Giga Contactor or Overload Relays
- Intuitive tool to configure the devices to suit your needs
- Helps to select the right devices for your application.

Configure your motor starter components

- Options to select auxiliaries and accessories
- Configure reversers and changeover contactors with ease
- Get the extensive bill of material, export it in standard format (PDF, XLS), or drop it into the product cart
- Access to technical information and documentations for every item.

EcoStruxure Motor Management Design

Scan or click on the QR code

Electrical design calculations for high-power motors

Easily perform basic calculations related to transformer size, short-circuit current and voltage drop, comparing direct-on-line, star-delta, soft-starter, and variable speed drive. Verify starting feasibility from mechanical standpoint and ensure power quality objectives are met, for power factor or harmonic levels. Check energy saving potential of using a variable speed drive for centrifugal pumps and fans.

Offer selection and report

Select among latest compatible offers to build a complete motor management solution: circuit breakers, contactors, MCC panels, drives, protection relays, power factor capacitors, active filters, power quality monitoring and services.
Get a summary report with calculations and recommended offers.

Product references – coding principle

> TeSys Giga High power contactors



LC1	G	185	4	EHE	N
Contactor	TeSys Giga series	Contactor rating 115: 115 A 150: 150 A 185: 185 A 225: 225 A 265: 265 A 330: 330 A 400: 400 A 500: 500 A 630: 630 A 800: 800 A	Poles Blank: 3-pole 4: 4-pole	Control voltage (AC/DC) **Advanced version (A)** BEE: 24…48 V (1) EHE : 48...130 V LSE: 200…500 V **Standard version (N)** EHE: 48…130 V KUE: 100…250 V	Offer type A: Advanced version N: Standard version

Example:

LC1G400LSEA TeSys Giga Contactor Advanced version 400 A, 3-pole, 200...500 V AC/DC coil, with PLC control.

LC1G1854EHEN TeSys Giga Contactor Standard version 185 A, 4-pole, 48...130 V AC/DC coil, without PLC control.

(1) 24...48 V AC/DC control voltage option is available for LC1G115...LC1G500 ratings.

> Quality and Performance as high priority

TeSys Giga
A new Generation series with digital innovation

Over more than 4 decades, the **TeSys F** range of contactors has built a high reputation for performance, reliability, and quality. The **TeSys F** range set the industrial standard for high power contactors with an installed base of millions of products. **TeSys F** contactors were the first choice of many OEMs, control panel builders and industrial users.

But industry requirements have evolved to demand process performance monitoring through data networks and online expert services.

TeSys Giga is Schneider Electric's new range of contactors that answer these evolving needs. TeSys Giga High power contactors support the evolution of processes and offer new services to reduce non-production time to a minimum. Replacing **TeSys F** Contactors, TeSys Giga High power contactors address a wide range of demanding applications with built-in advanced features and functionalities.



Futuristic ready…

TeSys Giga High power contactors are designed to work with components and accessories with advanced performance. The characteristics of robustness and longevity are maintained, both in the connectors and in the switching.

Continuous local and remote monitoring of contact wear optimizes predictive maintenance by allowing you to replace contacts only when necessary, facilitated by diagnostic visual indicator.

Every customer will benefit from the innovative design and feature, including the compact size, wideband electronic coils, embedded auxiliary contact blocks, ergonomic design, or flexibility in connections.

> Applications



AC-3/AC-3e utilization category



AC-1 utilization category

- TeSys Giga High power contactors provide robust control solutions for AC-3/AC-3e applications up to 800 A and AC-1 applications up to 1050 A.
- TeSys Giga High power contactors can be part of a direct-on-line motor starter, reversing motor starter or a star-delta motor starter and power switching application.
- TeSys Giga High power contactors provide contact wear diagnostic and wideband AC/DC control.
- Suitable for type 2 coordination as per IEC60947-4-1.

> Right choice for a wide range of demanding applications







TeSys Giga High power contactors ' unique design meets the common requirements of demanding high power applications:

- Conform to multi standards to suit global needs
- Long life expectancy in harsh environments
- Suitable for high efficiency motors
- Very good resistance to vibrations
- High uptime thanks to predictive maintenance
- Optimized installation and maintainability.

> Intelligent design for greater advantages



- Interlock location, with knock-out cover
- On/Off switch for PLC input
- Push-in type control terminals enabling quick wiring and assembly
- Diagnosis LED for contact wear & voltage abnormality
- Built-in 1 NO + 1 NC auxiliary contact block
- Unique QR code providing quick access to complete product data
- Mechanical indicator for contactor open and closed status



Higher flexibility

TeSys Giga High power contactors can be mounted in different orientation without derating, providing high flexibility of your panel design.

Control wiring, auxiliary contacts and control module are accessible from the front.



Contact wear diagnostic and predictive maintenance

Contact wear is monitored by a dedicated module and shown in the front panel through LED, therefore the, predictive maintenance can be planned for replacing the complete set of switching modules, thus avoiding break-down maintenance. Switching modules (1) can be replaced quickly and easily thanks to their Plug and Play design.

(1) Refer to page B9/21 for details on switching modules.

> Key features

Advanced contactor control

- The electronic control module provides wideband AC/DC coil control voltage, from 24 V to 500 V, allowing quick adaptation of existing industrial processes as well as new projects.
- The low power consumption of the coils could lead to significant savings on automation equipment. It's now possible to use interface relays with a lower rating, resulting in lower heat emission in the panel.
- The low power consumption of the coils also takes up less space in the panel and simplifies the diagrams by connecting these coils directly to the output cards of the PLCs.

Simplified wiring

- The pole pitch of the power terminals allows direct mounting and connection to TeSys Giga Electronic Overload Relays. Standardization of panel mounting and assembly reduces costs and assembly time.
- Push-in connection for control terminals provides flexibility, ease of connections, and reduced assembly and installation time.

Enhanced durability

- Durability is a top priority. TeSys Giga High power contactors are designed to offer uncompromising robustness and maintenance accessibility to site technicians. The duration of production
down-time is reduced, resulting in improved profitability on your investment.

Advanced diagnostic features

- On-board diagnostics is a new feature in our latest generation of high power contactors. Counting the number of operations as well as monitoring duration of use and pole condition provides numerous benefits for the customer and improves reliability and maintenance planning.

Compact size

- Compact size provides easy access to power connections for connecting cables and busbars.

Easy maintenance

- The poles are designed as replaceable switching modules, so the performance of a used contactor can be fully restored. The modular design allows a quick and long-lasting replacement.
- Coils are accessible from the front and maintained with very low down times.

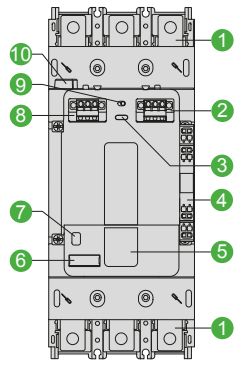

Advanced (*A) version

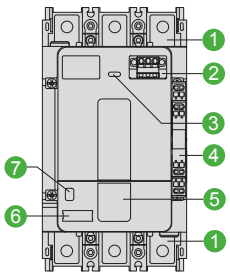

Standard (*N) version

1. Power connection (cable memory kit provided with Advanced version contactor)
2. A1-A2 coil terminal
3. Contact wear diagnosis LED
4. 1 NO + 1 NC auxiliary contact
5. QR code
6. Label holder
7. Status indicator
8. PLC control terminal
9. PLC control ON/OFF switch
10. Connector for Remote Wear Diagnostic (RWD) module

*: contactor references finishing by A or by N.

A comprehensive range of TeSys Giga High power contactors that are available in 'Advanced' and 'Standard' versions, in 3 sizes, covering several ratings.
A common range of auxiliary contacts and accessories, enabling high flexibility and simplicity.

> **TeSys** Giga High power contactors – Advanced version



115…225 A



265…500 A



630…800 A

Power & control
- 3 or 4 power poles
- 115 to 800 A (AC-3)
- 250 to 1050 A (AC-1)
- Embedded 1 NO + 1 NC auxiliary contacts
- Push-in type terminals for coils & control

Remote control
- 24-48 V, 48-130 V, 200-500 V AC/DC coils
- Low consumption coils
- Wide voltage range coils (direct coil control)
- Digital control input (PLC output digital coil control)
- Embedded surge suppressor

Diagnostic
- Embedded wear diagnostic
- Embedded control voltages diagnostic
- Self diagnosis function
- Local alarm signaling (LED)
- Remote wear diagnostic signaling kit (accessory)

Mounting
- 'Cable memory' adapter enables maintenance without removing power cables and busbar connections.

Standards and Certifications
- Multiple standards
- International certifications

> **TeSys** Giga High power contactors – Standard version



115…225 A



265…500 A



630…800 A

Power & control
- 3 or 4 power poles
- 115 to 800 A (AC-3)
- 250 to 1050 A (AC-1)
- Embedded 1 NO + 1 NC auxiliary contacts
- Push-in type terminals for coils & control

Remote control
- 48-130 V, 100-250 V AC/DC coils
- Wide voltage range coils (direct coil control)
- Embedded surge-suppressor

Diagnostic
- Embedded wear diagnostic
- Embedded control voltages diagnostic
- Self diagnosis function
- Local alarm signaling (LED)

Certifications
- Multiple standards
- International certifications

DB438441.ai

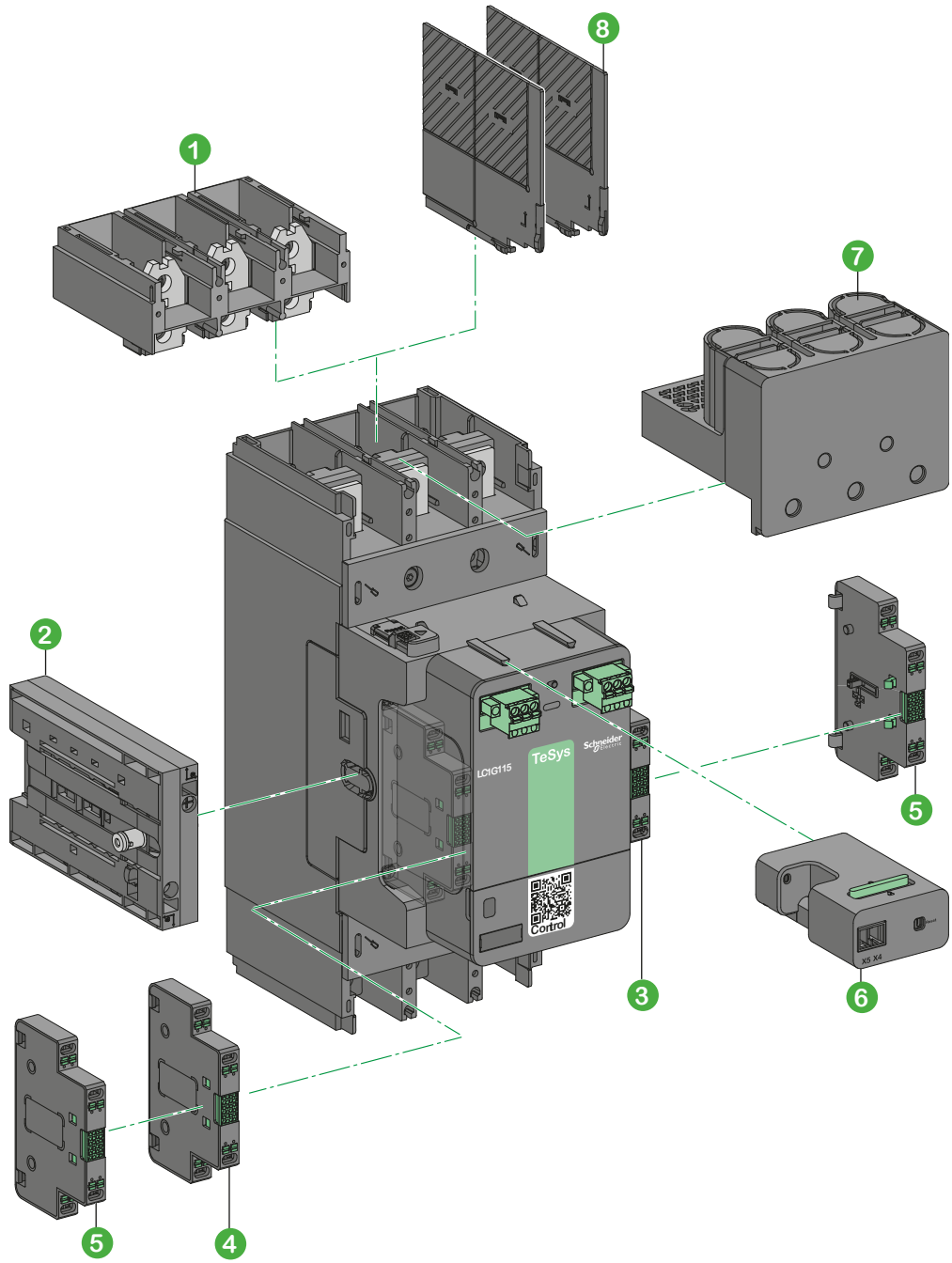

1 Cable memory kit **LA9G3102,** is always supplied along with Advanced version, and it's an optional accessory for Standard version.
2 Mechanical interlock **LA9G970**, can be installed on either side of the contactor.
3 Auxiliary contact module **LAG8N113P** (1 NO + 1 NC) supplied with LC1G contactor.
4 Auxiliary contact modules **LAG8N113P/ LAG8N203P,** can be installed on the contactor lateral faces (1)
5 Auxiliary contact modules **LAG8N113 / LAG8N203**, can be installed on either side as 2nd set of contacts.
6 Remote Wear Diagnostic (RWD) Module **LA9GRD01/ LA9GRD10**, can be installed and used only in Advanced version.
7 IP 20 terminal shroud **LA9G3701.**
8 Phase separators **LA9G3801**, please refer to pages B9/14 to B9/18 for complete details of available accessories.

Note: a maximum of 2 auxiliary contact modules can be mounted on each side of the contactor.
(1) Does not increase the contactor dimensions when fitted on both sides.

TeSys Giga 3-pole Advanced contactors – For motor control (115 to 800 A)





Motor ratings (kW) θ ≤ 60 °C																					
IEC																					
AC-3							AC-3e [1]							AC-4							
230 V	400 V	415 V	440 V	500 V	690 V	1000 V	230 V	400 V	415 V	440 V	500 V	690 V	1000 V	230 V	400 V	415 V	440 V	500 V	690 V	1000 V	
kW	kW	kW	kW	kW	kW	kW	kW	kW	kW	kW	kW	kW	kW	kW	kW	kW	kW	kW	kW	kW	
30	55	55	75	75	75	-	30	55	55	75	75	75	-	30	55	55	65	65	75	-	
37	75	75	90	90	90	75	37	75	75	90	90	90	75	37	75	75	80	90	90	75	
55	90	90	110	110	110	75	55	90	90	110	110	110	75	55	90	90	100	110	110	75	
55	110	110	132	132	160	132	55	110	110	132	132	160	132	55	110	110	129	132	132	110	
75	132	132	160	160	200	160	75	132	132	160	160	200	160	75	132	132	150	160	160	160	
90	160	160	200	200	220	185	90	160	160	185	200	220	185	90	160	160	185	200	220	185	
110	200	200	250	250	315	220	110	200	200	250	250	315	220	110	200	200	220	250	315	220	
160	250	250	315	355	355	335	147	250	250	280	315	355	335	150	250	250	295	295	355	280	
200	335	375	400	400	500	450	180	315	335	355	375	500	450	180	315	335	355	375	450	355	
250	450	450	450	500	560	450	200	335	355	375	425	560	450	200	375	355	375	400	475	400	

TeSys Giga 3-pole and 4-pole Advanced contactors for load control only (non motor) – (250 to 1050 A)





Maximum current (A) (θ ≤ 40 °C)	General purpose continuous current (A)	Reference Advanced version contactors AC/DC coil voltage					
		3-pole			4-pole		
IEC	UL	24…48 V	48…130 V	200…500 V	24…48 V	48…130 V	200…500 V
AC-1							
250	210	LC1G115BEEA	LC1G115EHEA	LC1G115LSEA	LC1G1154BEEA	LC1G1154EHEA	LC1G1154LSEA
275	230	LC1G150BEEA	LC1G150EHEA	LC1G150LSEA	LC1G1504BEEA	LC1G1504EHEA	LC1G1504LSEA
305	250	LC1G185BEEA	LC1G185EHEA	LC1G185LSEA	LC1G1854BEEA	LC1G1854EHEA	LC1G1854LSEA
330	290	LC1G225BEEA	LC1G225EHEA	LC1G225LSEA	LC1G2254BEEA	LC1G2254EHEA	LC1G2254LSEA
385	340	LC1G265BEEA	LC1G265EHEA	LC1G265LSEA	LC1G2654BEEA	LC1G2654EHEA	LC1G2654LSEA
440	390	LC1G330BEEA	LC1G330EHEA	LC1G330LSEA	LC1G3304BEEA	LC1G3304EHEA	LC1G3304LSEA
550	490	LC1G400BEEA	LC1G400EHEA	LC1G400LSEA	LC1G4004BEEA	LC1G4004EHEA	LC1G4004LSEA
700	630	LC1G500BEEA	LC1G500EHEA	LC1G500LSEA	LC1G5004BEEA	LC1G5004EHEA	LC1G5004LSEA
1050	850	-	LC1G630EHEA	LC1G630LSEA	-	LC1G6304EHEA	LC1G6304LSEA
1050	900	-	LC1G800EHEA	LC1G800LSEA	-	LC1G8004EHEA	LC1G8004LSEA

(1) Switching of IE3/IE4 high efficiency squirrel-cage motors.

Coordination tables: pages A5/7 to A5/42
Characteristics: pages B9/25 to B9/29
Dimensions: pages B9/30 to B9/32
Diagrams: page B9/34

Product references

Motor ratings (HP) UL- 3phase				Reference Advanced version contactors AC/DC coil voltage 3-pole		
200/208 V	230/240 V	460/480 V	575/600 V	24-48 V	48-130 V	200-500 V
30	40	75	100	**LC1G115BEEA**	**LC1G115EHEA**	**LC1G115LSEA**
40	50	100	125	**LC1G150BEEA**	**LC1G150EHEA**	**LC1G150LSEA**
50	60	125	150	**LC1G185BEEA**	**LC1G185EHEA**	**LC1G185LSEA**
60	75	150	150	**LC1G225BEEA**	**LC1G225EHEA**	**LC1G225LSEA**
75	100	200	200	**LC1G265BEEA**	**LC1G265EHEA**	**LC1G265LSEA**
100	125	250	300	**LC1G330BEEA**	**LC1G330EHEA**	**LC1G330LSEA**
125	150	300	400	**LC1G400BEEA**	**LC1G400EHEA**	**LC1G400LSEA**
150	200	400	450	**LC1G500BEEA**	**LC1G500EHEA**	**LC1G500LSEA**
250	300	600	700	-	**LC1G630EHEA**	**LC1G630LSEA**
300	350	700	800	-	**LC1G800EHEA**	**LC1G800LSEA**

Coordination tables: pages A5/7 to A5/42
Characteristics: pages B9/25 to B9/28
Dimensions: pages B9/30 to B9/32
Diagrams: page B9/34

TeSys Giga 3-pole Standard contactors – For motor control – (115 to 800 A)





Motor ratings (kW) θ ≤ 60 °C																					
IEC																					
AC-3							AC-3e [1]							AC-4							
230 V	400 V	415 V	440 V	500 V	690 V	1000 V	230 V	400 V	415 V	440 V	500 V	690 V	1000 V	230 V	400 V	415 V	440 V	500 V	690 V	1000 V	
kW	kW	kW	kW	kW	kW	kW	kW	kW	kW	kW	kW	kW	kW	kW	kW	kW	kW	kW	kW	kW	
30	55	55	75	75	75	-	30	55	55	75	75	75	-	30	55	55	65	65	75	-	
37	75	75	90	90	90	75	37	75	75	90	90	90	75	37	75	75	80	90	90	75	
55	90	90	110	110	110	75	55	90	90	110	110	110	75	55	90	90	100	110	110	75	
55	110	110	132	132	160	132	55	110	110	132	132	160	132	55	110	110	129	132	132	110	
75	132	132	160	160	200	160	75	132	132	160	160	200	160	75	132	132	150	160	160	160	
90	160	160	200	200	220	185	90	160	160	185	200	220	185	90	160	160	185	200	220	185	
110	200	200	250	250	315	220	110	200	200	250	250	315	220	110	200	200	220	250	315	220	
160	250	250	315	355	355	335	147	250	250	280	315	355	335	150	250	250	295	295	355	280	
200	335	375	400	400	500	450	180	315	335	355	375	500	450	180	315	335	355	375	450	355	
250	450	450	450	500	560	450	200	335	355	375	425	560	450	200	375	355	375	400	475	400	

TeSys Giga 3-pole and 4-pole Standard contactors for load control only (non motor) – (250 to 1050 A)





Maximum current (A) (θ ≤ 40 °C)	General purpose continuous current (A)	Reference			
		Standard version contactors			
		AC/DC coil voltage			
		3-pole		4-pole	
IEC	UL	48…130 V	100…250 V	48…130 V	100…250 V
AC-1					
250	210	LC1G115EHEN	LC1G115KUEN	LC1G1154EHEN	LC1G1154KUEN
275	230	LC1G150EHEN	LC1G150KUEN	LC1G1504EHEN	LC1G1504KUEN
305	250	LC1G185EHEN	LC1G185KUEN	LC1G1854EHEN	LC1G1854KUEN
330	290	LC1G225EHEN	LC1G225KUEN	LC1G2254EHEN	LC1G2254KUEN
385	340	LC1G265EHEN	LC1G265KUEN	LC1G2654EHEN	LC1G2654KUEN
440	390	LC1G330EHEN	LC1G330KUEN	LC1G3304EHEN	LC1G3304KUEN
550	490	LC1G400EHEN	LC1G400KUEN	LC1G4004EHEN	LC1G4004KUEN
700	630	LC1G500EHEN	LC1G500KUEN	LC1G5004EHEN	LC1G5004KUEN
1050	850	LC1G630EHEN	LC1G630KUEN	LC1G6304EHEN	LC1G6304KUEN
1050	900	LC1G800EHEN	LC1G800KUEN	LC1G8004EHEN	LC1G8004KUEN

(1) Switching of IE3/IE4 high efficiency squirrel-cage motors.

Coordination tables: pages A5/7 to A5/42
Characteristics: pages B9/25 to B9/29
Dimensions: pages B9/30 to B9/32
Diagrams: page B9/34

Product references

Motor ratings (HP) UL- 3phase				Reference Standard version contactors AC/DC coil voltage 3-pole	
200/208 V	230/240 V	460/480 V	575/600 V	48-130 V	100-250 V
30	40	75	100	**LC1G115EHEN**	**LC1G115KUEN**
40	50	100	125	**LC1G150EHEN**	**LC1G150KUEN**
50	60	125	150	**LC1G185EHEN**	**LC1G185KUEN**
60	75	150	150	**LC1G225EHEN**	**LC1G225KUEN**
75	100	200	200	**LC1G265EHEN**	**LC1G265KUEN**
100	125	250	300	**LC1G330EHEN**	**LC1G330KUEN**
125	150	300	400	**LC1G400EHEN**	**LC1G400KUEN**
150	200	400	450	**LC1G500EHEN**	**LC1G500KUEN**
250	300	600	700	**LC1G630EHEN**	**LC1G630KUEN**
300	350	700	800	**LC1G800EHEN**	**LC1G800KUEN**

Coordination tables: pages A5/7 to A5/42
Characteristics: pages B9/25 to B9/27 and B9/29
Dimensions: pages B9/30 to B9/32
Diagrams: page B9/34

PB121650.eps



LAG8N113

DB439480.ai

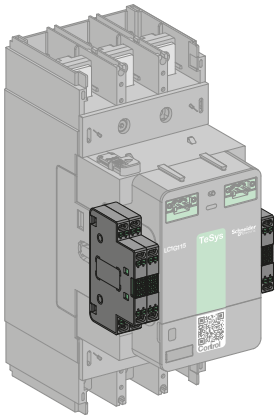

Side mounting – maximum 2 per side

Auxiliary contact modules

Auxiliary contacts give an indication of the contactor status.
They can be used for remote visual signaling, alarming, electrical locking, relay activation, etc...

Each contactor is equipped with 1 NO + 1 NC auxiliary contact block as standard.
■ Mechanically linked mirror contacts
The NC contact of the auxiliary contact block is mirror contact in conformity to IEC 60947-4-1 and it is mechanically linked to reliably represent the state of the main power contacts and wherever auxiliary contact state reliability is essential.
The main power contacts and the NC of the auxiliary contact can't be closed at the same time.

Types of connections:
■ Push-in type.

Wide contactor compatibility

TeSys Giga auxiliary contact module is compatible with the whole range of TeSys Giga High power contactors .
Each TeSys Giga Contactor can be equipped with up to 4 auxiliary contact modules.

Electrical characteristics

Characteristics	
Rated thermal current (A)	10
Minimum load	1 mA at 17 V DC
Contact reliability	Failure rate $<10^{-8}$

Operational power of contacts conforming to IEC 60947-5-1 - Electrical durability

category AC-15

Operating cycles	V	24	48	115	230	400	500
1 million	VA	60	120	280	560	800	500
2 million	VA	24	48	115	230	400	250
3 million	VA	16	32	80	160	280	150

DB439339.eps

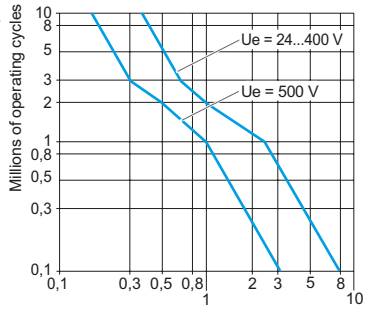

AC-15

category DC-13

Operating cycles	V	24	48	125	250	440
0.5 million	W	100	100	105	110	88
1 million	W	48	72	54	54	55
2 million	W	24	36	38	38	39
3 million	W	16	24	25	25	33

DF537817-R.eps

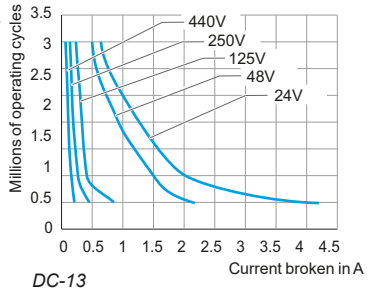

DC-13

Connector characteristics				
Push-in connection - Dual input				Min/max c.s.a.
Flexible cable per input	1 conductor with cable end	mm²		0.75...2.5
	2 conductors with Dual Sleeve	mm²		0.75...2.5
	Stripping length	mm²		10
Solid cable per input	1 conductor	mm²		0.75...2.5
	Stripping length	mm		12

Auxiliary contact modules

Description	Terminal type	Position	Type of contacts	Sold in lots of	Reference
Auxiliary contact module	Push-in	1st left or right	1 NO + 1 NC	1	**LAG8N113P** (1)
			2 NO	1	**LAG8N203P**
		2nd left or right	1 NO + 1 NC	1	**LAG8N113**
			2 NO	1	**LAG8N203**

(1) Always supplied with TeSys Giga *LC1G contactors, fitted to the right side lateral face.*

Coordination tables: pages A5/7 to A5/42
Diagrams: page B9/34

Power terminals

'Cable Memory' connection blocks

Cables or busbars can be connected to the contactor by means of the optional cable memory connection blocks. When the contactor is removed for maintenance, the cables or busbars remain connected to these connection blocks, making reinstallation faster and easier.

PB121730.eps



LA9G3101

Cable memory (1)

Description	Compatible with contactors	Quantity Set of	Reference
'Cable memory' for 3-pole contactors – for holding cables in place	LC1G115...LC1G225	2	**LA9G3101**
	LC1G265...LC1G500	2	**LA9G3102**
	LC1G630...LC1G800	2	**LA9G3103**
'Cable memory' for 4-pole contactors – for holding cables in place	LC1G115...LC1G225	2	**LA9G4101**
	LC1G265...LC1G500	2	**LA9G4102**
	LC1G630...LC1G800	2	**LA9G4103**

(1) 'Cable memory' connection blocks are always supplied with Advanced contactor version.

Flexible terminal extensions

Flexible connecting bars to connect TeSys Giga High power contactors with MCCBs mounted in the same plane and orientation. These bars can be used along with Advanced or Standard version contactors. They help to get a quick and easy connection between contactor and MCCB with saving in installation time.

PB121735.eps



LA9G3111

'Flexible terminal extensions' for MCCBs

Description	Compatible with contactors	To connect with NSX/NS MCCBs	Quantity Set of	Reference
Flexible terminal extensions 3-pole	LC1G115…LC1G225	**NSX100...NSX250**	3	**LA9G3111**
	LC1G265…LC1G500	**NSX400…NSX630**	3	**LA9G3112**
	LC1G630…LC1G800	**NS800…NS1250**	3	**LA9G3113**
Flexible terminal extensions 4-pole	LC1G115…LC1G225	**NSX100...NSX250**	4	**LA9G4111**
	LC1G265…LC1G500	**NSX400…NSX630**	4	**LA9G4112**
	LC1G630…LC1G800	**NS800…NS1250**	4	**LA9G4113**

PB121576.eps



LA9G3601

Straight terminal extensions

Description	Suitable for	Compatible with contactors	Quantity Set of	Reference
Straight terminal extension	3P	LC1G115...LC1G225	3	**LA9G3601**
		LC1G265...LC1G500	3	**LA9G3602**
		LC1G630...LC1G800	3	**LA9G3603**
	4P	LC1G115...LC1G225	4	**LA9G4601**
		LC1G265...LC1G500	4	**LA9G4602**
		LC1G630...LC1G800	4	**LA9G4603**

Right angled terminal extensions

Description	Suitable for	Compatible with contactors	Quantity Set of	Reference
Right angled side terminal extension	3P	LC1G115...LC1G225	3	**LA9G3661**
		LC1G265...LC1G500	3	**LA9G3662**
		LC1G630...LC1G800	3	**LA9G3663**
Right angled large terminal extension	3P	LC1G115...LC1G225	3	**LA9G3671**
		LC1G265...LC1G500	3	**LA9G3672**
		LC1G630...LC1G800	3	**LA9G3673**
Right angled rear terminal extension	3P	LC1G115...LC1G225	3	**LA9G3681**
		LC1G265...LC1G500	3	**LA9G3682**
		LC1G630...LC1G800	3	**LA9G3683**

PB121620.eps



LA9G3682

Edgewise terminal extensions

Description	Suitable for	Compatible with contactors	Quantity Set of	Reference
Edgewise terminal extension	3P	LC1G115...LC1G225	3	**LA9G3631**
		LC1G265...LC1G500	3	**LA9G3632**
		LC1G630...LC1G800	3	**LA9G3633**
	4P	LC1G115...LC1G225	4	**LA9G4631**
		LC1G265...LC1G500	4	**LA9G4632**
		LC1G630...LC1G800	4	**LA9G4633**

PB121577.eps



LA9G3631

PB121578.eps



LA9G3611

Power terminals

Spreader kits

Description	Suitable for	Compatible with contactors	Increase of Pole pitch	Quantity Set of	Reference
Spreader kits	3P	LC1G115...LC1G225	35 to 45 mm	3	**LA9G3611**
		LC1G265...LC1G500	45 to 70 mm	3	**LA9G3612**
	4P	LC1G115...LC1G225	35 to 45 mm	4	**LA9G4611**
		LC1G265...LC1G500	45 to 70 mm	4	**LA9G4612**

PB121648.eps



LA9G3613

Terminal extensions for larger power connections

Description	Suitable for	Compatible with contactors	Power connection size	Quantity Set of	Reference
Terminal connections	3P	LC1G400...LC1G500	50 mm width	3	**LA9G3613**
		LC1G630...LC1G800	80 mm width	3	**LA9G3614**
	4P	LC1G400...LC1G500	50 mm width	4	**LA9G4613**
		LC1G630...LC1G800	80 mm width	4	**LA9G4614**

PB121651.eps



LA9G4711

Spreader kits suitable for box type connectors

Description	Suitable for	Compatible with contactors	Increase of Pole pitch	Suitable for box connectors	Quantity Set of	Reference
Spreader kits for box connectors	3P	LC1G115...LC1G225	35 to 45 mm	DZ2 FJ1/FH1 & AL400	3	**LA9G3711**
		LC1G265...LC1G500	45 to 70 mm	DZ2 FJ1/FK1 & AL400/AL600	3	**LA9G3712**
		LC1G630...LC1G800	70 to 80 mm	DZ2 FL1/FK1 & Type S/AL600	3	**LA9G3714**
	4P	LC1G115...LC1G225	35 to 45 mm	DZ2 FJ1/FH1 & AL400	4	**LA9G4711**
		LC1G265...LC1G500	45 to 70 mm	DZ2 FJ1/FK1 & AL400/AL600	4	**LA9G4712**
		LC1G630...LC1G800	70 to 80 mm	DZ2 FL1/FK1 & Type S/AL600	4	**LA9G4714**

Power terminal accessories

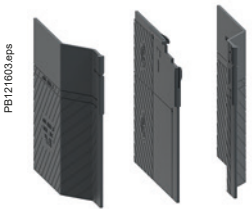
PB121603.eps
LA9G4803

Phase separators

Description	Suitable for	Compatible with contactors	Quantity Set of	Reference
Phase separators (1)	3P	LC1G115...LC1G800	2	**LA9G3801**
	4P	LC1G115...LC1G800	3	**LA9G4801**
	3P – with 50/80 mm spreaders	LC1G400...LC1G800	2	**LA9G3803** (2)
	4P – with 50/80 mm spreaders	LC1G400...LC1G800	3	**LA9G4803** (3)


PB121666.eps
LA9G4701

Terminal shrouds

Description	Compatible with contactors	Quantity Set of	Reference	
			3P	4P
IP 20 Terminal shrouds (1)	LC1G115...LC1G225	1	**LA9G3701**	**LA9G4701**
	LC1G265...LC1G500	1	**LA9G3702**	**LA9G4702**
	LC1G630...LC1G800	1	**LA9G3703**	**LA9G4703**


PB121621.eps
LA9G4707

IP20 Lug cover for connection kits (4)

Lug covers are used along with IP 20 terminal shrouds and star-delta, reverser and changeover connection kit assemblies to improve insulation of the coupling bars and achieve IP 20 for the complete assembly.

IP20 Lug cover for connection kits

Description	Suitable for	Compatible with contactors	Quantity Set of	Reference
IP 20 Lug cover	3P	LC1G115...LC1G800 (4)	6	**LA9G3707**
	4P	LC1G115...LC1G800 (4)	8	**LA9G4707**


PB121586.eps
LV429252

Lugs for cable set

Description	Compatible with contactors	Cable section	Reference	
			Set of 3 for 3P	Set of 4 for 4P
Lugs for cable	LC1G115...LC1G225	120 mm²	**LV429252**	**LV429256**
	LC1G115...LC1G225	150 mm²	**LV429253**	**LV429257**
	LC1G115...LC1G225	185 mm²	**LV429254**	**LV429258**
	LC1G265...LC1G500	240 mm²	**LV432500**	**LV432501**
	LC1G265...LC1G500	300 mm²	**LV432502**	**LV432503**

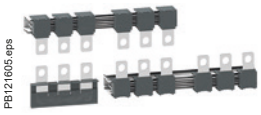
PB121605.eps
LA9GQQ330

Star-Delta (Wye-Delta) connection kits (5)

Description	Suitable for	for Line (KM2) and Delta (KM3) contactor	+ Star contactor (KM1)	Reference
Connection kit: bars for Line-Delta-Star contactor assembly	3P	LC1G115...LC1G225	LC1G115...LC1G225	**LA9GQQ330**
		LC1G265...LC1G500	LC1G115...LC1G225	**LA9GSQ330**
		LC1G265...LC1G500	LC1G265...LC1G500	**LA9GSS330**
		LC1G630...LC1G800	LC1G265...LC1G500	**LA9GTS330**
		LC1G630...LC1G800	LC1G630...LC1G800	**LA9GTT330**
	with cable memory kit 3P	LC1G265...LC1G500	LC1G115...LC1G225	**LA9GSQ331**
		LC1G630...LC1G800	LC1G265...LC1G500	**LA9GTS331**

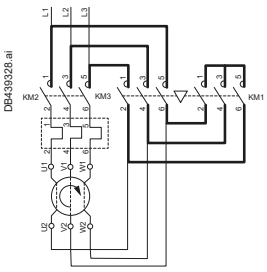

DB439328.ai

Mechanical interlock

Description	Suitable for	Compatible with contactors		Reference
		Contactor 1	Contactor 2	
Mechanical interlock between contactors (6)	3P and 4P	LC1G115...225	LC1G115...225	**LA9G970**
		LC1G265...500	LC1G265...500	**LA9G970**
		LC1G265...500	LC1G115...225	**LA9G971**
	3P	LC1G630...800	LC1G265...500	**LA9G972**
		LC1G630...800	LC1G630...800	**LA9G973**


PB121749.eps
LA9G970

Note: ***RE17RMMWS*** *timer to be used for Star-Delta starter application.*

(1) Either phase separators or terminal shrouds can only be mounted. Phase separators or terminal shrouds are mandatory for operational voltage, Ue ≥ 690 V.
(2) To be used with ***LA9G3613*** *and* ***LA9G3614****.*
(3) To be used with ***LA9G4613*** *and* ***LA9G4614****.*
(4) 2 sets of IP20 lug covers are needed for assemblies with ***LC1G630*** *and* ***LC1G800*** *contactors.*
(5) UL listed.
(6) Maximum 3 auxiliary contacts can be installed between 2 contactors with mechanical interlock kit.

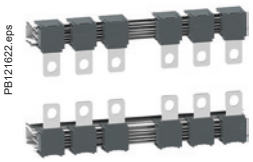

LA9G3760

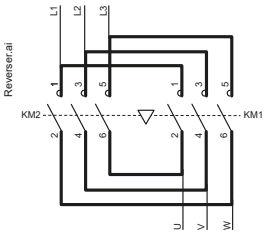

Reverser connection kits

Description	Suitable for	Compatible with contactors	Reference
Connection kit: bars for reverser contactor assembly	3P	LC1G115...LC1G225	**LA9G3760**
		LC1G265...LC1G500	**LA9G3761**
		LC1G630...LC1G800	**LA9G3762**



LA9G3750

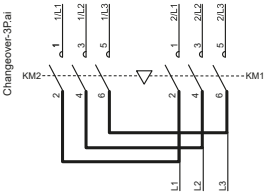

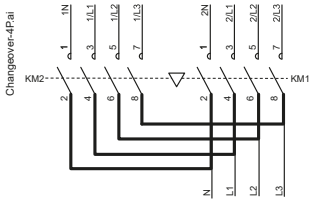

Changeover connection kits

Description	Suitable for	Compatible with contactors	Reference
Connection kit: bars for changeover contactor assembly	3P	LC1G115...LC1G225	**LA9G3750**
		LC1G265...LC1G500	**LA9G3751**
		LC1G630...LC1G800	**LA9G3752**
	4P	LC1G115...LC1G225	**LA9G4750**
		LC1G265...LC1G500	**LA9G4751**
		LC1G630...LC1G800	**LA9G4752**



RE17RMMWS

Modular timer relay for star-delta starters

- 8 A, 1 CO, multifunction with spring terminals, 12...240 V AC/DC
- 17.5 mm width same size as a 1-pole circuit breaker
- Covers 0.1 s to 100 h timing
- Transparent cover to protect settings from being tampered
- Multi functional gives flexibility in maintenance

Modular timer relay for star-delta starters

Description	Suitable for	Compatible with contactors	Reference
Harmony, Modular timing relay	3P	LC1G115...LC1G800	**RE17RMMWS**

PB121741.eps



LA9GRFB1

PB121742.eps



LA9GRFB2

PB121743.eps



LA9GRFB3

Retrofit bases

- Suitable for 3 pole contactors
- Retrofit bases to replace similar ratings of TeSys F contactors with TeSys Giga High power contactors
- Enables quick and simple replacement in the existing installation
- 3 references to cover ranges from LC1F115 to F800

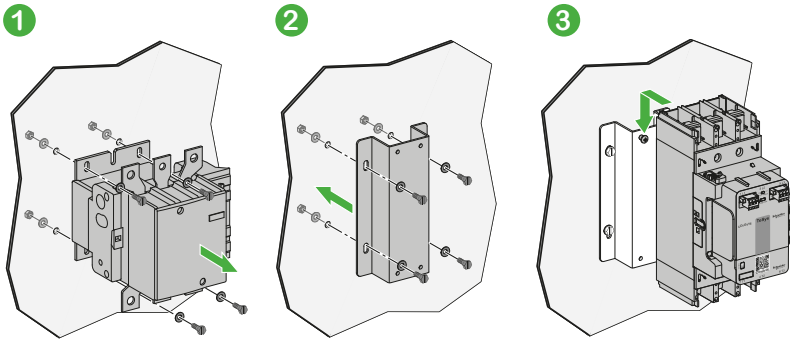

Remove
TeSys F contactor

Install
Retrofit base

Mount TeSys Giga Contactor
on Retrofit base

TeSys Giga retrofit bases are designed for integrating new TeSys Giga High power contactors into installations using TeSys F contactors. The retrofit bases help reduce replacement and reinstallation time when you upgrade your system with the new range of contactors. The bases come in two frame sizes.

Retrofit bases

Description		Reference
Accessory used to replace TeSys F contactors	LC1F115-225 replaced by LC1G115-225	**LA9GRFB1**
	LC1F265-500 replaced by LC1G265-500	**LA9GRFB2**
	LC1F630-800 replaced by LC1G630-800	**LA9GRFB3**

High power contactors

Dimensions/mounting:
page B9/33

PB121644.eps



LX1G3QLSEA

Control module

Wide band electronic control
24 V…500 V 50/60 Hz or DC control input
Advanced and standard versions
Accessible from the front for easy and quick replacement

The control module is needed for the operation of the contactor.
It performs the following functions:
- proper functioning of contactor based on the input control voltage
- monitoring and diagnostics of the pole condition
- generation of signaling commands.

The range of control modules is organized:
- per contactor size and for each rating,
- per control voltage range.

Each module has connectors for connecting:
- the coil control A1, A2 circuit & PLC output control (advanced version)
- pole status and diagnostic signaling circuits.

PB121744.eps



Control module replacement on a 3-pole contactor

Control modules

Description		For contactors	References per voltage range (V AC/DC)		
			24 - 48	48 - 130	200 - 500
Control modules for Advanced contactors	3-pole	LC1G115...LC1G225	**LX1G3QBEEA**	**LX1G3QEHEA**	**LX1G3QLSEA**
		LC1G265...LC1G330	**LX1G3RBEEA**	**LX1G3REHEA**	**LX1G3RLSEA**
		LC1G400...LC1G500	**LX1G3SBEEA**	**LX1G3SEHEA**	**LX1G3SLSEA**
		LC1G630...LC1G800	-	**LX1G3TEHEA**	**LX1G3TLSEA**
	4-pole	LC1G115...LC1G225	**LX1G4QBEEA**	**LX1G4QEHEA**	**LX1G4QLSEA**
		LC1G265...LC1G330	**LX1G4RBEEA**	**LX1G4REHEA**	**LX1G4RLSEA**
		LC1G400...LC1G500	**LX1G4SBEEA**	**LX1G4SEHEA**	**LX1G4SLSEA**
		LC1G630...LC1G800	-	**LX1G4TEHEA**	**LX1G4TLSEA**
			48 - 130	100 - 250	
Control modules for Standard contactors	3-pole	LC1G115...LC1G225	**LX1G3QEHEN**	**LX1G3QKUEN**	
		LC1G265...LC1G330	**LX1G3REHEN**	**LX1G3RKUEN**	
		LC1G400...LC1G500	**LX1G3SEHEN**	**LX1G3SKUEN**	
		LC1G630...LC1G800	**LX1G3TEHEN**	**LX1G3TKUEN**	
	4-pole	LC1G115...LC1G225	**LX1G4QEHEN**	**LX1G4QKUEN**	
		LC1G265...LC1G330	**LX1G4REHEN**	**LX1G4RKUEN**	
		LC1G400...LC1G500	**LX1G4SEHEN**	**LX1G4SKUEN**	
		LC1G630...LC1G800	**LX1G4TEHEN**	**LX1G4TKUEN**	

LA9G81_ISO.eps



LA9G81

Connector for control module

Description	Reference
Push-in terminal connector for control module	**LA9G81**

LA9GRDK_ISO.eps



LA9GRD10

Remote wear diagnostic (RWD) module

Description	Reference
Remote wear diagnostic module for TeSys Giga Contactor - 1 NO	**LA9GRD10** (1)
Remote wear diagnostic module for TeSys Giga Contactor - 1 NC	**LA9GRD01** (1)

(1) Remote Wear Diagnostic (RWD) Module, can be installed and used only in Advanced version.

PB121588.eps



Switching module kits

Replaceable switching modules

- Innovative contact switching modules for TeSys Giga High power contactors
- Replace worn-out poles with a new switching module in minutes, without having to disassemble the whole product
- No special tools are needed for the replacement.

TeSys Giga - Switching modules for TeSys Giga High power contactors , Advanced and Standard versions

Description	For contactors		Quantity Set of	Reference
3 or 4 switching module kits	3-pole	LC1G115...LC1G225	3	**LA9G3QA**
		LC1G265...LC1G330	3	**LA9G3RA**
		LC1G400...LC1G500	3	**LA9G3SA**
		LC1G630...LC1G800	3	**LA9G3TA**
	4-pole	LC1G115...LC1G225	4	**LA9G4QA**
		LC1G265...LC1G330	4	**LA9G4RA**
		LC1G400...LC1G500	4	**LA9G4SA**
		LC1G630...LC1G800	4	**LA9G4TA**

Note: *In the event of replacement, replace all switching modules. After replacement, change the position of RESET button on the control module from A to B or B to A.*

Product references

LA9G3101	LA9G3TA	LA9GTT330	LC1G265BEEA	LC1G800LSEA
LA9G3102	LA9G4101	LAG8N113	LC1G265EHEA	LV429252
LA9G3103	LA9G4102	LAG8N113P	LC1G265EHEN	LV429253
LA9G3111	LA9G4103	LAG8N203	LC1G265KUEN	LV429254
LA9G3112	LA9G4111	LAG8N203P	LC1G265LSEA	LV429256
LA9G3113	LA9G4112	LC1G1154BEEA	LC1G3304BEEA	LV429257
LA9G3601	LA9G4113	LC1G1154EHEA	LC1G3304EHEA	LV429258
LA9G3602	LA9G4601	LC1G1154EHEN	LC1G3304EHEN	LV432500
LA9G3603	LA9G4602	LC1G1154KUEN	LC1G3304KUEN	LV432501
LA9G3611	LA9G4603	LC1G1154LSEA	LC1G3304LSEA	LV432502
LA9G3612	LA9G4611	LC1G115BEEA	LC1G330BEEA	LV432503
LA9G3613	LA9G4612	LC1G115EHEA	LC1G330EHEA	LX1G3QBEEA
LA9G3614	LA9G4613	LC1G115EHEN	LC1G330EHEN	LX1G3QEHEA
LA9G3631	LA9G4614	LC1G115KUEN	LC1G330KUEN	LX1G3QEHEN
LA9G3632	LA9G4631	LC1G115LSEA	LC1G330LSEA	LX1G3QKUEN
LA9G3633	LA9G4632	LC1G1504BEEA	LC1G4004BEEA	LX1G3QLSEA
LA9G3650	LA9G4633	LC1G1504EHEA	LC1G4004EHEA	LX1G3RBEEA
LA9G3651	LA9G4701	LC1G1504EHEN	LC1G4004EHEN	LX1G3REHEA
LA9G3652	LA9G4702	LC1G1504KUEN	LC1G4004KUEN	LX1G3REHEN
LA9G3653	LA9G4703	LC1G1504LSEA	LC1G4004LSEA	LX1G3RKUEN
LA9G3661	LA9G4707	LC1G150BEEA	LC1G400BEEA	LX1G3RLSEA
LA9G3662	LA9G4711	LC1G150EHEA	LC1G400EHEA	LX1G3SBEEA
LA9G3663	LA9G4712	LC1G150EHEN	LC1G400EHEN	LX1G3SEHEA
LA9G3671	LA9G4714	LC1G150KUEN	LC1G400KUEN	LX1G3SEHEN
LA9G3672	LA9G4750	LC1G150LSEA	LC1G400LSEA	LX1G3SKUEN
LA9G3673	LA9G4751	LC1G1854BEEA	LC1G5004BEEA	LX1G3SLSEA
LA9G3681	LA9G4752	LC1G1854EHEA	LC1G5004EHEA	LX1G3TEHEA
LA9G3682	LA9G4801	LC1G1854EHEN	LC1G5004EHEN	LX1G3TEHEN
LA9G3683	LA9G4803	LC1G1854KUEN	LC1G5004KUEN	LX1G3TKUEN
LA9G3701	LA9G4QA	LC1G1854LSEA	LC1G5004LSEA	LX1G3TLSEA
LA9G3702	LA9G4RA	LC1G185BEEA	LC1G500BEEA	LX1G4QBEEA
LA9G3703	LA9G4SA	LC1G185EHEA	LC1G500EHEA	LX1G4QEHEA
LA9G3704	LA9G4TA	LC1G185EHEN	LC1G500EHEN	LX1G4QEHEN
LA9G3705	LA9G81	LC1G185KUEN	LC1G500KUEN	LX1G4QKUEN
LA9G3706	LA9G82	LC1G185LSEA	LC1G500LSEA	LX1G4QLSEA
LA9G3707	LA9G970	LC1G2254BEEA	LC1G6304EHEA	LX1G4RBEEA
LA9G3711	LA9G971	LC1G2254EHEA	LC1G6304EHEN	LX1G4REHEA
LA9G3712	LA9G972	LC1G2254EHEN	LC1G6304KUEN	LX1G4REHEN
LA9G3714	LA9G973	LC1G2254KUEN	LC1G6304LSEA	LX1G4RKUEN
LA9G3750	LA9GQQ330	LC1G2254LSEA	LC1G630EHEA	LX1G4RLSEA
LA9G3751	LA9GRD01	LC1G225BEEA	LC1G630EHEN	LX1G4SBEEA
LA9G3752	LA9GRD10	LC1G225EHEA	LC1G630KUEN	LX1G4SEHEA
LA9G3760	LA9GRFB1	LC1G225EHEN	LC1G630LSEA	LX1G4SEHEN
LA9G3761	LA9GRFB2	LC1G225KUEN	LC1G8004EHEA	LX1G4SKUEN
LA9G3762	LA9GRFB3	LC1G225LSEA	LC1G8004EHEN	LX1G4SLSEA
LA9G3801	LA9GSQ330	LC1G2654BEEA	LC1G8004KUEN	LX1G4TEHEA
LA9G3803	LA9GSQ331	LC1G2654EHEA	LC1G8004LSEA	LX1G4TEHEN
LA9G3QA	LA9GSS330	LC1G2654EHEN	LC1G800EHEA	LX1G4TKUEN
LA9G3RA	LA9GTS330	LC1G2654KUEN	LC1G800EHEN	LX1G4TLSEA
LA9G3SA	LA9GTS331	LC1G2654LSEA	LC1G800KUEN	

This document is current. Click on the product reference to get the most recent availability status (hyperlink to **se.com** product datasheet).
If your product variant is no longer available, please consult your distributor or regional sales office.

Technical Data for Designers

Contents

TeSys Giga High power contactors:
> Characteristics ..... B9/25 to B9/29
> Dimensions ..... B9/30 to B9/33
> Diagrams B9/34

Characteristics

Environment

Contactor type				LC1G115… 225	LC1G265… 500	LC1G630… 800
Rated insulation voltage (Ui)	Conforming to IEC 60947-4-1. Over-voltage category III, degree of pollution: 3		**V**	1000	1000	1000
Rated impulse withstand voltage (Uimp)	Coil not connected to the power circuit		**kV**	8	8	8
Conforming to standards				IEC/EN 60947-4-1, UL 60947-4-1, CSA C22.2 n° 60947-4-1, JIS C 8201-4-1, GB/T 14048.4, IEC 60721-3-3 3C3		
Product certifications				CB scheme, CCC, cULus, UKCA, EAC, EU-RO-MR by DNV		
Electromagnetic compatibility				IEC 60947-4-1		
Immunity				Following IEC 60947-4-1 Table 16		
Emission				Environment A according to IEC 60947-4-1		
Immunity to radiated electromagnetic interference				20V/m according to IEC/EN 61000-4-3		
Voltage sag immunity (in complete product as well)				Conforming to SEMI-F47		
Degree of protection	Conforming to IEC 60529 / VDE 0106			IP2x with terminal shrouds LA9G37●●/ LA9G47●●		
Climatic withstand				According to IACS E10		
Ambient air temperature around the device	Storage		**°C**	-60…+80		
	Operation		**°C**	-25…+60		
	Permissible at Uc		**°C**	-40…+70		
Net weight	Standard	3P	**kg**	3.6	7.5	14.2
		4P	**kg**	4.4	8.2	18
	Advanced	3P	**kg**	4.1	8.2	17.3
		4P	**kg**	5.1	8.7	22
Maximum operating altitude	Without derating		**m**	3000		
Operating positions	Without derating			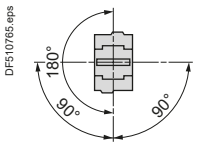 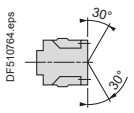		
	With derating (1)			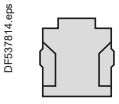 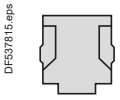		
Shock resistance 1/2 sine wave = 11 ms Conforming to IEC 60068-2-7	Contactor open			10 gn	10 gn	10 gn
	Contactor closed			15 gn	15 gn	15 gn
Vibration resistance 5…300 Hz Conforming to IEC 60068-2-6	Contactor open			2 gn	2 gn	2 gn
	Contactor closed			4 gn	4 gn	4 gn

(1) For derating details, please contact technical support.

COORD.
Ref.
High power contactors

Characteristics

Pole characteristics

Contactor type					LC1G115	LC1G150	LC1G185	LC1G225
Number of poles					3 or 4	3 or 4	3 or 4	3 or 4
Rated operational current (Ie)	Ue ≤ 400 V	3P	In AC-3 / AC-3e, θ ≤ 60 °C	**A**	115 / 115	150 / 145	185 / 177	225 / 209
	Ue ≤ 1000 V	3P & 4P	In AC-1, θ ≤ 40 °C	**A**	250	275	305	330
Rated operational voltage (Ue)		Up to		**V**	1000 (1)	1000	1000	1000
Rated frequency (f) (2)				**Hz**	50 / 60	50 / 60	50 / 60	50 / 60
Frequency operating limits		With derating (3)		**Hz**	$16^{2/3}$…400	$16^{2/3}$…400	$16^{2/3}$…400	$16^{2/3}$…400
Conventional thermal current		θ ≤ 40 °C		**A**	250	275	305	330
Rated making capacity		I rms conforming to IEC 60947-4-1		**A**	Making current: 10 x I in AC-3 or 12 x I in AC-4 Making current: 13 x I in AC-3e			
Rated breaking capacity		I rms conforming to IEC 60947-4-1		**A**	Making and breaking current: 8 x I in AC-3 or 10 x I in AC-4 Making and breaking current: 8.5 x I in AC-3e			
Maximum permissible current No current flowing for previous 60 minutes, at θ ≤ 40 °C		For 10 s		**A**	1100	1200	1500	1800
		For 30 s		**A**	640	700	920	1000
		For 1 min		**A**	520	600	740	850
		For 3 min		**A**	400	450	500	560
		For 10 min		**A**	320	350	400	440
Short-circuit protection by fuses		Fuses for motor: type aM - Ue ≤ 440 V		**A**	125	160	200	250
		Fuses for motor: type aM - Ue ≤ 690 V		**A**	125	160	160	200
		Fuses for general application: type gG - Ue ≤ 690 V		**A**	315	315	315	400
Average impedance per pole		At Ith and 50 Hz		**mΩ**	0.18	0.18	0.17	0.15
Power dissipation per pole for the above operational currents		AC-3 / AC-3e		**W**	3	5	6	8
		AC-1		**W**	10	10	20	20
Connection					Maximum c.s.a.			
		Bar	Number of bars		2	2	2	2
			Bar	**mm**	25 x 6	25 x 6	25 x 6	25 x 6
		Cable with lug		**mm²**	185	185	185	185
		Cable with connector		**mm²**	185	185	185	185
		Bolt diameter		**mm**	Ø8.5	Ø8.5	Ø8.5	Ø8.5
Tightening torque		Power circuit connections		**N.m**	18	18	18	18

(1) Ue ≤ 1000 V for AC-1 / Ue ≤ 690 V for AC-3 / AC-3e / AC-4.
(2) Please consult your technical support team for application with frequencies other than 50/60 Hz.
(3) For derating details, please contact technical support.

COORD.
Ref.
High power contactors

Characteristics

Pole characteristics

LC1G265	LC1G330	LC1G400	LC1G500	LC1G630	LC1G800
3 or 4	3 or 4	3 or 4	3 or 4	3 or 4	3 or 4
265 / 255	330 / 294	400 / 391	500 / 437	630 / 555	800 / 587
385	440	550	700	1050	1050
1000	1000	1000	1000	1000	1000
50 / 60	50 / 60	50 / 60	50 / 60	50 / 60	50 / 60
$16^{2/3}$…400	$16^{2/3}$…400	$16^{2/3}$…400	$16^{2/3}$…400	$16^{2/3}$…400	$16^{2/3}$…400
385	440	550	700	1050	1050
Making current: 10 x I in AC-3 or 12 x I in AC-4 Making current: 13 x I in AC-3e					
Making and breaking current: 8 x I in AC-3 or 10 x I in AC-4 Making and breaking current: 8.5 x I in AC-3e					
2200	2650	3600	4000	5050	5500
1230	1800	2400	2800	4400	4600
950	1300	1700	2200	3400	3600
620	900	1200	1500	2200	2600
480	750	1000	1200	1600	1700
315	400	500	500	630	800
250	250	315	400	500	630
400	500	630	800	1250	1250
0.144	0.144	0.1	0.08	0.065	0.065
11	16	16	20	26	42
20	30	30	40	70	70
Maximum c.s.a.					
2	2	2	2	2	2
32 x 10	32 x 10	32 x 10	32 x 10	52 x 20	52 x 20
240	2 x 150	2 x 185	2 x 240	-	-
240	-	-	-	-	-
Ø10.6	Ø10.6	Ø10.6	Ø10.6	Ø13	Ø13
35	35	35	35	58	58

COORD.
Ref.
High power contactors

Coordination tables: pages A5/7 to A5/42
References: pages B9/10 to B9/21
Dimensions: pages B9/30 to B9/32
Diagrams: page B9/34

Characteristics

TeSys Giga High power contactors - Advanced version - Control circuit characteristics with AC/DC coils

Contactor type					LC1G115…225	LC1G265…330	LC1G400…500	LC1G630…800
Rated control circuit voltage (Uc)				**V**	24...48 AC/DC, 48...130 AC/DC, 200...500 AC/DC (1)			
Control voltage limits (θ ≤ 60 °C)	AC input (50/60 Hz) /DC input	Operation			0.8 Uc Min...1.1 Uc Max			
		Drop-out			0.1 Uc Max...0.45 Uc Min			
Inputs compatibility PLC digital output 24 V DC Type 3 IEC61131-2		Off-state		**V DC**	0…5			
		On-state		**V DC**	11…30			
Average consumption at 20 °C and at Uc (3 and 4-pole contactors)	24…48 V AC/DC coil (BEE)	Inrush	50/60 Hz coil	**VA**	290	540	490	-
			DC	**W**	220	380	350	-
		Sealed	50/60 Hz coil	**VA**	10	17.9	17.9	-
			DC	**W**	5.7	6.4	6	-
	48...130 V AC/DC coil (EHE)	Inrush	50/60 Hz coil	**VA**	260	430	450	560
			DC	**W**	190	360	360	440
		Sealed	50/60 Hz coil	**VA**	8.9	11.7	11.7	12
			DC	**W**	5	9	8.3	8.8
	200…500 V AC/DC coil (LSE)	Inrush	50/60 Hz coil	**VA**	295	530	535	670
			DC	**W**	215	300	300	390
		Sealed	50/60 Hz coil	**VA**	13	16.1	15.4	17
			DC	**W**	8	9	8.6	11
Heat dissipation				**W**	4…5	5…6	5…6	5…6
Operating time	Closing "C"			**ms**	40...70	40...70	40...70	40...70
	Opening "O"			**ms**	15...50	15...50	15...50	15...50
Mechanical durability at Uc	In millions of operating cycles (max)				8	8	8	5
Maximum operating rate at ambient temperature ≤ 60 °C	In operating cycles per hour		AC-1		300	300	300	300
			AC-3		500	500	500	500
			AC-4		150	150	60	60
Coil control and PLC input connection (Push-in type)					Min/max c.s.a.			
	Flexible cable	1 conductor with cable end		**mm²**	0.25...2.5	0.25...2.5	0.25...2.5	0.25...2.5
		2 conductors with Dual Sleeve		**mm²**	0.5...1	0.5...1	0.5...1	0.5...1
	Solid cable	1 conductor		**mm²**	0.2...2.5	0.2...2.5	0.2...2.5	0.2...2.5
		Stripping length		**mm**	12	12	12	12

(1) 24...48 V AC/DC control voltage option is available for LC1G115...LC1G500 ratings.

COORD.
Ref.
High power contactors

TeSys Giga High power contactors - Standard version control circuit characteristics with AC/DC coils

Contactor type					LC1G115…225	LC1G265…330	LC1G400…500	LC1G630…800
Rated control circuit voltage (Uc)				V	48...130 AC/DC, 100...250 AC/DC			
Control voltage limits (θ ≤ 60 °C)	AC input (50/60 Hz) /DC input	Operation			0.8 Uc Min...1.1 Uc Max (1)			
		Drop-out			0.1 Uc Max...0.45 Uc Min			
Average consumption at 20 °C and at Uc (3 and 4-pole contactors)	48...130 V AC/DC coil (EHE)	Inrush	50/60 Hz coil	VA	640	780	965	990
			DC	W	445	695	760	790
		Sealed	50/60 Hz coil	VA	18.7	17.6	17.6	18.7
			DC	W	7.8	7.8	7.8	9.5
	100...250 V AC/DC coil (KUE)	Inrush	50/60 Hz coil	VA	540	700	750	800
			DC	W	380	645	660	680
		Sealed	50/60 Hz coil	VA	12.4	15	15.5	15
			DC	W	7.8	9.1	9.3	9.5
Heat dissipation				W	5…6	6…7	6…7	6…7
Operating time	Closing "C"			ms	40...70	40...70	40...70	40...70
	Opening "O"			ms	15...50	15...50	15...50	15...50
Mechanical durability at Uc	In millions of operating cycles (max)				8	8	8	5
Maximum operating rate at ambient temperature ≤ 60 °C	In operating cycles per hour	AC-1			300	300	300	300
		AC-3			500	500	500	500
		AC-4			150	150	60	60
Coil control connection (Push-in type)					Min/max c.s.a.			
Flexible cable	1 conductor with cable end			mm²	0.25...2.5	0.25...2.5	0.25...2.5	0.25...2.5
	2 conductors with Dual Sleeve			mm²	0.5...1	0.5...1	0.5...1	0.5...1
Solid cable	1 conductor			mm²	0.2...2.5	0.2...2.5	0.2...2.5	0.2...2.5
	Stripping length			mm	12	12	12	12

(1) 0.7 Uc Min for 110 V DC input (with KUE coil).

COORD.
Ref.
High power contactors

Dimensions

Advanced LC1G115...225 TeSys Giga High power contactors

3-pole

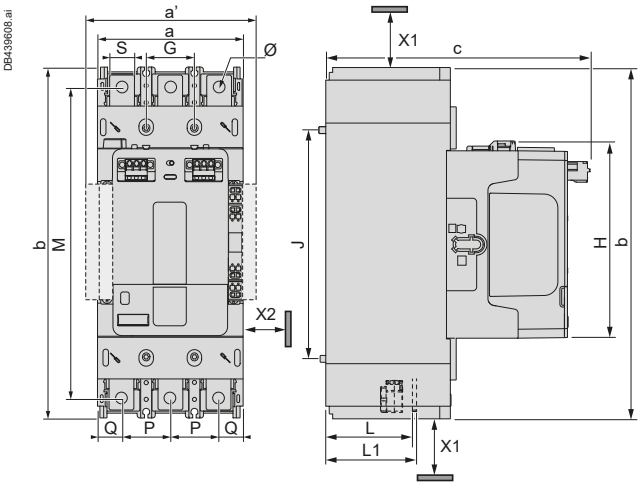

All dimensions are in mm.

a	b	c	G	J	M	H	L	L1	P	Q	S	Ø
107.7	254.7	192.9	35	166	225.7	144.1	63.9	66.9	35	18.9	18	8.5

4-pole

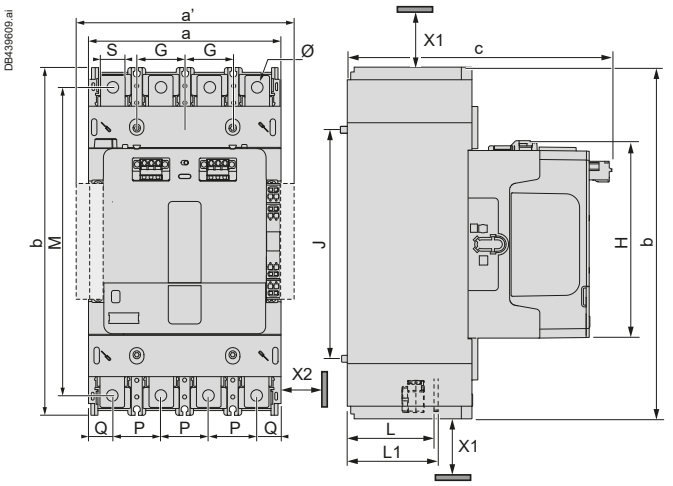

All dimensions are in mm.

a	b	c	G	J	M	H	L	L1	P	Q	S	Ø
142.7	254.7	192.9	35	166	225.7	144.1	63.9	66.9	35	18.9	18	8.5

X1 (mm) = Minimum electrical clearance.
LC1G115…800, up to 1000 V: 40 mm
X2 (mm) = Minimum electrical clearance according to operating voltage inside metallic cabinets / adjacent installation of contactors.
LC1G115…800: 5 mm.

a' = a + 20 mm with additional auxiliary contact blocks on both sides (externally).

Standard LC1G115...225 TeSys Giga High power contactors

3-pole

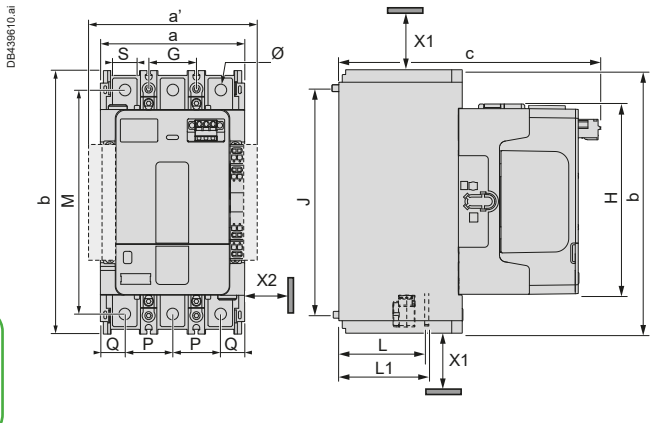

All dimensions are in mm.

a	b	c	G	J	M	H	L	L1	P	Q	S	Ø
107.7	193	192.9	35	166	164.1	139.4	66.9	69.9	35	18.9	18	8.5

4-pole

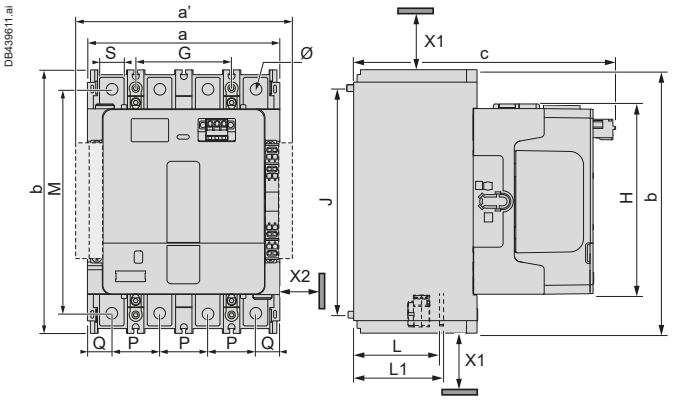

All dimensions are in mm.

a	b	c	G	J	M	H	L	L1	P	Q	S	Ø
142.7	193	192.9	35	166	164.1	139.4	66.9	69.9	35	18.9	18	8.5

X1 (mm) = Minimum electrical clearance.
LC1G115…800, up to 1000 V: 40 mm
X2 (mm) = Minimum electrical clearance according to operating voltage inside metallic cabinets / adjacent installation of contactors.
LC1G115…800: 5 mm.

a' = a + 20 mm with additional auxiliary contact blocks on both sides (externally).

Ref.
High power contactors

Dimensions

Advanced LC1G265...500 TeSys Giga High power contactors

3-pole

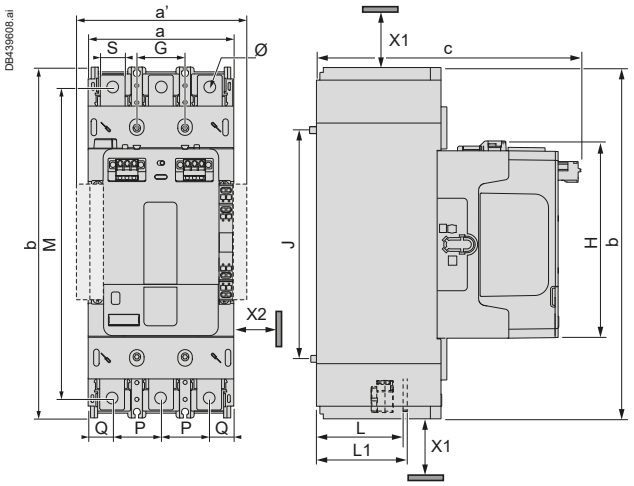

All dimensions are in mm.

a	b	c	G	J	M	H	L	L1	P	Q	S	Ø
140	290	225.5	45	187	261.6	166.7	72.8	78.8	45	25	30	10.6

4-pole

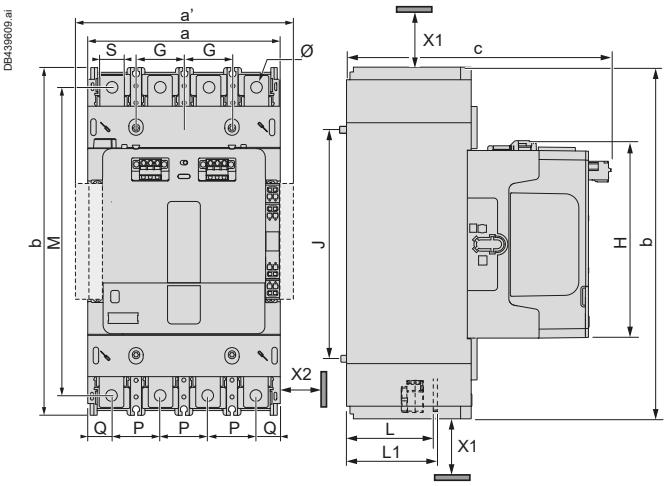

All dimensions are in mm.

a	b	c	G	J	M	H	L	L1	P	Q	S	Ø
185	290	225.5	45	187	261.6	166.7	72.8	78.8	45	25	30	10.6

X1 (mm) = Minimum electrical clearance.
LC1G115…800, up to 1000 V: 40 mm.
X2 (mm) = Minimum electrical clearance according to operating voltage inside metallic cabinets / adjacent installation of contactors.
LC1G115…800: 5 mm.

a' = a + 20 mm with additional auxiliary contact blocks on both sides (externally).

Standard LC1G265...500 TeSys Giga High power contactors

3-pole

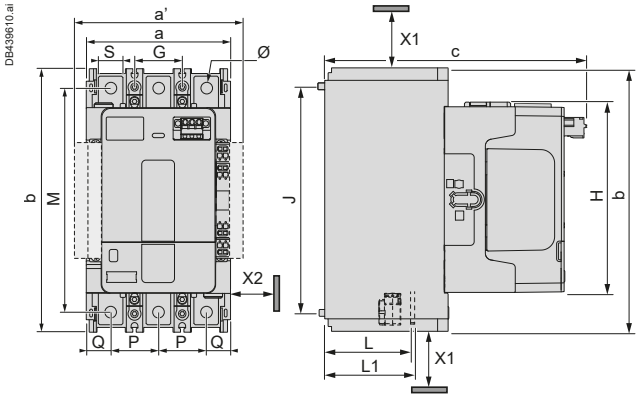

All dimensions are in mm.

a	b	c	G	J	M	H	L	L1
140	225	225.5	45	187	197	161.8	78.8	LC1G265-330: 81.8 LC1G400: 82.8 LC1G500: 83.8

P	Q	S	Ø
45	25	30	10.6

4-pole

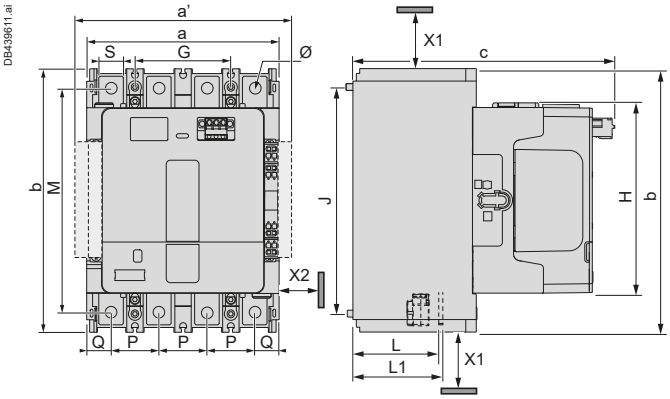

All dimensions are in mm.

a	b	c	G	J	M	H	L	L1
185	225	225.5	45	187	197	161.8	78.8	LC1G265-330: 81.8 LC1G400: 82.8 LC1G500: 83.8

P	Q	S	Ø
45	25	30	10.6

X1 (mm) = Minimum electrical clearance.
LC1G115…800, up to 1000 V: 40 mm.
X2 (mm) = Minimum electrical clearance according to operating voltage inside metallic cabinets / adjacent installation of contactors.
LC1G115…800: 5 mm.

a' = a + 20 mm with additional auxiliary contact blocks on both sides (externally).

References:
pages B9/10 to B9/21
Characteristics:
pages B9/25 to B9/29
Diagrams:
page B9/34

Dimensions

Advanced LC1G630...800 TeSys Giga High power contactors

3-pole

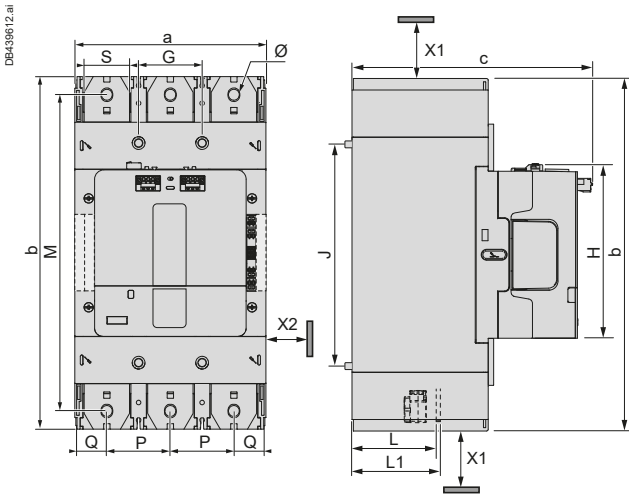

All dimensions are in mm.

a	b	c	G	J	M	H	L	L1	P	Q	S	Ø
210.6	388.5	265.6	70	242	348.5	192.1	99	107	70	35.3	48	13

4-pole

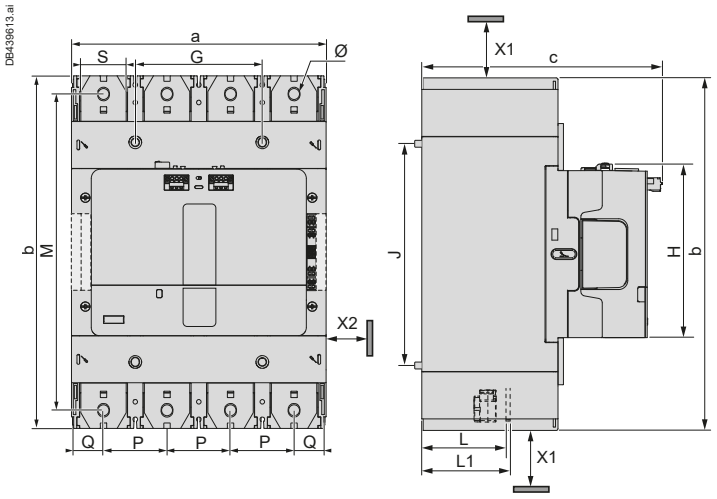

All dimensions are in mm.

a	b	c	G	J	M	H	L	L1	P	Q	S	Ø
280.6	388.5	265.6	70	242	348.5	192.1	99	107	70	35.3	48	13

X1 (mm) = Minimum electrical clearance.
LC1G115…800, up to 1000 V: 40 mm.
X2 (mm) = Minimum electrical clearance according to operating voltage inside metallic cabinets / adjacent installation of contactors.
LC1G115…800: 5 mm.

Standard LC1G630...800 TeSys Giga High power contactors

3-pole

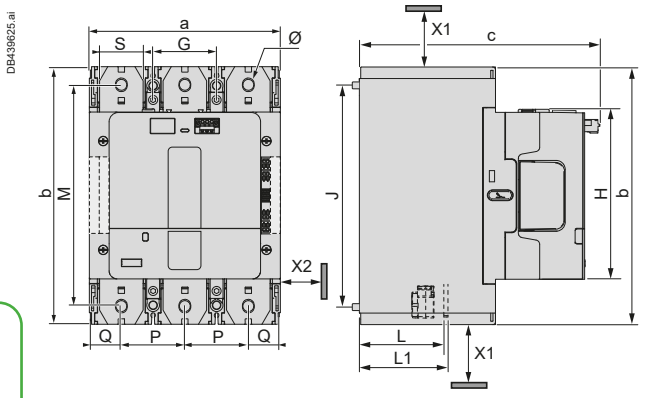

All dimensions are in mm.

a	b	c	G	J	M	H	L	L1	P	Q	S	Ø
210.6	284	265.6	70	242	244	187.4	107	113	70	35.3	48	13

4-pole

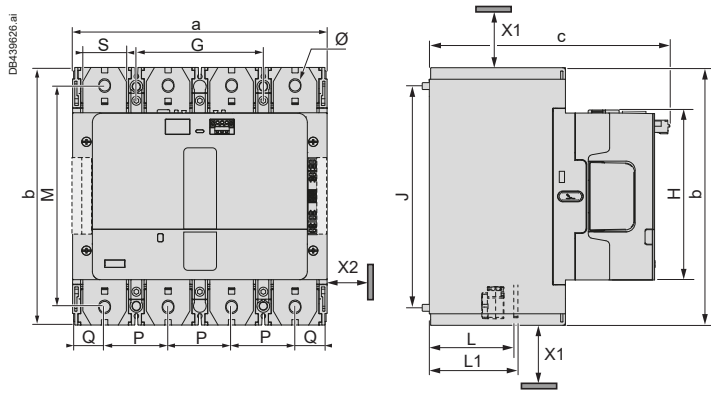

All dimensions are in mm.

a	b	c	G	J	M	H	L	L1	P	Q	S	Ø
280.6	284	265.6	70	242	244	187.4	107	113	70	35.3	48	13

X1 (mm) = Minimum electrical clearance.
LC1G115…800, up to 1000 V: 40 mm.
X2 (mm) = Minimum electrical clearance according to operating voltage inside metallic cabinets / adjacent installation of contactors.
LC1G115…800: 5 mm.

Ref.
High power contactors

Dimensions/mounting

Dimensions

LA9GRBF1

For replacement of F115-225

DB438635.ai

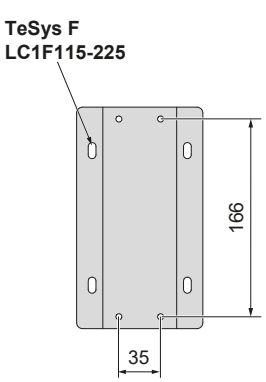

LA9GRBF2

For replacement of F265-500

DB439336.ai

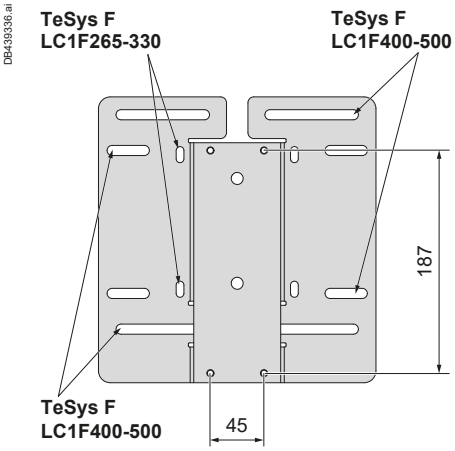

LA9GRBF3

For replacement of F630 and F800

DB439335.eps

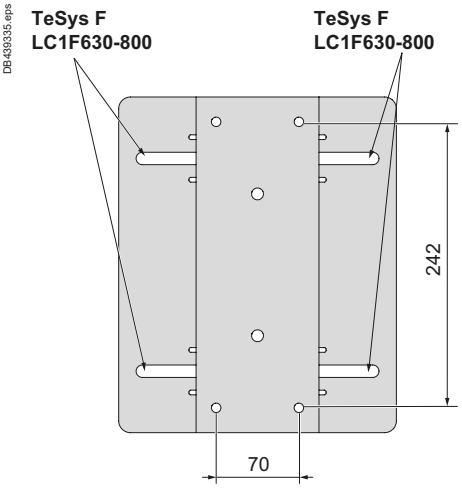

Note: *All dimensions are in mm.*

Ref.
High power contactors

References:
page B9/19

Diagrams

TeSys Giga High power contactors

Advanced version - ON/OFF control by PLC

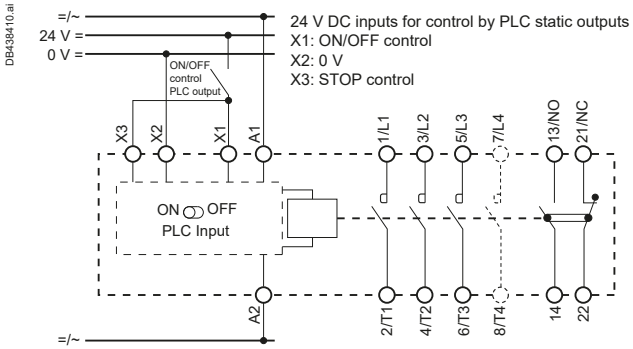

Advanced version - ON/OFF control by PLC in safety application

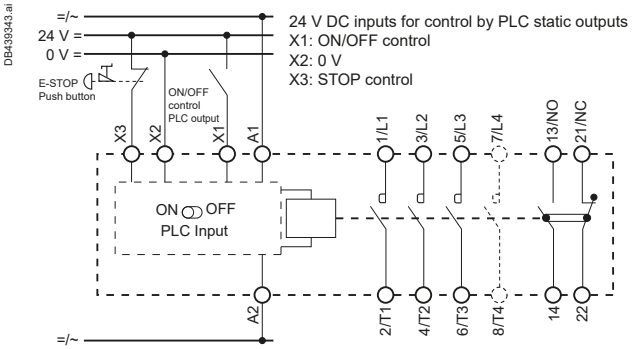

Advanced version - Control by switch

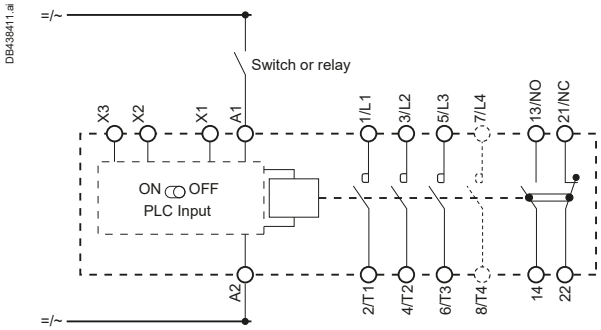

Standard version

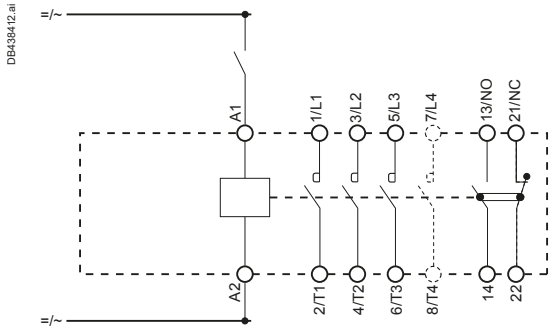

Add-on blocks

Instantaneous auxiliary contacts

1 N/O + 1 N/C	2 N/O	1 N/O + 1 N/C	2 N/O
LAG8N113P **mirror contacts**	**LAG8N203P**	**LAG8N113** **mirror contacts**	**LAG8N203**
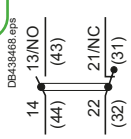	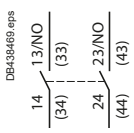	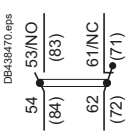	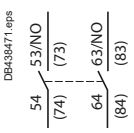

(1) Terminal numbers in brackets refer to blocks when mounted upside down, on left-hand side of contactor.

Ref.
High power contactors

TeSys Control
F High power contactors

Chapter B10

TeSys F, FG, CR1F, V Contactors

Type of product	Range		Pages
TeSys F Contactors for AC-3 applications	780 and 1000 A		B10/2
TeSys F Contactors for AC-1 applications	From 1200 A to 2600 A		B10/3
TeSys FG Shockproof contactors (to be discontinued)	From 150 to 630 A - AC-3		B10/4
TeSys CR1F Magnetic latching contactors	From 150 to 630 A - AC-3		B10/5
TeSys F Auxiliary contact blocks, accessories, spare parts, delayed opening devices			B10/6
TeSys F Coils			B10/11
Accessories, coils for shockproof and magnetic latching contactors TeSys FG (to be discontinued), TeSys CR1F			B10/15
TeSys V Vacuum contactors – 1500 V	From 160 to 610 A - AC-3 From 160 to 630 A - AC-1		B10/22

Technical Data for Designers B10/25

Product references

PB112306.eps



LC1F780

PB121451.eps



LC1F1000

3-pole contactors - Motors 780 to 1000 A / 440 V
Category AC-3 - a.c. or d.c. coils

Standard power ratings of 3-phase motors 50-60 Hz in category AC-3							Rated operational current in AC-3	Basic reference, to be completed by adding the voltage code (1)	Weight
220 V 230 V	380 V 400 V	415 V	440 V	500 V	660 V 690 V	1000 V	440 V up to	Screw fixing, cabling	
kW	kW	kW	kW	kW	kW	kW	A		kg
220	400	425	425	450	475	450	780	**LC1F780●●**	39.500
315	560	630	670	–	–	–	1000	**LC1F1000●●**	31.000

Note: auxiliary contact blocks, modules and accessories: see pages B10/6 to B10/15.

(1) Please check the availability of your variant in the index page B10/24. The SEARCH function of your viewer can be used.

Volts ~	24	48	110	115	120	208	220	230	240	380	400	415	440
LC1F1250													
40…400 Hz (coil LX1)	–	E7	F7	FE7	G7	L7	M7	P7	U7	Q7	V7	N7	R7
LC1F780													
40…400 Hz (coil LX1)	–	–	F7	FE7	F7	L7	M7	P7	U7	Q7	V7	N7	R7
LC1F1000, F1400, F1700, F2100, F2600													
40...400 Hz (coil LX1F)	–	–	F7	–	G7	–	M7	P7	U7	Q7	V7	N7	R7

Volts ⎓	24	48	110	125	220	230	250	400	440
LC1F1250									
(coil LX4F)	–	ED	FD	GD	MD	–	UD	–	RD
LC1F780, LC1F1000, F1400, F1700, F2100, F2600									
(coil LX4F)	–	–	FD	GD	MD	–	UD	–	RD

Volts ~ / ⎓	100...250
LC1SF1200, LC1F1250, F2600	
(coil LXE + ECM LA4EM)	KUE

High power contactors

Life Is On Schneider Electric

Product references

PB107573.eps



LC1F1250

PB107575.eps



LC1F1700...2100

PB114811.eps



LC1F2600

3 or 4-pole contactors - Loads 1200 to 2600 A / 440 V
Category AC-1 - a.c. or d.c. coils

Maximum current in AC-1 (θ ≤ 40 °C)	Number of poles	Basic reference, to be completed by adding the voltage code (1) Screw fixing, cabling	Weight
A			kg
1200	3	**LC1SF1200KUE**	13.400
1260	3	**LC1F1250●●**	19.000
1400	3	**LC1F1400●●**	29.000
1600	3	**LC1F780●●**	39.500
	4	**LC1F7804●●**	48.000
1700	3	**LC1F1700●●**	30.000
2100 (2)	3	**LC1F2100●●**	31.000
2600 (3)	3	**LC1F2600●●**	36.000

Note: *auxiliary contact blocks, modules and accessories: see pages B10/6 to B10/15.*
(1) Please check the availability of your variant in the index page B10/24. The SEARCH function of your viewer can be used.
*(2) With set of right-angled connectors **LA9F2100** (see page B10/9).*
*(3) With set of right-angled connectors **LA9F2600** (see page B10/9).*

High power contactors

Characteristics: pages B10/26 to B10/31
Dimensions: pages B10/32 to B10/35
Schemes: pages B10/36 and B10/37

Product references

PB123832.eps

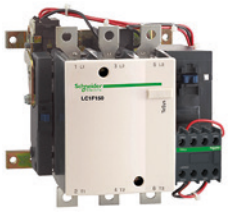

LC1FG150

PB123833.eps



LC1FG185

PB123834.eps



LC1FG265

Important notice: LC1FG range is planned for discontinuation without replacement.
Before ordering, please consult your regional sales office for availability.

3-pole shockproof contactors - Motors 150 to 630 A / 440 V AC-3, loads 250 to 1000 A / 440 V / AC-1 - a.c. coil

Standard power ratings of 3-phase motors 50-60 Hz in category AC-3							Rated operational current in cat. AC-3, 440 V/AC-1 up to	Basic reference, to be completed by adding the voltage code (1)	Weight
220 V 230 V	380 V 400 V	415 V	440 V	500 V	660 V 690 V	1000 V		Screw fixing, cabling (2)	
kW	kW	kW	kW	kW	kW	kW	A		kg
40	75	80	80	90	100	65	150/250	**LC1FG150●●**	3.430
55	90	100	100	110	110	100	185/275	**LC1FG185●●**	4.650
75	132	140	140	160	160	147	265/350	**LC1FG265●●**	7.440
110	200	220	250	257	280	185	400/500	**LC1FG400●●**	9.100
147	250	280	295	355	335	335	500/700	**LC1FG500●●**	11.350
200	335	375	400	400	450	450	630/1000	**LC1FG630●●**	18.600

Note: these contactors have instantaneous auxiliary contact blocks with 2 N/O contacts, 1 N/C contact and one coil maintaining contact.

(1) Please check the availability of your variant in the index page B10/24. The SEARCH function of your viewer can be used.

(2) Power terminals can, if required, be protected against direct finger contact by the addition of shrouds, to be ordered separately.

Characteristics: pages B10/38 to B10/51
Dimensions, schemes: pages B10/54 and B10/55

Product references

PB108372.eps



CR1F1854

PB108370.eps



CR1F500

3, 4 pole - Motors 150 to 630 A / 440 V / AC-3, loads 250 to 1000 A / 440 V AC-1 - a.c. or d.c. coils

Maximum thermal current in category AC-1 40 °C	Rated operational current in category AC-3 (440 V max)	Number of poles	Instantaneous auxiliary contacts		Basic reference, to be completed by adding the voltage code [1]	Weight
A	A					kg
250	150	3	–	–	**CR1F150●●**	3.500
		4	–	–	**CR1F1504●●**	3.800
275	185	3	–	–	**CR1F185●●**	4.600
		4	–	–	**CR1F1854●●**	5.400
350	265	3	–	–	**CR1F265●●**	7.400
		4	–	–	**CR1F2654●●**	8.500
500	400	3	–	–	**CR1F400●●**	9.100
		4	–	–	**CR1F4004●●**	10.200
700	500	3	–	–	**CR1F500●●**	11.300
		4	–	–	**CR1F5004●●**	12.900
1000	630	3	–	–	**CR1F630●●**	18.600
		4	–	–	**CR1F6304●●**	21.500

Note: *accessories, replacement parts and spare coils, see pages B10/19 to B10/21.*

(1) Standard control circuit voltages: see page B10/20. ***Please check the availability of your variant in the index page B10/24. The SEARCH function of your viewer can be used.***

High power contactors

Characteristics:
pages B10/56 to B10/65

Dimensions:
pages B10/66 to B10/69

DB439378.eps

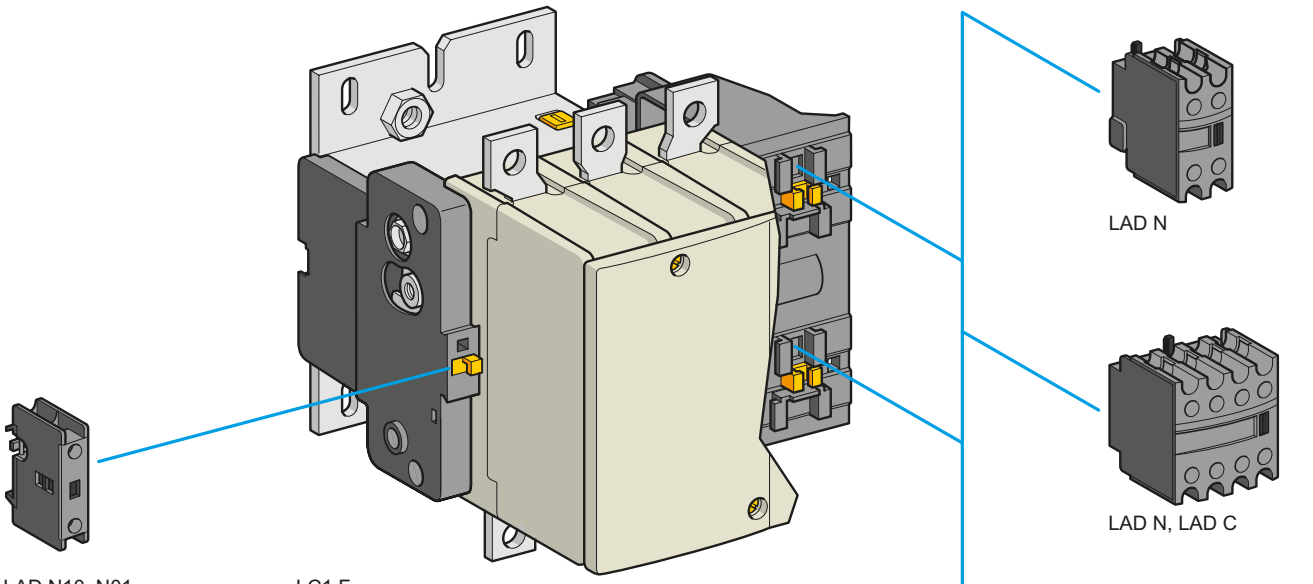

LAD N10, N01

LC1 F

LAD N

LAD N, LAD C

LAD T, LAD S

LAD R

LA1 DX, DY, DZ

LA4 EM250●●

Instantaneous auxiliary contact blocks

For use in normal operating environments

Number of contacts	Maximum number of blocks per contactor Clip-on mounting	Composition				Reference
1	1	–	–	1	–	**LADN10**
		–	–	–	1	**LADN01**
2	2	–	–	1	1	**LADN11**
		–	–	2	–	**LADN20**
		–	–	–	2	**LADN02**
4	2	–	–	2	2	**LADN22**
		–	–	1	3	**LADN13**
		–	–	4	–	**LADN40**
		–	–	–	4	**LADN04**
		–	–	3	1	**LADN31**
		–	–	2	2 (1)	**LADC22**

With terminal referencing conforming to EN 50012

2	2	–	–	1	1	**LADN11P**
		–	–	1	1	**LADN11G**
4	2	–	–	2	2	**LADN22P**
		–	–	2	2	**LADN22G**

Instantaneous auxiliary contact blocks for connection by lugs

This type of connection is not possible for blocks with 1 contact or blocks with dust and damp protected contacts. For all other instantaneous auxiliary contact blocks, add the figure **6** to the end of the references selected above. Example: **LADN11** becomes **LADN116**.

Instantaneous auxiliary contact blocks with dust and damp protected contacts

Recommended for use in particularly harsh industrial environments

Number of contacts	Maximum number of blocks per contactor Clip-on mounting	Composition				Reference
2	2	2	–	–	–	**LA1DX20**
		2	2 (2)	–	–	**LA1DY20**
4	2	2	–	2	–	**LA1DZ40**
		2	–	1	1	**LA1DZ31**

Time delay auxiliary contact blocks

Number of contacts	Maximum number of blocks per contactor Clip-on mounting	Time delay Type	Range s	Reference
1 N/O + 1 N/C	2	On-delay	0.3 (3)	**LADT0**
			1…30	**LADT2**
			10…180	**LADT4**
			1…30 (4)	**LADS2**
		Off-delay	0.3 (3)	**LADR0**
			1…30	**LADR2**
			10…180	**LADR4**

(1) Including 1 N/O + 1 N/C make before break.
(2) Device fitted with 4 earth screen continuity terminals.
(3) With extended scale from 0.1 to 0.6 s.
(4) With switching time of 40 ms ±15 ms between opening of the N/C contact and closing of the N/O contact.

Introduction: page B10/6
Schemes: page B10/37

Product references

PB111612.eps



LA9D09981

PB111603.eps



LA4F●●●

Suppressor blocks (1)

RC circuits (resistor-capacitor)

■ Effective protection for circuits highly sensitive to "high frequency" interference. For use only in cases where the voltage is virtually sinusoidal, i.e. less than 5 % total harmonic distortion.
■ Voltage limited to 3 Uc max. and oscillating frequency limited to 400 Hz max.
■ Slight increase in drop-out time (1.1 to 1.3 times the normal time).

Mounting	Uc		Reference
Clip-on mounting on all ratings and all a.c. coils.	∼	24…48 V	**LA4FRCE**
		50…110 V	**LA4FRCF**
		127…240 V	**LA4FRCP**
		265…415 V	**LA4FRCV**
Suppressor block bracket			**LA9D09981**

Varistors (peak limiting)

■ Protection provided by limiting the transient voltage to 2 Uc max.
■ Maximum reduction of transient voltage peaks.

Clip-on mounting on all ratings and all coils.	∼ or ⎓	24…48 V	**LA4FVE**
		50…110 V	**LA4FVF**
		127…240 V	**LA4FVP**
		265…415 V	**LA4FVV**

Diodes

■ No overvoltage or oscillating frequencies.
■ Increase in drop-out time (3 to 4 times the normal time).
■ Polarised component.

Clip-on mounting on all ratings and all d.c. coils.	⎓	24…48 V	**LA4FDE**
		55…110 V	**LA4FDF**
		280…440 V	**LA4FDV**

Bidirectional peak limiting diodes (transil)

■ Protection provided by limiting the transient voltage to between 2 and 2.5 times Uc max.
■ Maximum reduction of transient voltage peaks.

Clip-on mounting on all ratings and all coils.	∼ or ⎓	24…48 V	**LA4FTE**
		50…110 V	**LA4FTF**
		127…240 V	**LA4FTP**
		265…415 V	**LA4FTV**

*(1) Order 2 x **LA4F●●●** for **F780**, **F1000**, **F1400**, **F1700**, **F2100** & **F2600** contactors and connect one suppressor block accross each coil.*

High power contactors

Dimensions:
page B10/34

Life Is On Schneider Electric

Product references

PB107578.eps



LA9F2100 (set of 6)

PB114813.eps

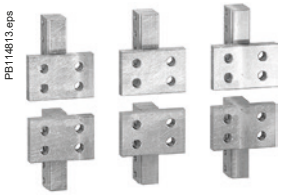

LA9F2600 (set of 6)

Right-angled connectors

For contactors or thermal overload relays

For use with	With connector plates		Set of 6 connectors	
Contactors			Set reference	Weight kg
	Width	Type		
LC1F1000, F1400, F1700, F2100	60 mm	Rear	**LA9F2100**	9.550
LC1F2600	100 mm	Rear	**LA9F2600**	4.380

Dimensions:
page B10/34

PB121430.eps



LA9F801

Phase separators

For use on 3-pole contactors	No. of barriers per set	Set reference
LC1F1400, F1700 F2100 and F2600	4	**LA9F801**

PB121429.eps



LA4EM250FK

Electronic Control Module (ECM) (1)

For use on 3 and 4-pole contactors	With coil reference	ECM reference
LC1SF1200	**LXEFK250**	**LA4EM250FK**
LC1F1250	**LXEFL250**	**LA4EM250FL**
LC1F2600	**LXEFL2502**	**LA4EM250FL2**

(1) ECM enables wider coil operating voltage for the F range of contactors.

Note: *Refer to page number B10/31 for detailed technical information.*

Sets of contacts

Per pole: 2 fixed contacts, 1 moving contact , 2 deflectors, 1 back-plate, clamping screws and washers.

For contactor	Type	Replacement for	Reference	Weight kg
3-pole	LC1F780	1 pole	**LA5F780801** (1)	4.700
		3 poles	**LA5F780803**	13.200
4-pole	LC1F7804	1 pole	**LA5F780801** (1)	4.700
		4 poles	**LA5F780804**	17.300

(1) Comprising 2 identical items per pole.



Control Panel Technical Guide:
Description and product reference of all mounting kits and wiring accessories for D, K, F - Star Delta, reverser, low-high speed control motor starters and changeover applications.

> Ref. Document: CPTG011_EN

> Click on QR code to download

PB121426.eps



LXEFK250

Coils for a.c./ d.c. wide band control voltage

Operates on AC or DC voltage inputs.
Low sealed consumption.
High tolerance to inrush voltage drops.

Control circuit voltage Uc	Average resistance at 20 °C ±10 %		Voltage code	Reference
	Inrush	Sealed		
V	Ω	Ω		
For contactor LC1SF1200				
100...250	8	8	KUE	**LXEFK250**

Specifications
Average consumption at 20 °C; 50 Hz/ 60 Hz; cos ϕ = 0.5-0.6:
- inrush: 550 VA max
- sealed: 8 VA max.

Heat dissipation: 5.5 W max.
Operating time at Uc: closing = 40...80 ms, opening = 6…54 ms.
Operating cycles/hour (θ ⩽ 55 °C): 1200.
Embedded PLC input according IEC 61131-2 type 2:
- Off state: 0...5 V DC
- On state: 11...30 V DC.

Control circuit voltage Uc	Average resistance at 20 °C ±10 %		Voltage code	Reference
	Inrush	Sealed		
V	Ω	Ω		
For contactor LC1F1250				
100...250	4.78	4.78	KUE	**LXEFL250**

Specifications
Average consumption at 20 °C; 50 Hz/ 60 Hz; cos ϕ = 0.5-0.6:
- inrush: 680 VA max
- sealed: 10 VA max.

Heat dissipation: 5.5 W max.
Operating time at Uc: closing = 40...80 ms, opening = 6...54 ms.
Operating cycles/hour (θ ⩽ 55 °C): 1200.
Embedded PLC input according IEC 61131-2 type 2:
- Off state: 0...5 V DC
- On state: 11...30 V DC.

Control circuit voltage Uc	Average resistance at 20 °C ±10 %		Voltage code	Reference
	Inrush	Sealed		
V	Ω	Ω		
For contactor LC1F2600				
100...250	2.27	2.27	KUE	**LXEFL2502**

Specifications
Average consumption at 20 °C; 50 Hz/ 60 Hz; cos ϕ = 0.5-0.6:
- inrush: 2400 VA max
- sealed: 24.5 VA max.

Heat dissipation: 5.5 W max.
Operating time at Uc: closing = 54...88 ms, opening = 20...28 ms.
Operating cycles/hour (θ ⩽ 55 °C): 600.
Embedded PLC input according IEC 61131-2 type 2:
- Off state: 0...5 V DC
- On state: 11...30 V DC.



LX1FK●●●



LX1FL●●●

Coils for a.c., 40...400 Hz control voltage

Low sealed consumption.
Operate on networks with harmonic numbers ⩽ 7.

Control circuit voltage Uc	Average resistance at 20 °C ±10 %		Inductance of closed circuit	Voltage code	Reference	Weight
	Inrush	Sealed				
V	Ω	Ω	H			kg
For contactor LC1SF1200						
220	35.5	915	4.55	M7	**LX1FK220**	1.150
230	35.5	915	4.55	P7	**LX1FK220**	1.150

Specifications
Average consumption at 20 °C for 50 or 60 Hz, cos φ = 0.9:
■ inrush: 1050…1150 VA,
■ sealed: 16…20 VA.
Operating cycles/hour (θ ⩽ 55 °C): ⩽ 2400.
Heat dissipation: 18 W.
Operating time at Uc: closing = 40…75 ms, opening = 100…170 ms.

For contactor LC1F1250						
110/120	6.45	165	1.85	F7	**LX1FL110**	1.500
115	6.45	165	1.85	FE7	**LX1FL110**	1.500
200/208	20.5	605	2.65	L7	**LX1FL200**	1.500
220	25.5	730	3.35	M7	**LX1FL220**	1.500
230	25.5	730	3.35	P7	**LX1FL220**	1.500
240	25.5	730	3.35	U7	**LX1FL220**	1.500
265/277	31	900	4.1	W7	**LX1FL260**	1.500
380	78	2360	10.5	Q7	**LX1FL380**	1.500
400	78	2360	10.5	V7	**LX1FL380**	1.500
415	96	2960	13	N7	**LX1FL415**	1.500
440	96	2960	13	R7	**LX1FL415**	1.500

Specifications
Average consumption at 20 °C for 50 or 60 Hz, cos φ = 0.9:
■ inrush: 1500…1730 VA,
■ sealed: 20…25 VA.
Operating cycles/hour (θ ⩽ 55 °C): 1200.
Heat dissipation: 20 W.
Operating time at Uc: closing = 40…80 ms, opening = 100…200 ms.

PB112321.eps



LX1FX●●●

Coils for a.c., 40...400 Hz control voltage

Low sealed consumption.
Operate on networks with harmonic numbers ⩽ 7.

Control circuit voltage Uc	Average resistance at 20 °C ±10 %		Inductance of closed circuit	Voltage code	Reference	Weight
	Inrush	Sealed				
V	Ω	Ω	H			kg
For contactor LC1F780						
110/120	4.95 (2)	230 (2)	0.21	F7	**LX1FX110** (1)	3.000
115	4.95 (2)	230 (2)	0.21	FE7	**LX1FX110** (1)	3.000
220	19.5 (2)	920 (2)	0.82	M7	**LX1FX220** (1)	3.000
230	19.5 (2)	920 (2)	0.82	P7	**LX1FX220** (1)	3.000
240	19.5 (2)	920 (2)	0.82	U7	**LX1FX220** (1)	3.000
265/277	29.8 (2)	1330 (2)	1.25	W7	**LX1FX280** (1)	3.000
415/480	74.3 (2)	3340 (2)	2.8	N7	**LX1FX415** (1)	3.000
440	74.3 (2)	3340 (2)	2.8	R7	**LX1FX415** (1)	3.000

Specifications
Average consumption at 20 °C for 50 or 60 Hz, cos φ = 0.9:
■ inrush: 1900…2300 VA, sealed: 44…55 VA.
Operating cycles/hour (θ ⩽ 55 °C): 600.
Heat dissipation: 2 x 22 W.
Operating time at Uc: closing = 40…80 ms, opening = 130…230 ms.

PB121422.eps



LX1FK●●●

Control circuit voltage Uc	Average resistance at 20 °C ±10 %		Inductance of closed circuit	Voltage code	Reference	Weight
	Inrush	Sealed				
V	Ω	Ω	H			kg
For contactor LC1F1000						
110	4.718	98.4	0.63	F7	**LX1FK055** (3)	1.150
For contactors LC1F1400, LC1F1700 and LC1F2100						
120	5.92	106	0.72	G7	**LX1FK070** (3)	1.150
For contactors LC1F1000, LC1F1400, LC1F1700 and LC1F2100						
220	9.55	260	1.25	M7	**LX1FK110** (3)	1.150
230	9.55	260	1.25	P7	**LX1FK110** (3)	1.150
277	16.5	420	2.25	W7	**LX1FK140** (3)	1.150
415	35.5	915	4.55	N7	**LX1FK220** (3)	1.150
440	35.5	915	4.55	R7	**LX1FK220** (3)	1.150
500	44.5	1160	5.75	S7	**LX1FK240** (3)	1.150

Specifications
Average consumption at 20 °C for 50 or 60 Hz, cos φ = 0.9:
■ inrush: 1600…2400 VA, sealed: 29…37 VA.
Operating cycles/hour (θ ⩽ 55 °C): 600.
Heat dissipation: 2 x 18 W.
Operating time at Uc: closing = 40…75 ms, opening = 100…170 ms.

PB121421.eps



LX1FL●●●

Control circuit voltage Uc	Average resistance at 20 °C ±10 %		Inductance of closed circuit	Voltage code	Reference	Weight
	Inrush	Sealed				
V	Ω	Ω	H			kg
For contactors LC1F2600						
110	2.05	41	0.18	F7	**LX1FL065** (3)	1.150
120	2.05	41	0.18	G7	**LX1FL065** (3)	1.150
220	6.45	165	0.76	M7	**LX1FL110** (3)	1.150
230	6.45	165	0.76	P7	**LX1FL110** (3)	1.150
277	10.2	317	1.45	W7	**LX1FL140** (3)	1.150
380	20.5	605	2.65	Q7	**LX1FL200** (3)	1.150
400	20.5	605	2.65	V7	**LX1FL200** (3)	1.150
415	25.5	730	3.35	N7	**LX1FL220** (3)	1.150
440	25.5	730	3.35	R7	**LX1FL220** (3)	1.150
500	30.8	901	4.13	S7	**LX1FL260** (3)	1.150

Specifications
Average consumption at 20 °C for 50 or 60 Hz, cos φ = 0.9:
■ inrush: 2200…2700 VA, sealed: 37.4…50.6 VA.
Operating cycles/hour (θ ⩽ 55 °C): 600.
Heat dissipation: 2 x 25 W.
Operating time at Uc: closing = 40…80 ms, opening = 100…200 ms.

(1) Reference of set of 2 identical coils, to be connected in series.
(2) Value for the 2 coils in series.
(3) Order 2 coils and connect them in series.

PB112328_40.eps



LX4FK●●●

LX4FK specifications
Average consumption:
- inrush: 990…1220 W,
- sealed: 4.54…8 W.

Operating cycles/hour (θ ≤ 55 °C): 2400.
Operating time at Uc: closing = 50…60 ms, opening = 45…60 ms.

LXE specifications
Average consumption:
- inrush 50/60 Hz: 280...730 VA rms
  DC: 270...680 W,
- sealed: 50/60 Hz: 4.5...10 VA rms
  DC: 2.5..5.5 W.

Heat Dissipation: 2.5..5.5 W
Operating cycles/hour (θ ≤ 55 °C): < 2400.
Operating time at Uc: closing = 40…80 ms, opening = 6…54 ms.
Embedded PLC input according IEC 61131-2 type 2:
- Off state: 0...5 V DC
- On state: 11...30 V DC.

LX4FL specifications
Average consumption:
- inrush: 1420…1920 W,
- sealed: 6.5…12.5 W.

Operating cycles/hour (θ ≤ 55 °C): 1200.
Operating time at Uc: closing = 60…70 ms, opening = 40…50 ms.

LX4FX specifications
Average consumption:
- inrush: 1960…2420 W
- sealed: 42…52 W.

Operating cycles/hour (θ ≤ 55 °C): 600.
Operating time at Uc: closing = 70…80 ms, opening = 100…130 ms.

LX4FK specifications with LC1F1000,1400,1700, 2100
Average consumption:
- inrush: 2000…2200 W,
- sealed: 8…10 W.

Operating cycles/hour (θ ≤ 55 °C): 600.
Operating time at Uc: closing = 50…60 ms, opening = 45…60 ms.

LX4FL specifications with LC1F2600
Average consumption:
- inrush: 2130…2880 W
- sealed: 13…25 W.

Operating cycles/hour (θ ≤ 55 °C): 600.
Operating time at Uc: closing = 60…70 ms, opening = 40…50 ms.

Coils for d.c. control voltage

Low sealed consumption.

Control circuit voltage Uc	Average resistance at 20 °C ±10 % Inrush	Sealed	Inductance of closed circuit	Voltage code	Reference	Weight
V	Ω	Ω	H			kg
For contactor LC1SF1200						
110	11.5	2450	280	FD	**LX4FK110**	1.080
220	44	8150	1080	MD	**LX4FK220**	1.080
For contactor LC1F1250 (1)						
For contactors LC1F115 and LC1F150						
100...380 ⎓						
For contactor LC1SF1200						
100...250 ∿ 110 and 220 ⎓	8	–	–	KUE	**LXEFK250**	1.100
For contactor LC1F1250						
100...250 ∿ 100...380 ⎓	4.78	–	–	KUE	**LXEFL250**	1.100
For contactor LC1F1250						
110	8.1	1680	180	FD	**LX4FL110**	1.450
220	31	5160	650	MD	**LX4FL220**	1.450
For contactor LC1F780						
110	6.1 (3)	280 (3)	0.26	FD	**LX4FX110** (2)	3.000
125	7.7 (3)	410 (3)	0.33	GD	**LX4FX125** (2)	3.000
250	29.8 (3)	1330 (3)	1.25	UD	**LX4FX250** (2)	3.000
440	92 (3)	4180 (3)	3.5	RD	**LX4FX440** (2)	3.000
For contactors LC1F1000, LC1F1400, LC1F1700 and LC1F2100						
125	3.73	916	122	GD	**LX4FK065** (4)	1.080
220	11.5	2450	280	MD	**LX4FK110** (4)	1.080
440	44	8150	1080	RD	**LX4FK220** (4)	1.080
For contactor LC1F2600						
110	2.05	481	64	FD	**LX4FL055** (4)	1.080
125	2.53	603	80	GD	**LX4FL065** (4)	1.080
220	11.5	2450	280	MD	**LX4FL110** (4)	1.080
250	15	2930	400	UD	**LX4FL125** (4)	1.080
440	44	8150	1080	RD	**LX4FL220** (4)	1.080

*(1) LXE coil to be used along with suitable Electronic Control Module (ECM) Ref. **LA4EM●●●●●**. For details, please refer to page B10/10.*
(2) Reference of set of 2 identical coils, to be connected in series.
(3) Value for the 2 coils in series.
(4) Order 2 coils and connect them in series.

PB121689.eps



LADN●●

PB123803.eps



LADT●

Auxiliary contact blocks for LC1FG 3-pole shockproof contactors

Instantaneous auxiliary contact blocks

For use in normal operating environments

Number of contacts	Max. number of blocks per contactor Clip-on mounting	Composition				Reference	
		–	–	1	–	**LADN10**	(1)
		–	–	–	1	**LADN01**	(1)
4	1	–	–	2	2	**LADN22**	(1)
		–	–	4	–	**LADN40**	(1)
		–	–	–	4	**LADN04**	(1)
		–	–	3	1	**LADN31**	(1)

Time delay auxiliary contact blocks

Number of contacts	Max. number of blocks per contactor Clip-on mounting	Time delay Type	Range	Reference	
			s		
1 N/O + 1 N/C	1	On-delay	0…3 (2)	**LADT0**	
			1…30	**LADT2**	(1)
			10…180	**LADT4**	
			1…30 (3)	**LADS2**	
		Off-delay	0…3 (2)	**LADR0**	
			1…30	**LADR2**	(1)
			10…180	**LADR4**	

(1) Device approved by the DCN (French naval shipyard department) and authorised for on-board use.
(2) With extended scale from 0.1 to 0.6 s.
(3) With switching time of 40 ms ±15 ms between opening of the N/C contact and closing of the N/O contact.

Characteristics:
pages B10/52 and B10/53

Schemes:
page B10/55

Product references

PB121695.eps

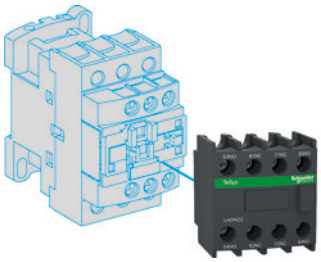

LADN

PB111617.eps



LA9F103

PB111592.eps



LA9F70●

Accessories for contactors CR1F

Description	Number of contacts or shrouds	For use on	Reference
Instantaneous auxiliary contacts	(1)	CR1F	**LADN●●, LADX●●, LADY●●, LADZ●●** (1)
Time delay auxiliary contacts	(1)	CR1F	**LADT●, LADS●, LADR●** (1)
Contact blocks with protected terminals for 3-pole contactors (for mounting on contactors with closed arc chamber)	Set of 2 blocks	CR1F150 and CR1F185	**LA9F103**
Power terminal protection shrouds	Set of 6 shrouds for 3-pole contactors	CR1F150 and CR1F185	**LA9F702**
		CR1F265 to CR1F500	**LA9F703**
		CR1F630	**LA9F704**
	Set of 8 shrouds for 4-pole contactors	CR1F1504 and CR1F1854	**LA9F707**
		CR1F2654 to CR1F5004	**LA9F708**
		CR1F6304	**LA9F709**

Description	Application	Reference
Mechanical interlock and power connections	For assembly of reversing contactors and changeover contactor pairs	See pages B10/17 and B10/18

(1) For maximum number per contactor and complete reference, see page B10/7.



Control Panel Technical Guide:
Description and product reference of all mounting kits and wiring accessories for D, K, F - Star Delta, reverser, low-high speed control motor starters and changeover applications.

> Ref. Document: CPTG011_EN

> Click on QR code to download

Dimensions:
pages B10/66 to B10/69

Reversing and changeover assemblies with CR1F magnetic latching contactors

Horizontally mounted

Mechanical interlocks

Reversers assembled using 2 contactors of identical rating, type:
CR1F150
CR1F185
CR1F265
CR1F400
CR1F500
CR1F630

LA9F●970

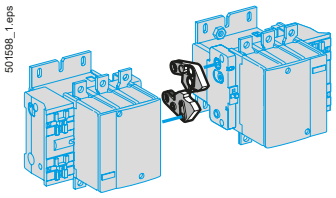

Sets of power connections

Reversing contactors
LA9F●976

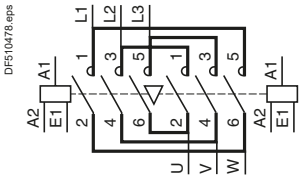



3 or 4-pole changeover contactor pairs
LA9F●977 or LA9F●982

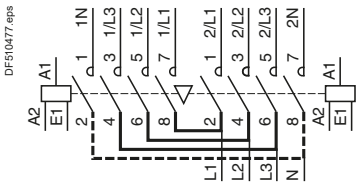



Vertically mounted

Mechanical interlocks

Reversers assembled using 2 contactors of identical rating, type:
CR1F150
CR1F185
CR1F265
CR1F400
CR1F500
CR1F630

LA9FF4F
LA9FG4G
Assembly A

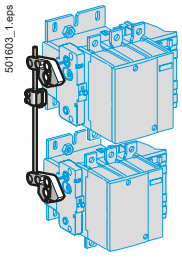

LA9FH4H
LA9FJ4J
LA9FL4L
Assembly C

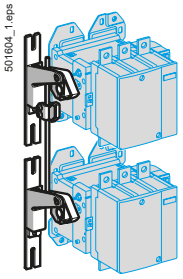

Reversers assembled using 2 contactors of different ratings, type:
CR1F150
CR1F185
CR1F265
CR1F400
CR1F500
CR1F630

LA9FH4F
LA9FJ4F
LA9FH4G
LA9FJ4G
LA9FL4G
Assembly B

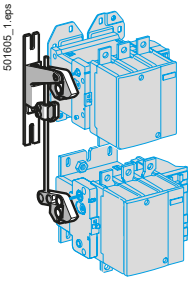

LA9FJ4H
LA9FK4H
LA9FL4H
LA9FK4J
LA9FL4J
Assembly C

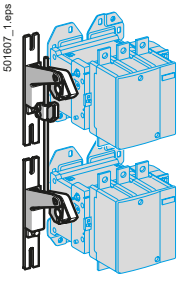

Reversers assembled using 3 contactors of identical or different ratings

LA9F●4●4●

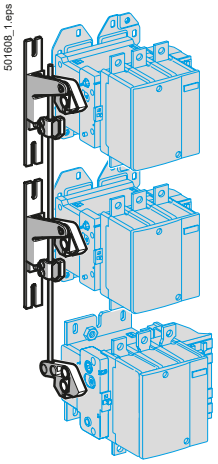

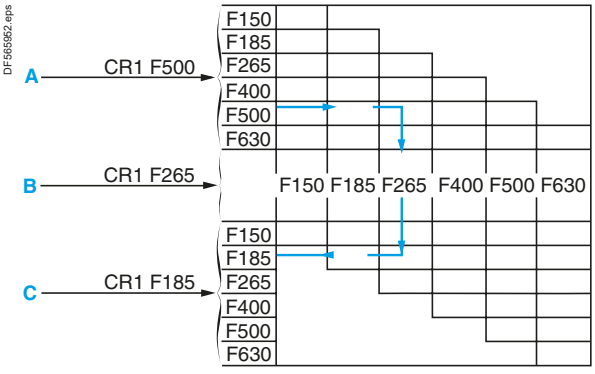

Warning: the contactor ratings must be in decreasing size from top to bottom.

Product references

Reversing and changeover assemblies with CR1F magnetic latching contactors.

Reversers assembled using 2 contactors of identical rating

Contactor type	Set of power connections		Mechanical interlock	
	3-pole Reference	Weight kg	Kit reference	Weight kg
For assembly of 3-pole reversing contactors for motor control (1)				
Horizontally mounted				
CR1F150	**LA9FF976**	0.600	**LA9FF970**	0.060
CR1F185	**LA9FG976**	0.780	**LA9FG970**	0.060
CR1F265	**LA9FH976**	1.500	**LA9FJ970**	0.140
CR1F400	**LA9FJ976**	2.100	**LA9FJ970**	0.140
CR1F500	**LA9FK976**	2.350	**LA9FJ970**	0.140
CR1F630	**LA9FL976**	3.800	**LA9FL970**	0.150
Vertically mounted				
CR1F150	(2)	–	**LA9FF4F**	0.345
CR1F185	(2)	–	**LA9FG4G**	0.350
CR1F265	(2)	–	**LA9FH4H**	1.060
CR1F400	(2)	–	**LA9FJ4J**	1.200
CR1F630	(2)	–	**LA9FL4L**	1.220
For assembly of 4-pole changeover contactor pairs				
Horizontally mounted				
CR1F2654	**LA9FH982**	1.200	**LA9FJ970**	0.140
CR1F4004	**LA9FJ982**	1.800	**LA9FJ970**	0.140
CR1F5004	**LA9FK982**	2.300	**LA9FJ970**	0.140
Vertically mounted				
CR1F1504	(2)	–	**LA9FF4F**	0.345
CR1F1854	(2)	–	**LA9FG4G**	0.350
CR1F2654	(2)	–	**LA9FH4H**	1.060
CR1F4004	(2)	–	**LA9FJ4J**	1.200
CR1F6304	(2)	–	**LA9FL4L**	1.220

Reversers assembled using 2 contactors of different ratings

Contactor type		Mechanical interlock	
At bottom	At top	Kit reference	Weight kg
For assembly of 3 or 4-pole changeover contactor pairs			
Vertically mounted (3)			
CR1F150 or F1504	CR1F265 or F2654	**LA9FH4F**	0.870
	CR1F400 or F4004	**LA9FJ4F**	0.930
CR1F185 or F1854	CR1F265 or F2654	**LA9FH4G**	0.860
	CR1F400 or F4004	**LA9FJ4G**	0.940
	CR1F630 or F6304	**LA9FL4G**	0.950
CR1F265 or F2654	CR1F400 or F4004	**LA9FJ4H**	1.130
	CR1F500 or F5004	**LA9FK4H**	1.130
	CR1F630 or F6304	**LA9FL4H**	1.140
CR1F400 or F4004	CR1F500 or F5004	**LA9FK4J**	1.200
	CR1F630 or F6304	**LA9FL4J**	1.210

For assembly of 3 or 4-pole reversing contactors (4)

Using 3 contactors (vertically mounted) of identical or different ratings	Mechanical interlock Kit reference (5)
The contactor ratings must be in decreasing size from top to bottom.	**LA9F●4●4●**

Contactors	CR1F150	CR1F185	CR1F265	CR1F400	CR1F500	CR1F630
Code	F	G	H	J	K	L

Example: mechanical interlock for reversing contactor made up of 3 different contactors: CR1F500 top, CR1F265 middle and CR1F185 bottom: **LA9FK4H4G**.

(1) A 3-pole reversing contactor for motor control can be converted into a 3-pole changeover contactor pair by removing the upper connecting links.
(2) All power connections are to be made by the customer.
(3) With identical or different number of poles. Power connections to be made by the customer.
(4) Closing of one of the 3 contactors prevents closing of the other 2 contactors.
(5) Complete the reference by replacing the first dot with the code for the upper contactor, the second dot with the code for the middle contactor and the third dot with the code for the bottom contactor.

Illustrations: page B10/17
Dimensions: pages B10/66 to B10/69

Product references

PB121414.eps



LA5FG431

References

Description	For contactor		Reference	Weight kg
Complete sets of contacts for 3 or 4 poles (1)	3-pole	CR1F150	**LA5FF431**	0.270
		CR1F185	**LA5FG431**	0.350
		CR1F265	**LA5FH431**	0.660
		CR1F400	**LA5F400803**	0.660
		CR1F500	**LA5F500803**	0.660
		CR1F630	**LA5F630803**	0.660
	4-pole	CR1F1504	**LA5FF441**	0.360
		CR1F1854	**LA5FG441**	0.465
		CR1F2654	**LA5FH441**	0.880
		CR1F4004	**LA5F400804**	0.465
		CR1F5004	**LA5F500804**	0.465
		CR1F6304	**LA5F630804**	0.465

(1) Set containing the following (per pole): 2 fixed contacts, 1 moving contact , 2 deflectors, 1 back-plate, clamping screws and washers.

Product references

PB121413.eps



LXF0FH007

PB121412.eps



LX0FK007

Standard coils for a.c. or d.c. control voltage						
Usual voltages		Resistance of winding at θ = 20 °C		Reference	Voltage code	Weight
50…400 Hz or ⎓	50 Hz, 60 Hz	Latching	Unlatching			
V	V	Ω	Ω			kg
For contactors CR1F150						
48	–	1.98	230.8	**LX0FF005**	E7	0.440
127	–	11.61	1788	**LX0FF007**	G7	0.440
–	415	139.50	16 717	**LX0FF011**	N7	0.440
For contactors CR1F185						
48	–	1.42	220	**LX0FG005**	E7	0.560
208	–	21.30	3169	**LX0FG020**	L7	0.560
–	415	102.30	14 305	**LX0FG011**	N7	0.560
For contactors CR1F265						
48	–	1.34	183.4	**LX0FH005**	E7	0.780
127	–	8.56	1325	**LX0FH007**	G7	0.780
208	–	20.20	2654	**LX0FH020**	L7	0.780
–	380/400	78.39	11 803	**LX0FH010**	Q7	0.780
–	415	102.9	15 006	**LX0FH011**	N7	0.780
For contactors CR1F400						
208	–	24.40	2643	**LX0FJ020**	L7	1.120
–	380/400	94.80	9380	**LX0FJ010**	Q7	1.120
–	415	121.10	11 763	**LX0FJ011**	N7	1.120
For contactors CR1F500						
48	–	1.57	166	**LX0FK005**	E7	1.220
127	–	9.56	1159	**LX0FK007**	G7	1.220
208	–	23.60	2981	**LX0FK020**	L7	1.220
–	415	112.06	13 256	**LX0FK011**	N7	1.220
For contactors CR1F630						
48	–	0.87	204	**LX0FL005**	E7	1.460
127	–	6.45	1830	**LX0FL007**	G7	1.460
208	–	20.20	2961	**LX0FL020**	L7	1.460
–	415	77.97	13 003	**LX0FL011**	N7	1.460

Product references

PB121483.eps



LX0FG●●●

Special coils for a.c. or d.c. control voltage

Coils with two windings with common point, allowing the use of two separate power sources for latching and unlatching.

Coil voltages at 50 Hz, 60 Hz, 400 Hz or ⎓		Resistance of winding at θ = 20 °C		Reference	Voltage code	Weight
Latching	Unlatching	Latching	Unlatching			
V	V	Ω	Ω			kg
For contactors CR1F150						
220	24	29.5	39.5	**LX0FF224**	MB7	0.440
For contactors CR1F185						
220	24	26.5	19	**LX0FG224**	MB7	0.560
For contactors CR1F265						
220	24	26	29.5	**LX0FH224**	MB7	0.780
For contactors CR1F400						
220	24	30	23	**LX0FJ224**	MB7	1.120
For contactors CR1F500						
220	24	29	26	**LX0FK224**	MB7	1.220
For contactors CR1F630						
220	24	26	41	**LX0FL224**	MB7	1.460

Coils with low inrush consumption for d.c. control voltage

Usual voltages ⎓	Resistance of winding at θ = 20 °C		Reference	Voltage code	Weight
	Latching	Unlatching			
V	Ω	Ω			kg
For contactors CR1F150					
48	4.56	140.56	**LX0FF055**	EZ7	0.440
220	89.85	3342.51	**LX0FF058**	MZ7	0.440
For contactors CR1F185					
48	5.19	106.54	**LX0FG055**	EZ7	0.570
127	32.75	732.64	**LX0FG057**	GZ7	0.570
For contactors CR1F265					
110	25	364.61	**LX0FH056**	FZ7	0.800
220	97.89	1344.46	**LX0FH058**	MZ7	0.800
For contactors CR1F400					
127	31.86	221.20	**LX0FJ057**	GZ7	1.150
220	98.19	648.79	**LX0FJ058**	MZ7	1.150
For contactors CR1F630					
48	3.94	59.17	**LX0FL055**	EZ7	1.500
110	19.36	365.33	**LX0FL056**	FZ7	1.500

Product references

PB121411.eps



LC1V320

Vacuum contactors - Motors 160 to 610 A / 400 V - a.c. coils

Standard power ratings 50/60 Hz in category AC-3					Rated operational current Ie		Instantaneous auxiliary contacts		Control circuit voltage (50/60 Hz)	Basic reference (1)	Weight
230 V	400 V	525 V	690 V	1000 V	AC-3 400 V up to	AC-1					
kW	kW	kW	kW	kW	A	A					kg
45	75	110	150	200	160	160	2	1	(1)	**LC1V160●●**	3.800
90	160	220	280	400	320	320	1	1	(1)	**LC1V320●●**	10.500
160	300	400	560	800	610	630	1	1	(1)	**LC1V610●●**	13.000

Reversing vacuum contactors

The reversing contactor range comprises :

- for 160 A rating, a kit with set of power connections allowing assembly of the starter
- for 320 and 610 A ratings, a complete starter, ready for use.

(1) Basic reference; add code indicating control circuit voltage.
Standard control circuit voltages:

Volts 50/60 Hz	110…120	220…240	380…415	440…480	550…600
Item	FE7	P7	V7	R7	X7

Please check the availability of your variant in the index page B10/24. The SEARCH function of your viewer can be used.

Product references

PB121408.eps



LA1VN11

Instantaneous auxiliary contact blocks (1)

Number of contacts	Maximum number of blocks per contactor	Auxiliary contacts		Reference
		⊣	⊢	
2	4	1	1	**LA1VN11**
		2	–	**LA1VN20**
		1	1	**LA1VN11X** (2)

PB121409.eps



LX1V320●●

50/60 Hz coils

Rated voltage	Voltage code	Reference
V		
For contactors LC1V160		
380…415	V7	**LX1V160V7**
440…480	R7	**LX1V160R7**
550…600	X7	**LX1V160X7**
For contactors LC1V320		
440…480	R7	**LX1V320R7**
For contactors LC1V610		
220…240	P7	**LX1V610P7**
380…415	V7	**LX1V610V7**
440…480	R7	**LX1V610R7**

*(1) **LC1V160**: auxiliary contact blocks mounted at the top of the contactor, with no change to the overall dimensions.*
***LC1V320** or **LC1V610**: 2 auxiliary contact blocks mounted on the RH and LH side of the contactor, with no change to the overall dimensions.*
*(2) For **LC1V160**: 1 N/C contact for the coil + 1 N/O contact.*

Product references

CR1F150F7	LA4EM250FL	LA9F705	LA9FL4J	LC1FG500N7
CR1F150M7	LA4FDE	LA9F706	LA9FL4L	LC1SF1200KUE
CR1F150U7	LA4FDF	LA9F707	LA9FL970	LC1SF1200M7
CR1F185F7	LA4FRCE	LA9F708	LA9FL976	LC1SF1200P7
CR1F185G7	LA4FRCF	LA9F709	LA9FL980	LC1V160FE7
CR1F185M7	LA4FRCP	LA9F801	LA9FX990M	LC1V160P7
CR1F185Q7	LA4FRCV	LA9F980	LA9FX991F	LC1V160P7SC
CR1F185U7	LA4FTE	LA9FF4F	LA9FX991Q	LC1V320FE7
CR1F2654F7	LA4FTF	LA9FF601	LC1D115004L6	LC1V320P7
CR1F265F7	LA4FTP	LA9FF970	LC1F1250	LC1V610FE7
CR1F265G7	LA4FVE	LA9FF976	LC1F1250F7	LC1V610P7
CR1F265GD31S003	LA4FVF	LA9FF981	LC1F1250KUE	LX1D8FE7
CR1F265M7	LA4FVP	LA9FG4F4F	LC1F1250M7	LX1D8L7
CR1F265U7	LA4FVV	LA9FG4G	LC1F1250MD	LX1D8N7
CR1F4004MZ7	LA5D11550	LA9FG601	LC1F1250P7	LX1D8R7
CR1F400F7	LA5F400802	LA9FG610	LC1F1250Y	LX1D8V7
CR1F400FZ7	LA5F400803	LA9FG970	LC1F1400	LX1FK220
CR1F400M7	LA5F400804	LA9FG976	LC1F1400MD	LX1FL110
CR1F400Q7	LA5F500803	LA9FG979	LC1F1400P7	LX1FL200
CR1F500F7	LA5F500804	LA9FG980	LC1F1700	LX1FL220
CR1F500GD31S003	LA5F630803	LA9FH4F	LC1F1700F7	LX1FL2206
CR1F500M7	LA5F630804	LA9FH4G	LC1F1700M7	LX1FL260
CR1F500Q7	LA5F780801	LA9FH4H	LC1F1700MD	LX1FL380
CR1F630F7	LA5F780803	LA9FH4H4F	LC1F1700P7	LX1FL415
CR1F630M7	LA5F780804	LA9FH4H4H	LC1F2100	LX1FX110
CR1F630MZ7	LA5F800803	LA9FH601	LC1F2100F7	LX1FX220
DR5TE4S	LA5FF431	LA9FH602	LC1F2100LD	LX1FX415
DR5TE4U	LA5FF441	LA9FH610	LC1F2100LDBR	LX1V610P7
DR5TF4V	LA5FG431	LA9FH976	LC1F2100M7	LX4D8MD
DZ2FF1	LA5FG441	LA9FH982	LC1F2100MD	LX4FK110
DZ2FF6	LA5FH431	LA9FJ4G	LC1F2100P7	LX4FK220
DZ2FG1	LA5FH441	LA9FJ4H	LC1F2100V7	LX4FL110
DZ2FG6	LA5FJ431	LA9FJ4J	LC1F2600	LX4FL125
DZ2FJ1	LA5FK431	LA9FJ4J4J	LC1F2600MD	LX4FL220
DZ2FJ6	LA5FL431	LA9FJ610	LC1F2600P7	LX4FX110
DZ2FK1	LA9D11517	LA9FJ970	LC1F780	LXEFF250
DZ2FK6	LA9D115604	LA9FJ974	LC1F7804	LXEFG250
DZ2FL1	LA9D115692	LA9FJ976	LC1F7804F7	LXEFH250
DZ2FL2	LA9D11570	LA9FJ980	LC1F7804M7	LXEFJ250
DZ2FL3	LA9D115704	LA9FJ982	LC1F7804MD	LXEFK250
DZ2FL6	LA9D730	LA9FK4H	LC1F7804P7	LXEFL250
DZ2FR1	LA9F103	LA9FK4J	LC1F780F7	
DZ2FX1	LA9F2100	LA9FK4K	LC1F780FE7	
DZ2FX6	LA9F2600	LA9FK4K4K	LC1F780G7	
LA1VN11	LA9F701	LA9FK976	LC1F780M7	
LA1VN11X	LA9F702	LA9FK982	LC1F780P7	
LA1VN20	LA9F703	LA9FL4G	LC1F780Q7	
LA4EM250FK	LA9F704	LA9FL4H	LC1FG265R7	

This document is current. Click on the product reference to get the most recent availability status (hyperlink to **se.com** product datasheet). If your product variant is no longer available, please consult your distributor or regional sales office.

F High power contactors

Technical Data for Designers

Contents

F contactors:
- > characteristics ..... B10/26 to B10/31
- > dimensions ..... B10/32 to B10/35
- > schemes ..... B10/36 and B10/37

FG shockproof contactors:
- > characteristics ..... B10/38 to B10/53
- > dimensions and schemes ..... B10/54 and B10/55

CR1F magnetic latching contactors:
- > characteristics ..... B10/56 to B10/65
- > dimensions ..... B10/66 to B10/69

V vacuum contactors:
- > characteristics ..... B10/70 and B10/71
- > dimensions ..... B10/72 and B10/73
- > schemes ..... B10/72 to B10/75

Characteristics

Environment

Contactor type			LC1F780
Rated insulation voltage (Ui)	Conforming to IEC 60947-4-1. Overvoltage category III, degree of pollution: 3	**V**	1000
Rated impulse withstand voltage (Uimp)	Coil not connected to the power circuit	**kV**	8
Conforming to standards			IEC/EN 60947-1, IEC/EN 60947-4-1, JIS C 8201-4-1 (except for LC1F1000 & LC1SF1200)
Product certifications			UL, CSA , CCC, CB certification, EAC, ABS, BV, DNV-GL, LRoS, RINA, RMRoS
Degree of protection	Conforming to IEC 60529		IP 20 front face with shrouds LA9F
Climatic withstand			According to IACS E10
Ambient air temperature around the device	Storage	**°C**	-60…+80
	Operation	**°C**	-5…+55
	Permissible at Uc	**°C**	-40…+70
Maximum operating altitude	Without derating	**m**	3000
Operating positions	Without derating		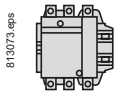 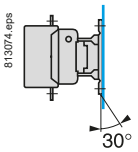 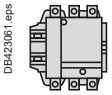 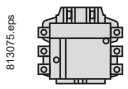 (not to be used for LC1F780, F1000, F1400, F1700, F2100 and F2600)
	With derating		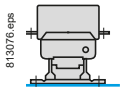 Apply the following derating coefficients: 0.75 on the pull-in voltage, 0.9 on the drop-out voltage and 0.8 on the operational current in AC-1. 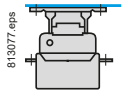 Apply the following derating coefficients: 1.15 on the pull-in voltage, 1.1 on the drop-out voltage and 0.8 on the operational current in AC-1. In either case: neither the making and breaking capacities nor the electrical and mechanical durabilities can be assured.
	Not to be used		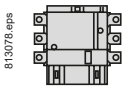
Shock resistance (1) 1/2 sine wave = 11 ms Conforming to IEC/EN 60068-2-27	Contactor open		5 gn
	Contactor closed (2)		15 gn
Vibration resistance (1) 5…300 Hz Conforming to IEC/EN 60068-2-6	Contactor open		2.5 gn
	Contactor closed		5.5 gn

(1) In the least favourable direction, without change of contact state (coil at Uc). Where higher resistance to mechanical shock is required, select shock-proof contactors. Please consult your Regional Sales Office.

(2) 12 gn for F780-F1250 contactors when used with Electronic control module (LA4EM) & LXE coils.

References: pages B10/2 and B10/3
Dimensions: pages B10/32 and B10/33
Schemes: pages B10/36 and B10/37

Characteristics

LC1F1000	LC1SF1200	LC1F1250	LC1F1400	LC1F1700	LC1F2100	LC1F2600
1000	1000	1000	1000	1000	1000	1000
8	8	8	8	8	8	8
IEC/EN 60947-1, IEC/EN 60947-4-1, JIS C 8201-4-1 (except for LC1F1000 & LC1SF1200)						
CB, CSA, CCC	CB, CCC	CB, CSA, CCC, UL				
–	–	–				
-60…+80						
-5…+40	-5…+60	-5…+40				
-40…+60	-40…+70	-40…+60				
3000						

813073.eps 

813074.eps 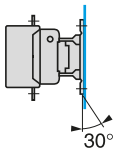

DB423061.eps 

813075.eps 

(not to be used for LC1F780, F1000, F1400, F1700, F2100 and F2600)

Not to be used	Possible positions with derating (see corresponding paragraph on left, same line)	Not to be used	

813078.eps 

6 gn	6 gn	6 gn	6 gn	6 gn	6 gn	6 gn
15 gn	15 gn	15 gn	15 gn	15 gn	15 gn	15 gn
2 gn	2 gn	2 gn	2 gn	2 gn	2 gn	2 gn
4 gn	4 gn (3)	4 gn	4 gn	4 gn	4 gn	4 gn

(3) Vibration resistance 5...30 Hz, when used with Electronic Control Module (ECM).

Characteristics

Pole characteristics

Contactor type			LC1F780	LC1F1000	LC1SF1200	LC1F1250	LC1F1400	LC1F1700	LC1F2100	LC1F2600
Number of poles			3 or 4	3	3	3	3	3	3	3
Rated operational current (Ie) (Ue ≤ 440 V)	In AC-3, θ ≤ 55 °C	A	780	1000	-	-	-	-	-	-
	In AC-1, θ ≤ 40 °C	A	1600	1250	1200	1260	1400	1700	2100 (2)	2600 (4)
Rated operational voltage (Ue)	Up to	V	1000	440	690	690	1000	1000	1000 (5)	1000
Frequency limits	Of the operational current (1)	Hz	$16^{2/3}$…200	$16^{2/3}$…200	$16^{2/3}$…200	$16^{2/3}$…200	$16^{2/3}$…200	$16^{2/3}$…200	$16^{2/3}$…200	$16^{2/3}$…200
Conventional thermal current	θ ≤ 40 °C	A	1600	1250	1200	1260	1400	1700	2100 (2)	2600 (4)
Rated making capacity	I rms conforming to IEC 60947-4-1	A	Making current: 10 x I in AC-3 or 12 x I in AC-4	10 x I in AC-3	Making current: 1.5 x I in AC-1					
Rated breaking capacity	I rms conforming to IEC 60947-4-1	A	Making and breaking current: 8 x I in AC-3 or 10 x I in AC-4	8 x I in AC-3	Making and breaking current: 1.5 x I in AC-1					
Maximum permissible current No current flowing for previous 60 minutes, at θ ≤ 40 °C	For 10 s	A	6250	10000	8000	8000	8000	10000	10000	12000
	For 30 s	A	5600	7500	5200	5200	6000	7500	7500	9000
	For 1 min	A	4600	5500	4000	4000	4500	5500	5500	7000
	For 3 min	A	3000	4200	3000	3000	4000	4200	4200	6000
	For 10 min	A	2200	3000	2000	2000	2600	3000	3000	4000
Short-circuit protection by fuses U ≤ 440 V	Motor circuit (type aM)	A	800	1000	–	–	–	–	–	–
	With thermal overload relay (type gG)	A	1000	1000	–	–	–	–	–	–
	gG fuses	A	2 x 800 (3)	1000	1400	1400	2 x 800 (3)	2 x 800 (3)	2 x 1000 (3)	2 x 1250 (3)
Average impedance per pole	At Ith and 50 Hz	mΩ	0.10	0.12	0.10	0.12	0.10	0.10	0.10	0.10
Power dissipation per pole for the above operational currents	AC-3	W	60	100	–	–	–	–	–	–
	AC-1	W	250	120	120	120	150	200	200	250
Connection										
Bar	Number of bars		2	3	2	2	2	3	4	3
	Bar	mm	100 x 5	100 x 5	50x8	100 x 5	100 x 5	100 x 5	100 x 5	100 x 10
Cable with lug		mm^2	–	–	–	–	–	–	–	–
Cable with connector		mm^2	–	–	–	–	–	–	–	–
Bolt diameter		mm	2 x Ø12	4 x Ø12 (Ø11.5 with set of right-angled connectors LA9F2100)	3 x Ø12	3 x Ø12	4 x Ø12 (Ø11.5 with set of right-angled connectors LA9F2100)			4 x Ø12 (Ø11.5 with set of right-angled connectors LA9F2600)
Tightening torque	Power circuit connections	N.m	58	58 (35 with set of right-angled connectors LA9F2100)	58	58	58 (35 with set of right-angled connectors LA9F2100)			58 (35 with set of right-angled connectors LA9F2600)

(1) Sine wave without interference. Above these values, contactors can be used only for AC-1 application.
*(2) With set of right-angled connectors **LA9F2100** (see page B10/9).*
(3) Paralleling of poles must be carried out only in accordance with the fuse manufacturer's recommendations.
*(4) θ ≤ 60 °C with set of right-angled connectors **LA9F2600** (see page B10/9).*
*(5) Ue =1000 V, with set of right angled connectors **LA9F2100** (see page B10/9).*

Ref.
High power contactors

References: pages B10/2 and B10/3
Dimensions: pages B10/32 and B10/33
Schemes: pages B10/36 and B10/37

Characteristics

a.c. control circuit characteristics with LX1 coil

Contactor type				LC1 F780 (1)	LC1 F1000 (1)	LC1 SF1200	LC1 F1250	LC1 F1400 (1)	LC1 F1700	LC1 F2100 (1)	LC1 F2600 (1)
Rated control circuit voltage (Uc)			**V**	110…500	110...500	220...230	110...600	110...500	110…500	110…500	110…500
Control voltage limits ($\theta \leq 55$ °C)	40…400 Hz coils	Operation		0.85…1.1 Uc	0.85…1.1 Uc	0.85...1.1 Uc	0.85…1.1 Uc	0.85…1.1 Uc	0.85…1.1 Uc	0.85…1.1 Uc	0.85…1.1 Uc
		Drop-out		0.2…0.4 Uc	0.3…0.5 Uc	0.25...0.5 Uc	0.25...0.5 Uc	0.3…0.5 Uc	0.3…0.5 Uc	0.3…0.5 Uc	0.3…0.5 Uc
Average consumption at 20 °C and at Uc	Inrush	40…400 Hz coil	**VA**	1900... 2300	1600... 2400	1050... 1150	1500... 1730	1600... 2400	1600... 2400	1600... 2400	2200... 2700
		Cos φ		0.9	0.9	0.9	0.9	0.9	0.9	0.9	0.9
	Sealed	40…400 Hz coil	**VA**	44...55	29...37	16...20	20...25	29...37	29...37	29...37	37.4...50.6
		Cos φ		0.9	0.9	0.9	0.9	0.9	0.9	0.9	0.9
Heat dissipation			**W**	2 x 22	2 x 18	18	20	2 x 18	2 x 18	2 x 18	2 x 25
Operating time (2)	Closing "C"		**ms**	40…80	40…75	40...75	40…80	40…75	40…75	40…75	40…80
	Opening "O"		**ms**	130…230	100...170	100...170	100...200	100...170	100…170	100…170	100…200
Mechanical durability at Uc	In millions of operating cycles			5	0.5	10	1	0.5	0.5	0.5	0.5
Maximum operating rate at ambient temperature ≤ 55 °C	In operating cycles per hour			600	600	2400	1200	600	600	600	600
Connection				Min/max c.s.a.							
Flexible cable without cable end	1 or 2 conductors		**mm²**	1/4	1/4	1/4	1/4	1/4	1/4	1/4	1/4
Flexible cable with cable end	1 conductor		**mm²**	1/4	1/4	1/4	1/4	1/4	1/4	1/4	1/4
	2 conductors		**mm²**	1/2.5	1/2.5	1/2.5	1/2.5	1/2.5	1/2.5	1/2.5	1/2.5
Solid cable without cable end	1 or 2 conductors		**mm²**	1/4	1/4	1/4	1/4	1/4	1/4	1/4	1/4
Tightening torque			**N.m**	1.2	1.2	1.2	1.2	1.2	1.2	1.2	1.2
Mechanical latching				Mechanical latch blocks LA6DK must not be fitted on LC1F contactors. For similar type of operation, use magnetic latching contactors CR1F. See pages B10/16 to B10/21.							

(1) Equipped with 2 coils.

(2) The closing time "C" is measured from the moment the coil supply is switched on to initial contact of the main poles. The opening time "O" is measured from the moment the coil supply is switched off to the moment the main poles separate.

Ref.
High power contactors

References:
pages B10/2 and B10/3

Dimensions:
pages B10/32 and B10/33

Schemes:
pages B10/36 and B10/37

Characteristics

d.c. control circuit characteristics with LX4 coil

Contactor type				LC1 F780	LC1 F1000	LC1 SF1200 (1)	LC1 F1250	LC1 F1400	LC1 F1700	LC1 F2100	LC1F 2600
Rated control circuit voltage (Uc) ⎓			V	110…440	110…440	48…440	48…250	110…440	110…440	110…440	110…440
Control voltage limits (θ ≤ 55 °C)	Operation			0.85…1.1 Uc	0.85…1.1 Uc	0.85…1.1 Uc	0.85…1.1 Uc	0.85…1.1 Uc	0.85…1.1 Uc	0.85…1.1 Uc	0.85…1.1 Uc
	Drop-out			0.2…0.4 Uc	0.2…0.35 Uc	0.2…0.35 Uc	0.2…0.35 Uc	0.2…0.35 Uc	0.2…0.35 Uc	0.2…0.35 Uc	0.2…0.35 Uc
Average consumption at 20 °C and at Uc	⎓	Inrush	W	1960... 2420	2000... 2200	990... 1220	1420... 1920	2000... 2200	2000... 2200	2000... 2200	2130... 2880
		Sealed	W	42...52	8...10	4.54...8	6.5...12.5	8...10	8...10	8...10	13...25
Average operating time at Uc (2)	Closing "C"		ms	70…80	50…60	50…60	60…70	50…60	50…60	50…60	60…70
	Opening "O"		ms	100…130	45…60	45…60	40…50	45…60	45…60	45…60	40…50
				Note: the arcing time depends on the circuit switched by the poles. For all normal 3-phase applications. the arcing time is less than 10 ms. The load is isolated from the supply after a time equal to the sum of the opening time and the arcing time.							
Mechanical durability at Uc	In millions of operating cycles			5	0.5	1	1	0.5	0.5	0.5	0.5
Maximum operating rate at ambient temperature ≤ 55 °C	In operating cycles per hour			600	600	1200	1200	600	600	600	600
Cabling				Min/max c.s.a.							
	Flexible cable without cable end	1 conductor	mm²	1/4	1/4	1/4	1/4	1/4	1/4	1/4	1/4
		2 conductors	mm²	1/4	1/4	1/4	1/4	1/4	1/4	1/4	1/4
	Flexible cable with cable end	1 conductor	mm²	1/4	1/4	1/4	1/4	1/4	1/4	1/4	1/4
		2 conductors	mm²	1/2.5	1/2.5	1/2.5	1/2.5	1/2.5	1/2.5	1/2.5	1/2.5
	Solid cable without cable end	1 conductor	mm²	1/4	1/4	1/4	1/4	1/4	1/4	1/4	1/4
		2 conductors	mm²	1/4	1/4	1/4	1/4	1/4	1/4	1/4	1/4
Tightening torque			N.m	1.2	1.2	1.2	1.2	1.2	1.2	1.2	1.2
Mechanical latching				Mechanical latch blocks LA6DK must not be fitted on LC1F contactors. For similar type of operation, use magnetic latching contactors CR1F. See pages B10/16 to B10/21.							

(1) LC1SF1200KUE, LC1SF1200MD are available.

(2) The operating times depend on the type of contactor electromagnet and its control mode. The closing time "C" is measured from the moment the coil supply is switched on to initial contact of the main poles. The opening time "O" is measured from the moment the coil supply is switched off to the moment the main poles separate.

Ref.
High power contactors

Life Is On Schneider Electric

Characteristics

a.c. or d.c. control circuit characteristics with LXE coil (1)

Contactor type				LC1SF1200 (3)	LC1F1250 (4)	LC1F2600 (5)
ECM (2) reference				LA4EM250FK	LA4EM250FL	LA4EM250FL2
Coil reference				LXEFK250	LXEFL250	LXEFL2502
Rated control circuit voltage (Uc)	50/60 Hz		V	100…250		
	⎓		V	100…380		100…250
Control voltage limits (< 55 °C) 50/60 Hz	Operation		V	85…275		
	Drop-out		V	< 60		< 65
⎓	Operation		V	85…418		85…275
	Drop-out		V	< 45		< 51
Average consumption at 20 °C and at Uc	Inrush	50/60 Hz	VA rms	360…550	460…730	1100...2300
		Cos φ		0.5…0.6		
		⎓	W	410…500	500…680	1300...2400
	Sealed	50/60 Hz	VA	5.0…8.0	7…10	21.1...24.5
		Cos φ		0.5…0.6		
		⎓		2.7…5.0	4.0…5.5	14...18
Embedded PLC (6) input according IEC 61131-2 type 2	Off state		V DC	0…5		
	On state			11…30		
Heat dissipation			W	2.2...5.5		16...20
Operating time	Closing “C”		ms	40…80		54...88
	Opening “O”		ms	6…54		20...28
Mechanical durability at Uc	In millions of operating cycles			1		0.5
Maximum operating rate at ambient temperature ⩽ 55 °C	In operating cycles per hour			1200		600
Connection (7)						
Flexible cable without cable end	1 conductor			0.2/2.5		
Flexible cable with cable end	1 conductor			0.25/2.5		
Solid cable without cable end	1 conductor			0.2/2.5		
Tightening torque			N.m	0.6		

*(1) LXE coil shall be always used along with Electronic Control Module (ECM) **LA4EM250●●**.*
*(2) Electronic Control Module enables wider coil operating voltage for the F range of contactors. ECM **LA4EM250●●** shall be always used along with suitable type of **LXE●●250** coils.*
*(3) **LC1SF1200KUE** is supplied with **LA4EM250FK** & **LXEFK250**.*
*(4) **LC1F1250KUE** is supplied with **LA4EM250FL** & **LXEFL250**.*
*(5) **LC1F2600KUE** is supplied with **LA4EM250FL2** & **LXEFL2502**.*
(6) PLC control connectors shall be provided by customer (Type MC 1.5/2-ST-3.81).
(7) Connection input is made to Electronic control module (ECM).

References:
pages B10/2 and B10/3
Dimensions:
pages B10/32 and B10/33
Schemes:
pages B10/36 and B10/37

Dimensions

LC1F780

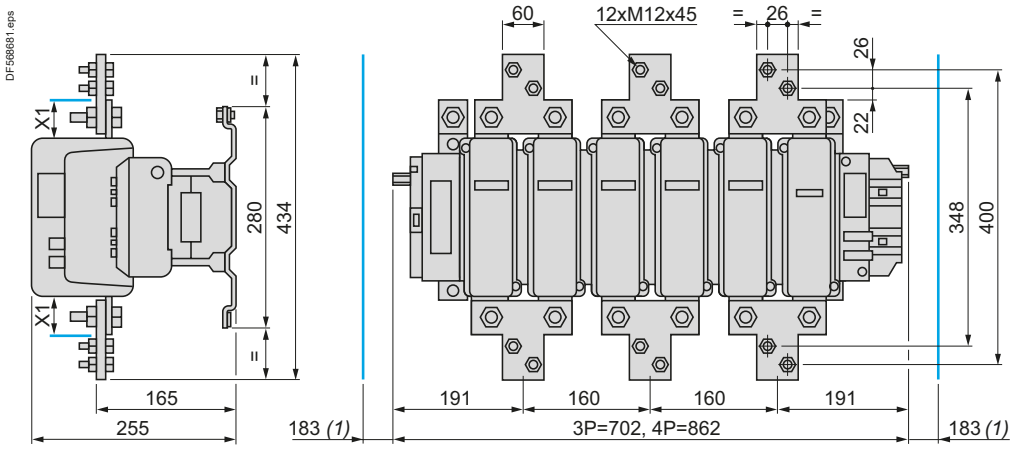

X1 (mm) = Minimum electrical clearance according to operating voltage and breaking capacity.

Voltage	200…500 V	690…1000 V
X1 (mm)	30	35

(1) Minimum distance required for coil removal.

Fixing centres of LC1F7804

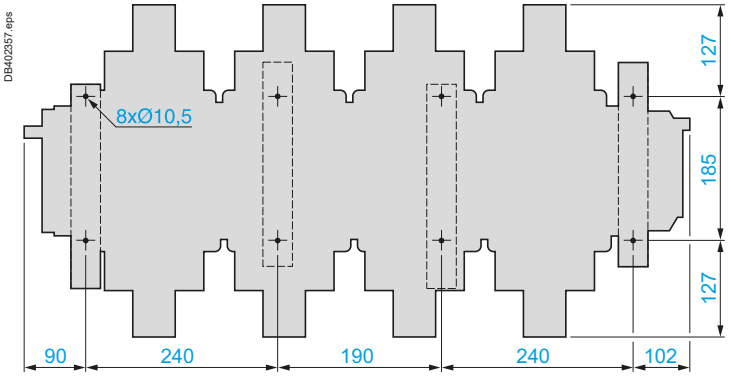

Fixing centres of LC1F780

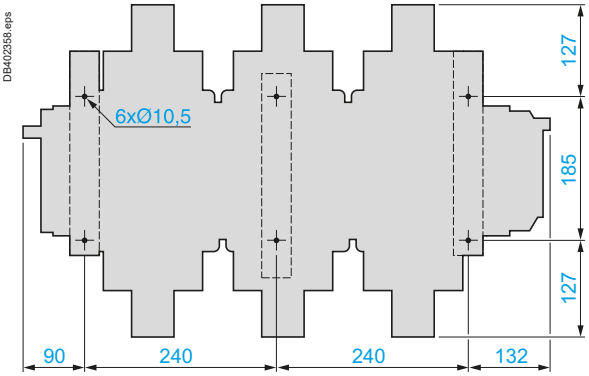

LC1SF1200

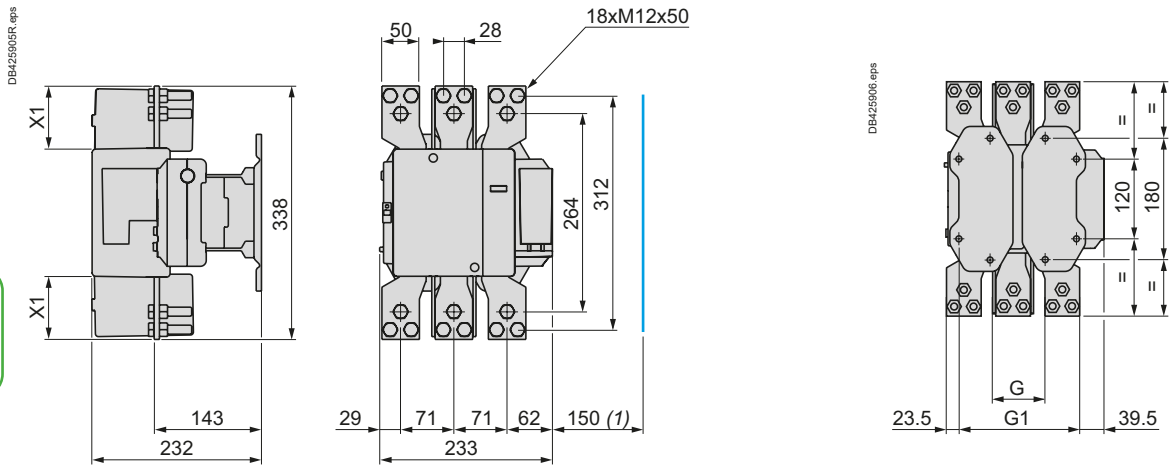

(1) Minimum distance required for coil removal.

X1 (mm) = Minimum electrical clearance according to operating voltage and breaking capacity.

Voltage	200...500 V	≤ 690 V
X1 (mm)	20	30

G (2)	Gmin	Gmax	G1 (2)	Gmin	Gmax
80	66	120	170	156	210

(2) Factory setting.

References:
pages B10/2 and B10/3

Characteristics:
pages B10/26 to B10/30

Schemes:
page B10/37

Dimensions

LC1F1250

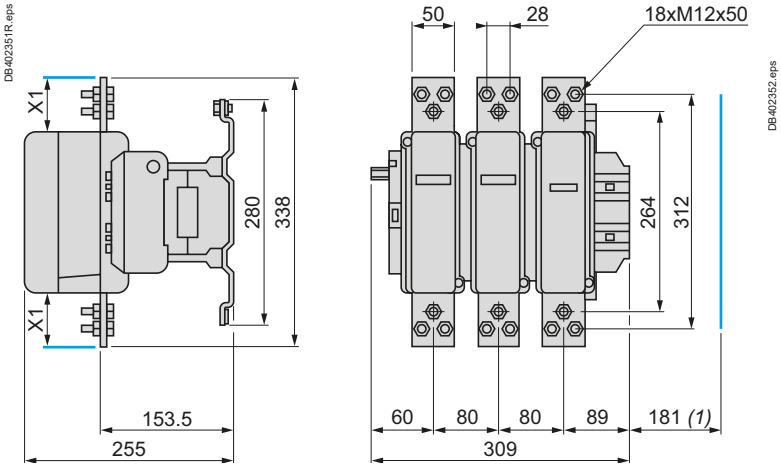

(1) Minimum distance required for coil removal.

X1 (mm) = Minimum electrical clearance according to operating voltage and breaking capacity.

Voltage	200…500 V	690…1000 V
X1 (mm)	20	30

LC1F1000, LC1F1400, LC1F1700 and LC1F2100

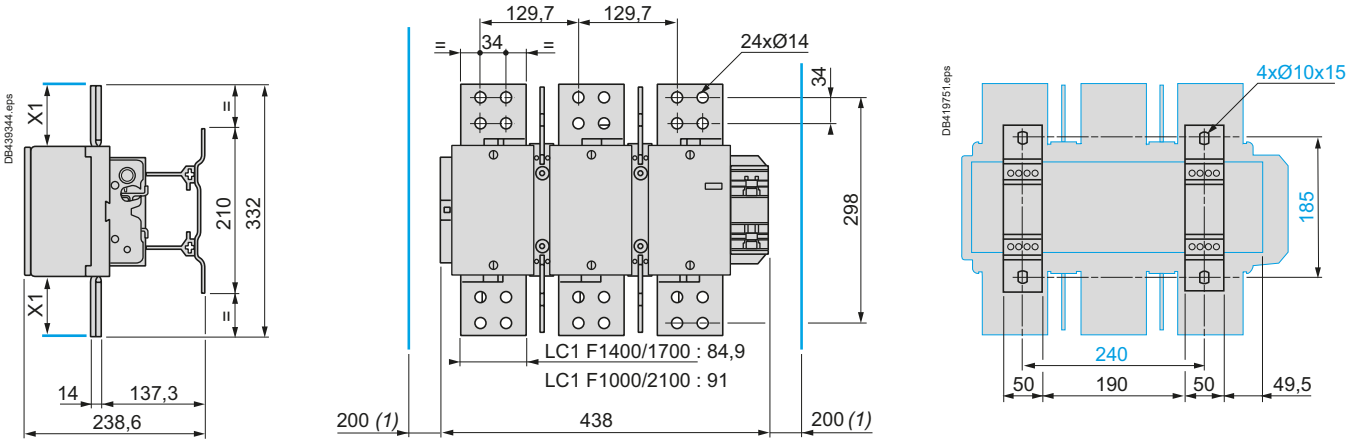

(1) Minimum distance required for coil removal.

X1 (mm) = Minimum electrical clearance according to operating voltage and breaking capacity.

Voltage	200…500 V	690…1000 V
X1 (mm)	90	100

LC1F2600

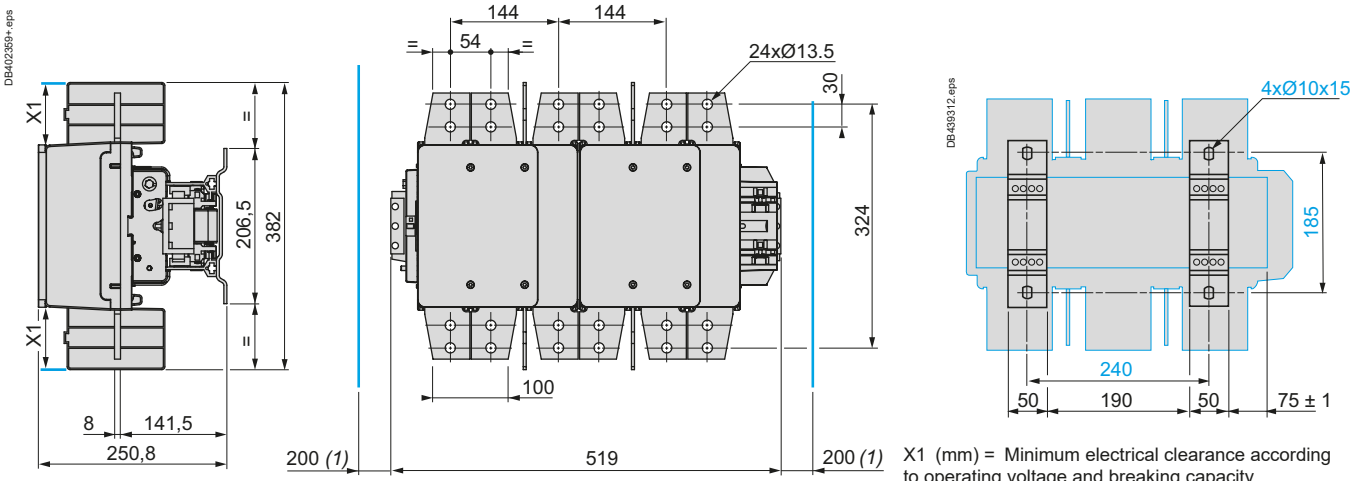

(1) Minimum distance required for coil removal.

X1 (mm) = Minimum electrical clearance according to operating voltage and breaking capacity.

Voltage	200…500 V	690…1000 V
X1 (mm)	90	100

References:
pages B10/2 and B10/3

Characteristics:
pages B10/26 to B10/30

Schemes:
page B10/37

Dimensions

Right-angled connectors LA9F2100
(set of 6) for rear connection

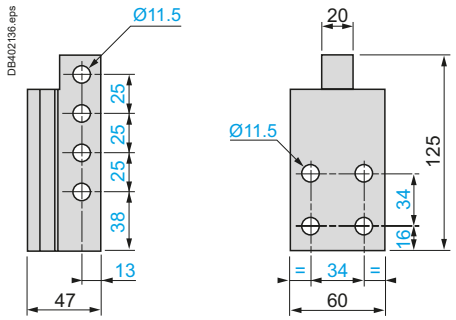

Right-angled connectors LA9F2600
(set of 6) for rear connection

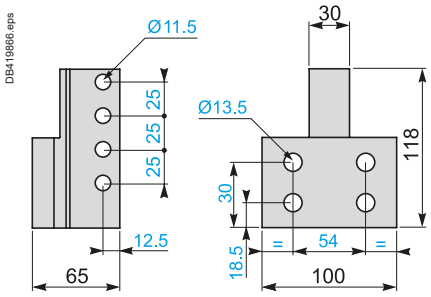

Electronic Control Module for LXE●●250 coils / LXE●●2502 coils

LA4EM250●● / LA4EM250●●2

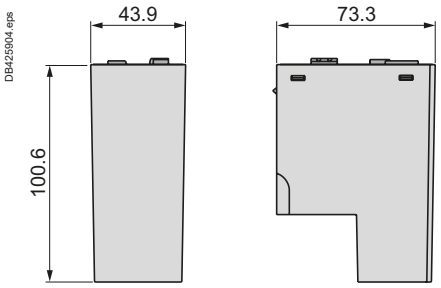

Ref.

High power contactors

LC1F780

On 2 notched rails AM1EC●●●

DB439477.eps

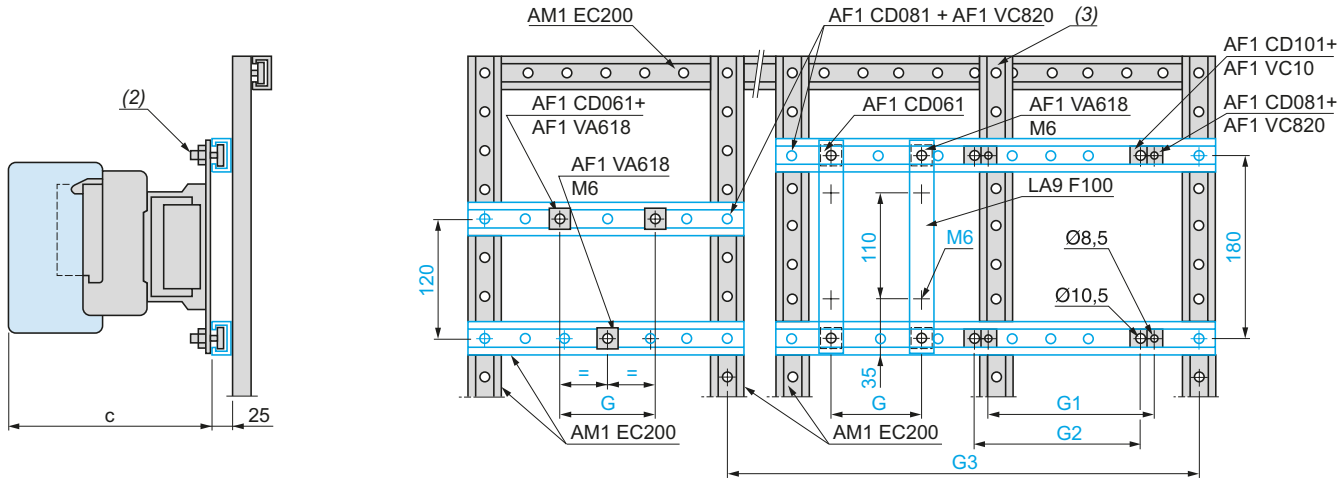

LC1		F780
c (1)	3P	255
	4P	255
G (M6)	3P	–
	4P	–
G1 (∅ 8.5)	3P	–
	4P	–
G2 (∅ 10.5)	3P	See page B10/32
	4P	See page B10/32

(1) See X1 (minimum electrical clearance) page B10/32.
*(2) **AF1CD●●●** and **AF1VA●●●**.*
*(3) This **AM1EC200** upright is required when G2 or G3 is greater than 700 mm (please consult your Regional Sales Office).*

Ref.
High power contactors

Schemes

Contactors

3 and 4-pole contactors

LC1F1250 (coil LX1F ∿)

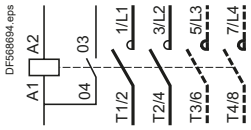

LC1F1250 (coil LX4F ⎓)

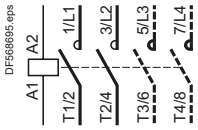

LC1F780 ∿ or ⎓

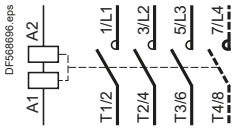

LC1F1000
LC1F1400 ∿ or ⎓ , LC1F1700 ∿ or ⎓
LC1F2100 ∿ or ⎓ , LC1F2600 ∿ or ⎓

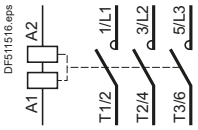

Coils

Standard ∿ coils

LX1FK●●●/ LX1FL●●●

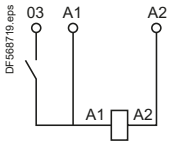

LX1FX
Rectifier supplied and fixed on the contactor

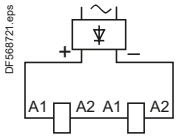

Standard ⎓ coils

LX4FK, FL, FX (1)

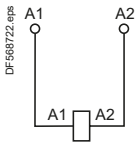

(1) 2 coils in series.

Specific wiring diagrams for CR1F contactors

Internal latching/unlatching diagram

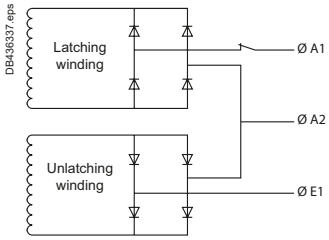

Control diagrams

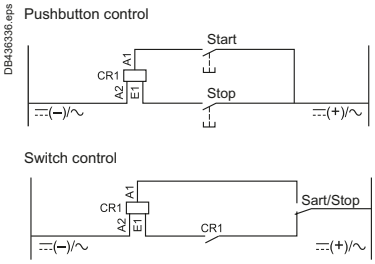

Warning: terminal A2 is common to both windings in all cases.

Contactors CR1F with thermal overload relay

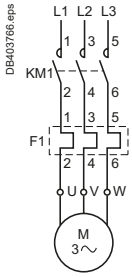

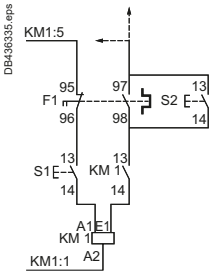

Ref.
High power contactors

Schemes

Add-on blocks

Instantaneous auxiliary contacts

1 N/O LADN10 (1)

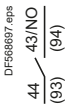

1 N/C LADN01 (1)

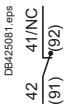

1 N/O + 1 N/C LADN11

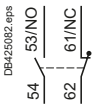

2 N/O LADN20

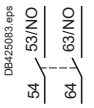

2 N/C LADN02

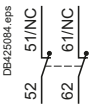

2 N/O + 2 N/C LADN22

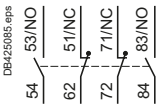

1 N/O + 3 N/C LADN13

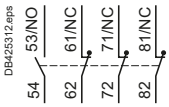

4 N/O LADN40



4 N/C LADN04

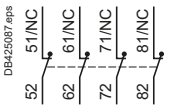

2 N/O + 2 N/C (2) **LADC22**

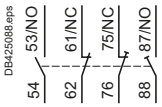

3 N/O + 1 N/C LADN31

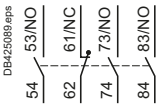

(1) Items in brackets: See "D contactors".

(2) 1 N/O + 1 N/C make before break.

Instantaneous auxiliary contacts with terminal referencing conforming to standard EN 50012 (References: pages B10/6 and B10/7)

1 N/O + 1 N/C
LADN11P

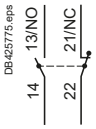

1 N/O + 1 N/C
LADN11G

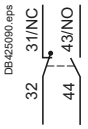

2 N/O + 2 N/C
LADN22P

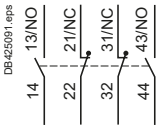

2 N/O + 2 N/C
LADN22G

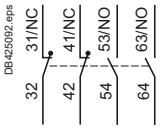

Dust and damp protected instantaneous auxiliary contacts

2 N/O (24-50 V)
LA1DX20

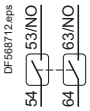

2 N/O (5-24 V) with 2 earth terminals for screened cables
LA1DY20

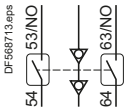

2 N/O protected (24-50 V) + 2 N/O standard
LA1DZ40

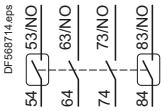

2 N/O protected (24-50 V) + 1 N/O + 1 N/C standard
LA1DZ31

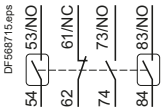

Time delay auxiliary contacts

On-delay 1 N/O +1 N/C LADT●

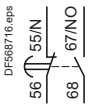

Off-delay 1 N/O + 1 N/C LAD R●

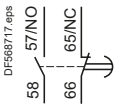

On-delay 1 N/C + 1 N/O break before make LAD S●

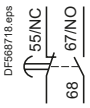

Ref.

High power contactors

References:
pages B10/2 and B10/3

Characteristics:
pages B10/26 to B10/30

PB123835.eps



LC1FG150

PB123836.eps



LC1FG265

Shockproof contactor specificity

In an environment subject to severe mechanical shocks, unwanted closing of a contactor's poles and the serious consequences of this, is not permissible.

Shockproof contactors **LC1FG150** to **FG630** are equipped with an auxiliary electromechanical device which ensures that the contactor is mechanically locked in the “open” position when it’s main electromagnet is not energised.

If the contactor is subjected to mechanical impact, from back to front or from front to back, accidental closing of the poles is then impossible.

In addition, accidental opening of the poles (when the contactor is in the “on” position), is virtually impossible due to the significant pull-in force characteristic of these contactors.

Applications

- **Marine:** on-board equipment, windlasses, capstans, winches, etc…
- **Military equipment:** land, sea, launching silos.
- **Heavy mechanical handling systems:** travelling cranes, cranes, gantries.
- **Conveying and handling:** lifts, hoists, conveyors.
- **Equipment for power stations.**
- **Distribution boards.**

Description of shockproof device

Shockproof contactors **LC1FG●●●** are equipped with:
- a lever **1** that is rotated by the core of the contactor's electromagnet.
- an auxiliary electromagnet (EV) for the locking function.
- an RC circuit (Resistor-Capacitor) to limit overvoltage.

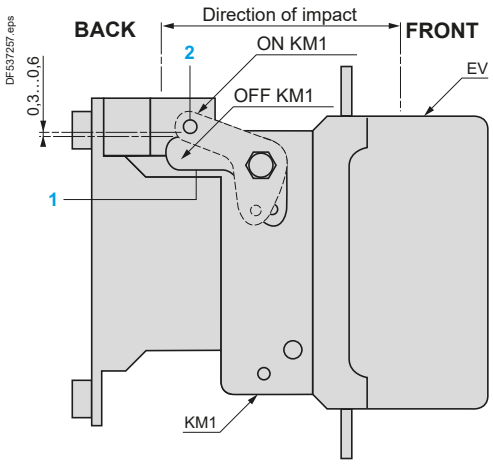

Operation

- In the 'off' position (contactor open and not energised) the core **2** of the electromagnet (EV) locks the lever **1** and therefore the contactor.
- The coils (KM1) and (EV) are energised simultaneously, the core **2** releases the lever **1** and allows the contactor to close.
- De-energisation of the locking electromagnet (EV) is achieved by an auxiliary contact within the contactor.

The core **2** rests freely in lever **1**.
- On de-energisation of coil KM1, the moving contact drops out.

Core **2**, under spring pressure, once again locks lever **1**.

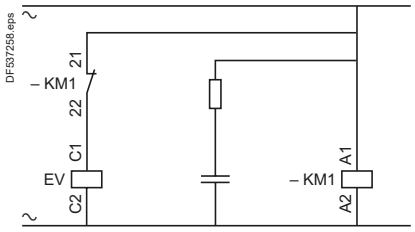

Ref.
High power contactors

References:
page B10/4
Dimensions, schemes:
pages B10/54 and B10/55

Characteristics - Durability (AC)

Use in category AC-3 (Ue ≤ 440 V)

Operational current and power (θ ≤ 55 °C)

Contactors			LC1FG150	LC1FG185	LC1FG265	LC1FG400	LC1FG500	LC1FG630
Operational current		**A**	150	185	265	400	500	630
Operational power Standard power ratings of motors)	220/230 V	**kW**	40	55	75	110	147	200
		hp	*54*	*75*	*100*	*150*	*200*	*270*
	380/400 V	**kW**	75	90	132	200	250	335
		hp	*100*	*185*	*180*	*270*	*340*	*450*
	415 V	**kW**	80	100	140	220	280	375
		hp	*110*	*136*	*180*	*300*	*380*	*500*
	440 V	**kW**	80	100	140	250	295	400
		hp	*110*	*136*	*190*	*340*	*400*	*545*
	500 V	**kW**	90	110	160	257	355	400
		hp	*125*	*150*	*220*	*350*	*480*	*545*
	660/690 V	**kW**	100	110	160	280	335	450
		hp	*136*	*150*	*220*	*380*	*450*	*600*
	1000 V	**kW**	65	100	147	185	335	450
		hp	*85*	*136*	*200*	*250*	*450*	*610*

Maximum operating rate (operating cycles/hour) (1)

On-load factor	Operational power	LC1FG150	LC1FG185	LC1FG265	LC1FG400	LC1FG500	LC1FG630
≤ 85 %	P	750	750	750	500	500	500
≤ 85 %	0.5 P	2000	2000	2000	1200	1200	1200
≤ 25 %	P	1200	1200	1200	1200	1200	1200

(1) Depending on the operational power and the on-load factor (θ ≤ 55 °C).

Electrical durability in utilisation category AC-3 (Ue ≤ 440 V)

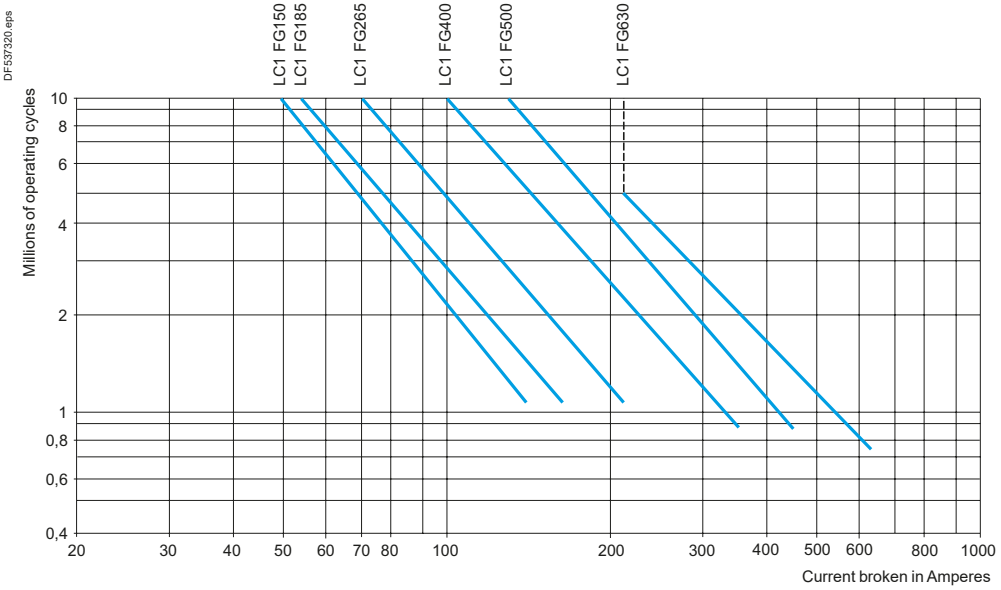

Control of 3-phase asynchronous squirrel cage motors with breaking whilst running.
The current broken (Ie) in category AC-3 is equal to the rated operational current of the motor.
Example:
Asynchronous motor with P = 55 kW - Ue = 380 V - Ie = 105 A
4 million operating cycles required.
The above selection curves show the contactor rating needed: **LC1FG265**.

References:
page B10/4
Dimensions, schemes:
pages B10/54 and B10/55

Characteristics - Durability (AC)

Use in category AC-1 (Ue ≤ 440 V)

Contactors				LC1FG150	LC1FG185	LC1FG265	LC1FG400	LC1FG500	LC1FG630
Connection	Cable	C.s.a.	mm²	120	150	240	–	–	–
	Bar	Number		–	–	–	2	2	2
		C.s.a.	mm	–	–	–	30 x 5	40 x 5	60 x 5
Maximum operating rate in operating cycles/hour				600	600	600	600	600	600
Operational current AC-1		≤ 40 °C	A	250	270	350	500	700	1000
		≤ 55 °C	A	220	240	300	430	580	850
		≤ 70 °C (1)	A	170	180	250	340	500	700

(1) Only for operation with coil supplied at Uc.

Increase in operational current by parallel connection of poles

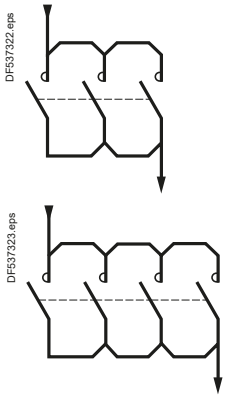

Apply the following multiplying factors to the current values given above.
The factors take into account the often unbalanced current distribution between the 2 poles:
- 2 poles in parallel: K = 1.6
- 3 poles in parallel: K = 2.25
- 4 poles in parallel: K = 2.8.

Recommended connection scheme to equalise the currents in each pole (see opposite).

Electrical durability in utilisation category AC-1 (Ue ≤ 440 V)

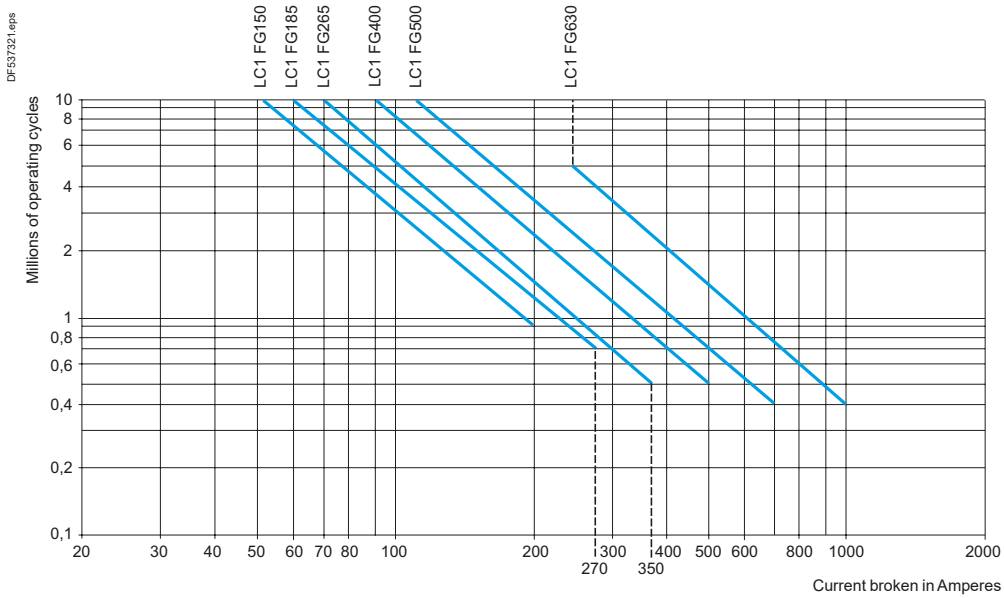

Example:
Control of resistive circuits (cos φ ≥ 0.95).
The current broken (Ic) in category AC-1 is equal to the current (Ie) normally drawn by the load.
Ue = 220 V - Ic = Ie = 300 A - θ = 40 °C.
1 million operating cycles required.
The above selection curves show the contactor rating needed: **LC1FG400**.

References:
page B10/4

Dimensions, schemes:
pages B10/54 and B10/55

Characteristics - Durability (AC)

Thermal limits in utilisation categories AC-2/AC-4

Contactors		LC1 FG150	LC1 FG185	LC1 FG265	LC1 FG400	LC1 FG500	LC1 FG630
Thermal limit zone	**Operating cycles/hour (1) and on-load factor**	**Maximum current broken according to the duty requirements** (thermal limit, ambient temperature ⩽ 55 °C)					
A	From 150 and 15 % to 300 and 10 %	310	380	560	780	1100	1400
B	From 150 and 20 % to 600 and 10 %	280	350	500	700	950	1250
C	From 150 and 30 % to 1200 and 10 %	240	300	400	600	750	950
D	From 150 and 55 % to 2400 and 10 %	190	240	320	450	600	720
E	From 150 and 85 % to 3600 and 10 %	145	170	230	350	500	660

(1) Do not exceed the maximum limit for the mechanical operating cycles.

Counter current braking (plugging)

The current varies from the maximum plug-braking current to the rated motor current.
The current made must be compatible with the making and breaking capacities of the contactor.

In most cases, breaking occurs at a current value close to the locked rotor current and contactor selection can therefore be made using the criteria for utilisation categories AC-2 and AC-4.

Electrical durability in utilisation categories AC-2/AC-4 (Ue ⩽ 440 V)

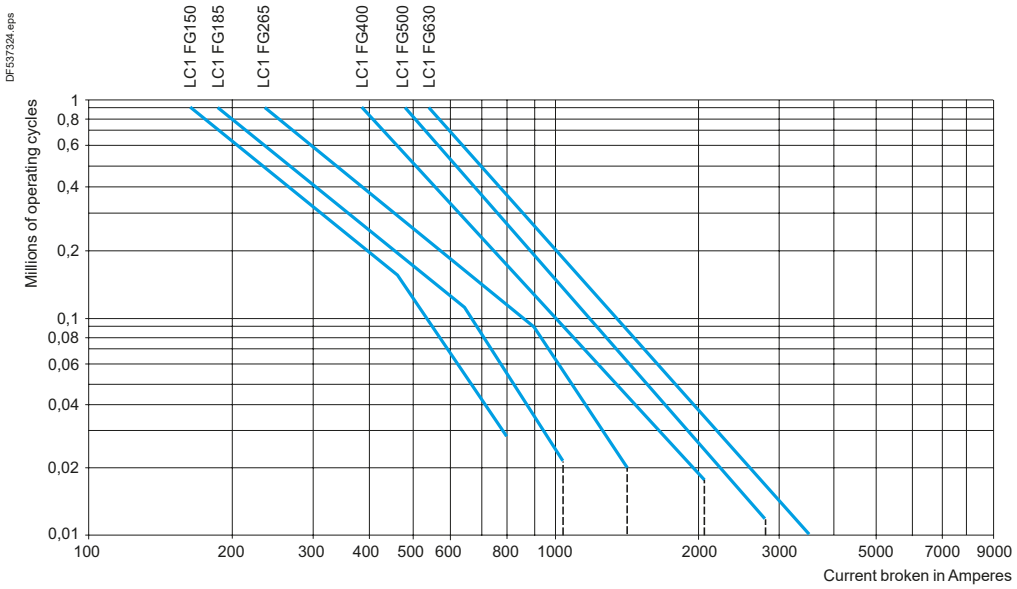

Example: Contactor selection

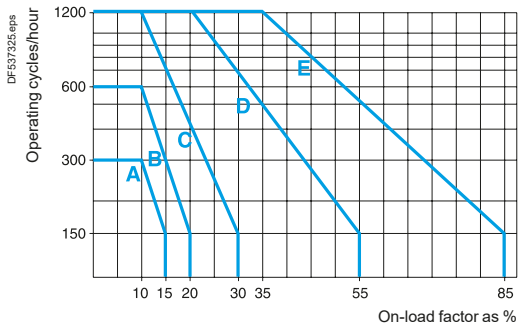

For an on-load factor of 10 % at 400 operating cycles per hour, the curve on the left indicates zone B. If the current broken is 600 A, the above table leads to selection of an **LC1FG400** contactor. Referring to the electrical durability curves, it can be seen that the contactor will be able to perform 350 000 operating cycles. Where a higher value of electrical durability is required, 1 million operating cycles for example, an **LC1FG630** contactor would be recommended.

Ref.
High power contactors

Switching 3-phase capacitors

Capacitors, together with the circuits to which they are connected, form oscillatory circuits which can, at the moment of switch-on, give rise to high transient currents (> 180 In) at high frequencies (1 to 15 kHz).
The contactors are used for direct switching. The values of peak current at switch-on must not exceed the values indicated below.

An inductor or an early break resistor may be inserted in each of the three phases supplying the capacitors to reduce the peak current, if necessary. This must be done when switching multiple step capacitor banks.
Inductance values are determined according to the selected operating temperature: please refer to our “Motor starter solutions - Control and protection components” catalogue.

In addition, in accordance with standards IEC 60070, NF C 54 100, VDE 0560, the switching contactor must be able to withstand a continuous current of 1.43 times the rated current of the capacitor bank step being switched. The rated operational powers given in table the below take this overload into account.

Short-circuit protection is normally provided by g1 fuses rated at 1.3 to 1.6 In.

Maximum operational power of contactors

Maximum operating rate: 120 operating cycles/hour.
Electrical durability at maximum load: 100 000 operations.
With choke inductors connected, where necessary.

Operational power at 50/60 Hz						Maximum peak current	Contactor to be used
$\theta \leq 40$ °C			$\theta \leq 55$ °C				
220 V 240 V	400 V 440 V	600 V 660 V	220 V 240 V	400 V 440 V	600 V 660 V		
kvar	kvar	kvar	kvar	kvar	kvar	A	
60	100	135	40	85	90	3200	**LC1FG150**
70	125	160	50	100	100	3500	**LC1FG185**
90	160	225	75	125	125	5000	**LC1FG265**
125	220	300	100	160	200	8000	**LC1FG400**
180	300	400	125	220	300	10 000	**LC1FG500**
250	400	600	190	350	500	12 000	**LC1FG630**

Switching the primaries of 3-phase transformers (LV/LV)

When a transformer is switched on, there is generally an initial current surge which can reach 20 to 40 times the rated current for the power ratings shown below.
This current reaches its peak value almost instantaneously and then decreases in a largely exponential manner, quickly dropping back down to its steady state value.

Contactor selection

Operating rate less than 120 operating cycles/hour.
Maximum operational voltages: 690/1000 V 50/60 Hz (2).
The value of the peak magnetising current must be lower than the values indicated below.
Maximum ambient temperature: 55 °C.

Contactor			LC1FG150	LC1FG185	LC1FG265	LC1FG400	LC1FG500	LC1FG630
Maximum permissible current peak at switch-on		**A**	1700	2800	3500	5500	6800	9000
Maximum operational power (1)	220 V	**kVA**	25	40	50	75	100	140
	380 V	**kVA**	50	75	90	130	170	225
	415/440 V	**kVA**	55	80	100	140	190	250
	500 V	**kVA**	65	95	110	170	225	280
	660 V	**kVA**	80	120	140	200	270	315
	1000 V	**kVA**	100	150	200	250	375	470

(1) Maximum operational power corresponding to a current peak at switch-on of 30 In.
(2) Refer to page B10/48 and B10/49 for details on operational voltage.

References: page B10/4
Dimensions, schemes: pages B10/54 and B10/55

Characteristics (DC)

Use in category DC-1 (resistive loads; time constant L/R ⩽ 1 ms)

Rated operational current Ie

Operational voltage (Ue)	Number of poles to be wired in series	Contactors					
		LC1 FG150	LC1 FG185	LC1 FG265	LC1 FG400	LC1 FG500	LC1 FG630
V		A	A	A	A	A	A
24	1	160	220	300	400	600	850
	2	160	220	300	400	600	850
	3	160	220	300	400	600	850
	4	160	220	300	400	600	850
48/75	1	160	220	300	400	600	850
	2	160	220	300	400	600	850
	3	160	220	300	400	600	850
	4	160	220	300	400	600	850
125	1	–	–	–	–	–	–
	2	130	170	300	400	550	850
	3	130	170	300	400	600	850
	4	130	170	300	400	600	850
225	1	–	–	–	–	–	–
	2	100	150	250	350	450	700
	3	130	170	300	400	600	850
	4	130	170	300	400	600	850
300	3	100	150	250	350	450	700
	4	130	170	300	400	600	850
460	4	100	150	250	350	450	700

Use in category DC-2 to DC-5 (inductive loads; time constant L/R ⩽ 15 ms)

Rated operational current Ie

Operational voltage (Ue)	Number of poles to be wired in series	Contactors					
		LC1 FG150	LC1 FG185	LC1 FG265	LC1 FG400	LC1 FG500	LC1 FG630
V		A	A	A	A	A	A
24	1	140	180	280	350	550	850
	2	140	180	280	350	550	850
	3	140	180	280	350	550	850
	4	140	180	280	350	550	850
48/75	1	140	180	280	350	550	850
	2	140	180	280	350	550	850
	3	140	180	280	350	550	850
	4	140	180	280	350	550	850
125	1	–	–	–	–	–	–
	2	100	140	250	350	550	850
	3	120	160	280	350	550	850
	4	120	160	280	350	550	850
225	1	–	–	–	–	–	–
	2	80	100	200	280	450	700
	3	100	140	250	350	550	850
	4	120	160	280	350	550	850
300	3	80	100	200	280	450	700
	4	120	160	280	350	550	850
460	4	80	100	200	280	450	700

Ref.
High power contactors

References: page B10/4
Dimensions, schemes: pages B10/54 and B10/55

Electrical durability

Utilisation categories DC-1 to DC-5

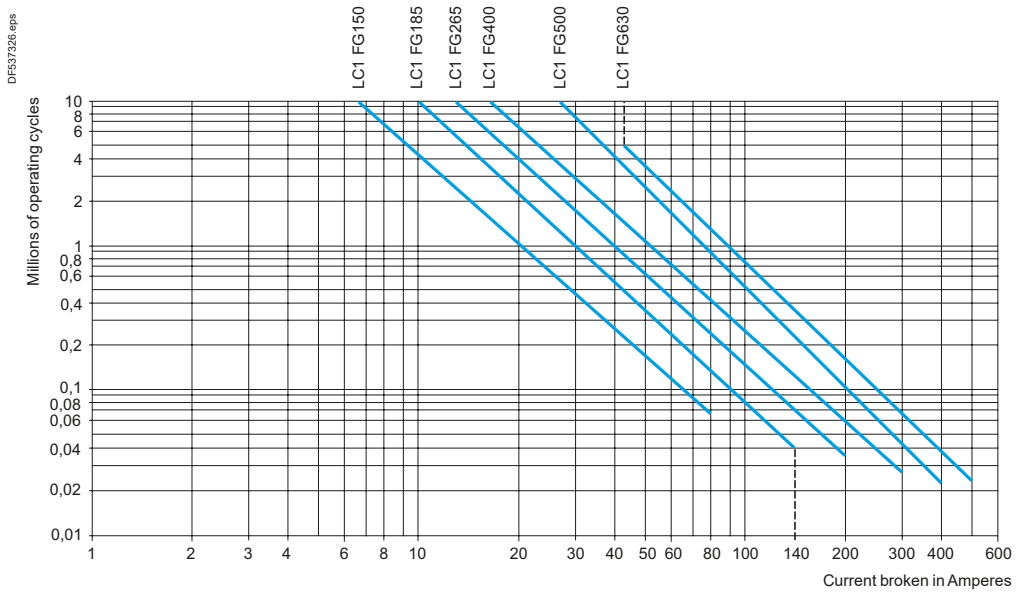

Determining the electrical durability

The electrical durability can be read directly from the curve above, having previously calculated the power broken Pc. The following table gives, for each utilisation category, the value of Pc according to the operational current Ie and the operational voltage Ue.

Utilisation categories		**Pc** (Power broken)
DC-1	Non-inductive loads	Pc = Ue x Ie
DC-2	Shunt motors, breaking whilst running	Pc = 0.1 Ue x Ie
DC-3	Shunt motors, reversing	Pc = Ue x 2.5 Ie
DC-4	Series wound motors, breaking whilst running	Pc = 0.3 Ue x Ie
DC-5	Series wound motors, reversing	Pc = Ue x 2.5 Ie
Counter current braking (plugging)		Pc = 1.5 Ue x 1.5 Ie

Example:
Series wound motor, breaking whilst motor running, category DC-4.
P = 50 kW, Ue = 200 V, Ie = 250 A.
Select contactor **LC1FG265** with 3 poles in series.
The power broken is: Pc = 0.3 Ue x Ie = 0.3 x 200 x 250 = 15 kW.
The electrical durability read from the curve is 8 million operating cycles.

Maximum operating rate

The following operating rate used at Ie must not be exceeded: 120 operating cycles/hour.

Use of poles in parallel

The electrical durability is equal to the number of operating cycles performed by a pole, multiplied by the number of poles in parallel, multiplied by a coefficient of 0.70.

Ref.
High power contactors

References:
page B10/4
Dimensions, schemes:
pages B10/54 and B10/55

Characteristics

Environment

Contactor type			LC1FG150	LC1FG185
Rated insulation voltage (Ui)	Conforming to IEC 60947-4-1	**V**	1000	
Rated impulse withstand voltage (Uimp)	Coil not connected to the power circuit	**kV**	8	
Conforming to standards			IEC/EN 60947-4-1	
Product certifications			N.A.T.O.	
Degree of protection	Conforming to IEC 60529		IP 20 front face with shrouds LA9F	
Ambient air temperature around the device	Storage	**°C**	-60…+80	
	Operation	**°C**	-5…+55	
	Permissible at Uc (1)	**°C**	-40…+70	
Maximum operating altitude	Without derating	**m**	3000	
Operating positions	Without derating		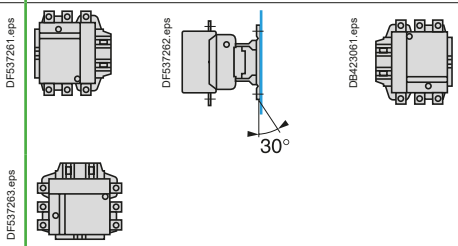	
	With derating (3)		**Fixing A** 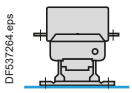 **Fixing B** 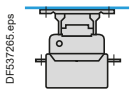	
	Not to be used		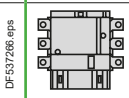	
Shock resistance (2) Conforming to IEC/EN 60068-2-27			12 g, 50 ms on the three axes: X, Y, Z	
			15 g, 11 ms on the three axes: X, Y, Z	

*(1) In these conditions, it is recommended that coils LX9F be used for contactor sizes **FG150** to **FG265**.*
(2) In the least favourable direction, without change of contact state (coil at Uc).
(3) Horizontal fixing:
- the operational current AC-1 is equivalent to 80 % of the value indicated in the catalogue
- breaking and making capacities not guaranteed
- mechanical and electrical durabilities not guaranteed.

Derating of pull-in and drop-out voltage

Contactors LC1		FG150	FG185	FG265	FG400	FG500	FG630
Fixing A	Pull-in	75 %	75 %	75 %	80 %	80 %	80 %
	Drop-out	105 %	105 %	105 %	110 %	110 %	110 %
Fixing B	Pull-in	115 %	115 %	115 %	120 %	120 %	120 %
	Drop-out	90 %	90 %	90 %	95 %	95 %	95 %

Ref.
High power contactors

References: page B10/4
Dimensions, schemes: pages B10/54 and B10/55

Life Is On Schneider Electric

Characteristics

LC1FG265	LC1FG400	LC1FG500	LC1FG630
1000			
8			
IEC/EN 60947-4-1			
N.A.T.O.			
IP 20 front face with shrouds LA9F			
-60…+80			
-5…+55			
-40…+70			
3000			
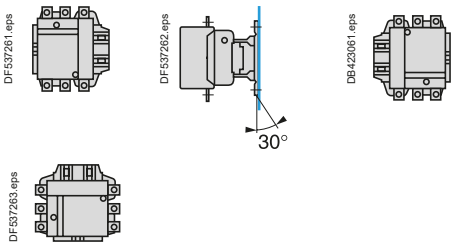			
A 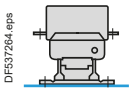			
B 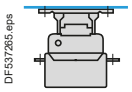			
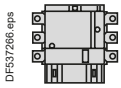			
12 g, 50 ms on the three axes: X, Y, Z			
15 g, 11 ms on the three axes: X, Y, Z			

Characteristics

Pole characteristics

Contactor type				LC1FG150	LC1FG185
Number of poles				3	3
Rated operational current (Ie) (Ue ≤ 440 V)	In AC-3, θ ≤ 55 °C	θ ≤ 70 °C	A	150/150	185/180
	In AC-1, θ ≤ 55 °C	θ ≤ 70 °C	A	220/170	240/180
Rated operational voltage (Ue)	Up to		V	690	690
Frequency limits	Of the operational current (1)		Hz	25 to 200	25 to 200
Conventional thermal current	θ ≤ 40		°C	250	275
Rated making capacity	I rms conforming to IEC 60947-4-1		A	Making current: 10 x I in AC-3	
Rated breaking capacity	I rms conforming to IEC 60947-4-1		A	Making and breaking current: 8 x I in cat. AC-3	
Permissible short time rating No current flowing for preceding 60 minutes with θ ≤ 40 °C	For 1.5 or 10 s		A	1200	1500
	For 30 s		A	700	920
	For 1 mn		A	600	740
	For 3 mn		A	450	500
	For 10 mn		A	350	400
Fuse protection against short-circuits (U ≤ 440 V)	Motor circuit (type aM)		A	160	200
	With thermal overload relay (type gG)		A	200	315
	gG fuses		A	250	315
Average impedance per pole	At Ith and 50 Hz		mΩ	0.35	0.33
Power dissipation per pole for the above operational currents	AC-3		W	8	12
	AC-1		W	22	25
Cabling Minimum c.s.a.	Bar	No. of bars		2	2
		Bar	mm	25 x 3	25 x 3
	Cable with lug		mm²	120	150
	Cable with connector		mm²	120	150
	Bolt diameter		mm	Ø8	Ø8
Tightening torque	Power circuit connections		N.m	18	18

(1) Sine wave without interference. Above these values, please consult your Regional Sales Office.
(2) Ue ≤ 690 V in AC-3; Ue ≤ 1000 V in AC-1.

Ref.
High power contactors

References: page B10/4
Dimensions, schemes: pages B10/54 and B10/55

Characteristics

LC1FG265	LC1FG400	LC1FG500	LC1FG630
3	3	3	3
265/250	400/340	500/500	630/630
300/250	430/340	580/500	850/700
1000 (2)	1000	1000 (2)	1000
25 to 200	25 to 200	25 to 200	25 to 200
350	500	700	1000
Making current: 10 x I in AC-3			
Making and breaking current: 8 x I in AC-3			
2200	3600	4200	5050
1230	2400	3200	4400
950	1700	2400	3400
620	1200	1500	2200
480	1000	1200	1600
315	400	500	630
500	630	800	800
400	500	800	1000
0.3	0.26	0.18	0.12
21	42	45	48
37	65	88	120
2	2	2	2
32 x 4	30 x 5	40 x 5	60 x 5
240	2 x 150	2 x 240	–
240	–	–	–
Ø10	Ø10	Ø10	Ø12
35	35	35	58

Characteristics

a.c. control circuit characteristics with LX1 coil

Contactor type					LC1FG150	LC1FG185
Rated control circuit voltage (Uc)		50 or 60 Hz		V	48…440	
Control voltage limits (θ ≤ 55 °C)	40…400 Hz coils	Operation			0.85...1.1 Uc	
		Drop-out			0.20...0.55 Uc	
Average consumption at 20 °C and at Uc	∼ 50 Hz	Inrush	40…400 Hz coil	VA	690...855	950...1180
			Cos φ		0.9	0.9
		Sealed	40…400 Hz coil	VA	6.6...8.1	8.9...10.9
			Cos φ		0.9	0.9
Heat dissipation				W	5.9...7.2	8...9.8
Operating time [1]		Closing "C"		ms	35	35
		Opening "O"		ms	130	130
Mechanical durability at Uc		In millions of operating cycles			10	10
Maximum operating rate at ambient temperature ≤ 55 °C		In operating cycles per hour			2400	2400
Cabling Min/max c.s.a.	Flexible cable without cable end		1 or 2 conductors	mm^2	1/4	1/4
	Flexible cable with cable end		1 conductor	mm^2	1/4	1/4
			2 conductors	mm^2	1/2.5	1/2.5
	Solid cable without cable end		1 or 2 conductors	mm^2	1/4	1/4
Tightening torque				N.m	1.2	1.2

Characteristics of the locking electromagnet (shockproof device)

Contactor type		LC1FG150	LC1FG185
Control circuit voltage 40...400 Hz	V	48…440	48…440
Inrush consumption	VA	100	100
Maximum energisation time at Uc	ms	20	20
Maximum operating rate (In operating cycles per hour)		2400	2400
Mechanical durability at Uc (In millions of operating cycles)		1×10^6	1×10^6

(1) The closing time "C" is measured from the moment the coil supply is switched on to initial contact of the main poles.
The opening time "O" is measured from the moment the coil supply is switched off to the moment the main poles separate.

Ref.
High power contactors

References: page B10/4
Dimensions, schemes: pages B10/54 and B10/55

Characteristics

LC1FG265	**LC1FG400**	**LC1FG500**	**LC1FG630**
48…440	110…440	110…440	110…440
0.85…1.1 Uc	0.85…1.1 Uc	0.85…1.1 Uc	0.85…1.1 Uc
0.35…0.55 Uc	0.3…0.5 Uc	0.3…0.5 Uc	0.25…0.5 Uc
650	1075	1100	1650
0.9	0.9	0.9	0.9
10	15	18	22
0.9	0.9	0.9	0.9
8	14	18	20
40…65	40…75	40…75	40…80
100…170	100…170	100…170	100…200
10	10	10	10
2400	2400	2400	1200
1/4	1/4	1/4	1/4
1/4	1/4	1/4	1/4
1/2.5	1/2.5	1/2.5	1/2.5
1/4	1/4	1/4	1/4
1.2	1.2	1.2	1.2

LC1FG265	**LC1FG400**	**LC1FG500**	**LC1FG630**
48…440	110…440	110…440	110…440
100	100	100	100
20	20	20	20
2400	2400	2400	1200
1×10^6	1×10^6	1×10^6	1×10^6

Characteristics

Environment

Contact block type			LADN	LADT and LADS	LADR
Conforming to standards			IEC 60947-5-1, EN 60947-5-1		
Product certifications			UL, CSA		
Degree of protection	Conforming to IEC 60529		Protection against direct finger contact IP2X		
Ambient air temperature around the device	Storage	°C	-60…+80		
	Operation	°C	-5…+60		
	Permissible for operation at Uc	°C	-40…+70		
Maximum operating altitude	Without derating	m	3000		
Cabling	Phillips n° 2 and Ø6 mm. Flexible or solid cable with or without cable end	mm^2	Min: 1 x 1; max: 2 x 2.5		

References:
page B10/15

Dimensions and schemes:
page B10/55

Life Is On Schneider Electric

Characteristics

Instantaneous and time delay contact characteristics

Contact block type				LADN	LADT and LADS	LADR
Number of contacts				1 or 4	2	2
Rated operational voltage (Ue)	Up to		V	660		
Rated insulation voltage (Ui)	Conforming to IEC 60947-5-1		V	690		
	Conforming to UL, CSA		V	600		
Conventional thermal current (Ith)	For ambient temperature ≤ 60 °C		A	10		
Frequency of the operational current			Hz	25…400		
Minimum switching capacity	U min		V	17		
	I min		mA	5		
Short-circuit protection	Conforming to IEC 60947-5-1 and VDE 0660. gG fuse		A	10		
Rated making capacity	Conforming to IEC 60947-5-1, I rms		A	∼ 140; ⎓ 250		
Short-time rating	Permissible for	1 s	A	100		
		500 ms	A	120		
		100 ms	A	140		
Insulation resistance			MΩ	> 10		
Non-overlap time	Guaranteed between N/C and N/O contacts		ms	1.5 (on energisation and on de-energisation)		
Time delay (LADT, R and S contact blocks) Accuracy only valid for setting range indicated on the front face	Ambient air temperature for operation		°C	–	-40…+70	-40…+70
	Repeat accuracy			–	±2 %	±2 %
	Drift up to 0.5 million operating cycles			–	+15 %	+15 %
	Drift depending on ambient air temperature			–	0.25 % per °C	0.25 % per °C
Mechanical durability	In millions of operating cycles			30	5	5

Rated operational power of contacts Conforming to IEC 60947-5-1			24	48	110/127	220/230	380/400	440	600
	1 million operating cycles	VA	150	300	400	480	500	500	500
	3 million operating cycles	VA	80	170	250	290	320	320	320
	10 million operating cycles	VA	30	65	90	120	130	130	130
	Occasional making capacity	VA	1200	2600	7000	13 000	15 000	13 000	9000

Ref.
High power contactors

References: page B10/15
Dimensions and schemes: page B10/55

Dimensions

Dimensions

LC1FG150, FG185 and FG265

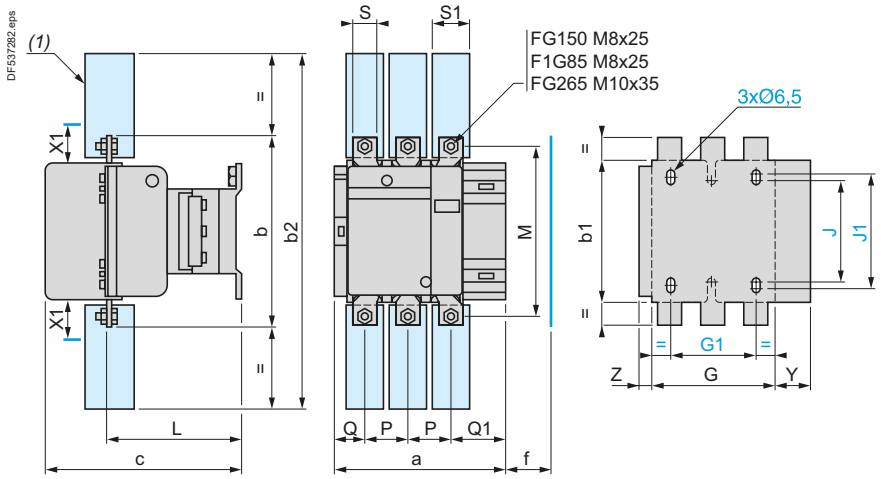

X1 (mm) = Minimum electrical clearance according to operating voltage and breaking capacity.

LC1	200…500 V	600…1000 V
FG150	10	15
FG185	10	15
FG265	10	15

(1) Power terminal protection shroud (see page B10/10).

LC1	a	b	b1	b2	c	f	G	G1	J	J1	L	M	P	Q	Q1	S	S1	Y	Z
FG150	181	170	137	301	180	131	106	80	106	120	116	150	40	26	57.5	20	34	44	13.5
FG185	183.5	174	137	305	190	130	111	80	106	120	122.5	154	40	29	59.5	20	34	44	13.5
FG265	217.5	203	145	375	222	147	142	96	106	120	150	178	48	39	66.5	25	44.5	38	21.5

f = minimum distance required for coil removal.

LC1FG400 and FG500

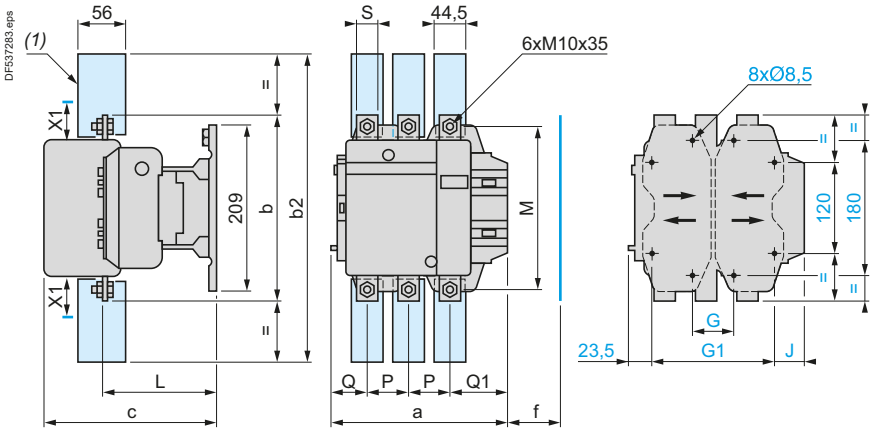

X1 (mm) = Minimum electrical clearance according to operating voltage and breaking capacity.

LC1	200…500 V	600…1000 V
FG400	15	20
FG500	15	20

(1) Power terminal protection shroud (see page B10/10).

LC1	a	b	b2	c	f	G supplied	G min.	G max.	G1 supplied	G1 min.	G1 max.	J	L	M	P	Q	Q1	S
FG400	237	206	375	234	146	80	66	102	223	156	192	19.5	160	181	48	75	74	25
FG500	257	238	400	247	150	80	66	120	223	156	210	39.5	181	208	55	78	77	30

f = minimum distance required for coil removal.

Ref.
High power contactors

Dimensions

LC1FG630

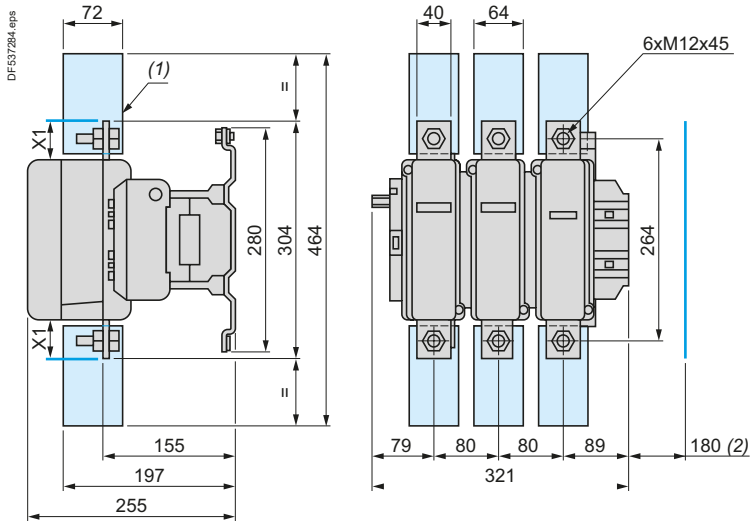

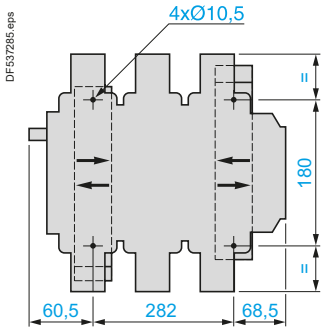

X1 (mm) = Minimum electrical clearance according to operating voltage and breaking capacity.

LC1	200…500 V	690…1000 V
FG630	20	30

(1) Power terminal protection shroud (see page B10/10).
(2) Minimum distance required for coil removal.

Schemes

Contactors LC1-FG150 to FG630

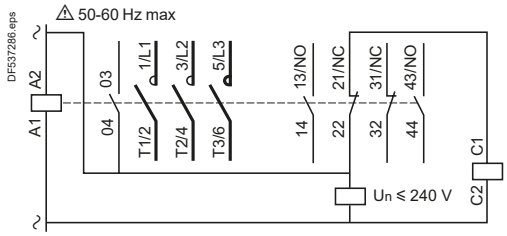

Add-on blocks

Instantaneous auxiliary contacts

1 N/O LADN10

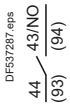

1 N/C LADN01

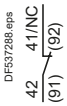

2 N/O + 2 N/C LADN22

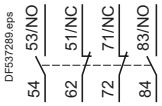

4 N/O LADN40

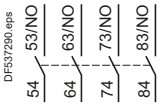

4 N/C LADN04

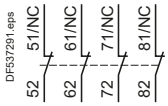

3 N/O + 1 N/C LADN31

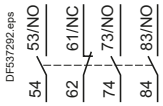

Time delay auxiliary contacts

On-delay 1 N/O + 1 N/C LADT●

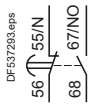

Off-delay 1 N/O + 1 N/C LADR●

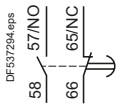

Coils ∿

LX1FH, FJ, FK and FL

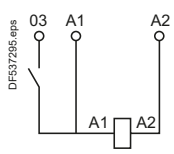

References:
pages B10/4, B10/16 and B10/17
Characteristics:
pages B10/38 to B10/53

PB108370.eps



CR1F500

Magnetic latching contactors

Magnetic latching contactors of both block and bar mounted types are fitted with a special electromagnet which enables them to remain in the “On” position when the coil is no longer energised.

Applications

The special properties of magnetic latching contactors make them suitable for a large number of applications.

Properties

- Retention of the sequence memory in automatic control equipment in the event of loss of control voltage.
- Energy saving, since the source of supply to the coil does not need to supply current when the contactor is latched in the closed state.
- Change of state from “Closed” to “Open” by current signal through the coil.
- Unaffected by mains interference.
- Utilisation of contactors beyond their breaking capacity, as operations are performed off-load.
- Contactors are silent in the latched position.

Applications

- Refineries, power stations, excitation circuits.
- Contactors remaining in the closed state for long periods.

Examples: refineries, power supplies, low voltage distribution.

- Selective opening control.
- No unwanted opening and closing of the main power poles.
- Current carrying at voltages up to 1000 Volts.

Operation of the electromagnet

CR1F block contactors

CR1F magnetic latching contactors are fitted with a double coil with 3 terminals comprising a latching winding and an unlatching winding. The 2 windings have a common point which can necessitate special wiring precautions when the latching supply is separate from the unlatching supply.

The power supplies may be a.c. or d.c. For d.c. operation, the polarities indicated must be complied with.

Operating precautions:

- the 2 windings must not be supplied simultaneously
- a winding must not be supplied continuously
- supply to the coils must be via pulsed contacts.

Manual opening:
if the control voltage is not present, the contactor can be unlatched manually.

Latching is obtained by direct supply of the coil in one direction of current flow.

Unlatching is obtained by a reverse current, adjusted by resistors.

Ref.

High power contactors

References:
pages B10/5, B10/16 to B10/21

Dimensions:
pages B10/66 to B10/69

Life Is On Schneider Electric

Characteristics - Squirrel cage motor

CR1F selection - Squirrel cage motor Direct On Line starter

Continuous or intermittent duty up to 30 operating cycles/hour

Motor (1) 220 V 230 V			380 V 400 V			415 V			440 V			3-pole contactor	3-pole differential thermal overload relay		3 fuses Type	
												(2)	Reference	Setting range	aM	BS-88
P		In	P		In	P		In	P		In	Reference			Rating	
kW	*HP*	A	kW	*HP*	A	kW	*HP*	A	kW	*HP*	A			A	A	A
25	*35*	85	**–**	–	–	**–**	–	–	**–**	–	–	**CR1F150**	**LR9F5367**	60…100	100	125
30	*40*	103	**51**	*70*	98	**55**	*75*	100	**59**	80	97	**CR1F150**	**LR9F5369**	90…150	100	160
33	*45*	113	**55**	*75*	105	**–**	–	–								
–	–	–	**59**	*80*	112	**59**	*80*	105	**63**	*85*	109	**CR1F150**	**LR9F5369**	90…150	125	160
–	–	–	**63**	*85*	117	**63**	*85*	115	**–**	–	–					
37	*50*	126	**75**	*100*	138	**75**	*100*	135	**75**	*100*	125	**CR1F150**	**LR9F5369**	90…150	160	200
40	*54*	134	**–**	–	–	**–**	–	–	**80**	*110*	131					
45	*60*	150	**80**	*110*	147	**80**	*110*	138	**90**	*125*	146	**CR1F185**	**LR9F5369**	90…150	160	200
51	*70*	170	**90**	*125*	170	**90**	*125*	165	**100**	*136*	162	**CR1F185**	**LR9F5371**	132…220	200	250
55	*75*	182	**–**	–	–	**100**	*136*	182	**–**	–	–					
59	*80*	195	**100**	*138*	188	**110**	*150*	200	**110**	*150*	178	**CR1F265**	**LR9F5371**	132…220	250	315
63	*85*	203	**110**	*150*	205	**–**	–	–	**129**	*175*	209					
75	*100*	240	**129**	*175*	242	**129**	*175*	230	**132**	*180*	215	**CR1F265**	**LR9F7375**	200…330	250	315
–	–	–	**132**	*180*	245	**132**	*180*	240	**–**	–	–					
–	–	–	**–**	–	–	**140**	*190*	250	**140**	*190*	227	**CR1F265**	**LR9F7375**	200…330	315	400
80	*110*	260	**140**	*190*	260	**147**	*200*	260	**147**	*200*	236	**CR1F400**	**LR9F7375**	200…330	315	400
–	–	–	**147**	*200*	273	**150**	*205*	270	**150**	*205*	246					
–	–	–	**150**	*205*	280	**160**	*220*	280	**160**	*220*	256					
90	*125*	295	**160**	*220*	300	**–**	–	–	**180**	*245*	289	**CR1F400**	**LR9F7375**	200…330	315	400
–	–	–	**–**	–	–				**185**	*250*	295					
100	*136*	325	**180**	*245*	333	**180**	*245*	320	**200**	*270*	321	**CR1F400**	**LR9F7379**	300…500	400	500
110	*150*	356	**185**	*250*	342	**185**	*250*	325	**220**	*300*	353					
–	–	–	**200**	*270*	370	**200**	*270*	340	**250**	*340*	401	**CR1F400**	**LR9F7379**	300…500	400	500
						220	*300*	385	**–**	–	–					
129	*175*	420	**220**	*300*	408	**–**	–	–	**257**	*350*	412	**CR1F500**	**LR9F7379**	300…500	500	630
132	*180*	425	**250**	*340*	460	**250**	*340*	425	**280**	*380*	450	**CR1F500**	**LR9F7381**	380…630	500	630
140	*190*	450	**–**	–	–	**257**	*350*	450	**–**	–	–					
147	*200*	472	**–**	–	–	**–**	–	–	**295**	*400*	473	**CR1F500**	**LR9F7381**	380…630	500	630
–	–	–	**257**	*350*	475	**280**	*380*	475	**300**	*410*	481	**CR1F630**	**LR9F7381**	380…630	500	630
			–	–	–	**295**	*400*	500	**–**	–	–					
150	*205*	483	**280**	*380*	510	**300**	*410*	510	**315**	*430*	505	**CR1F630**	**LR9F7381**	380…630	630	800
160	*220*	520	**295**	*400*	546	**315**	*430*	535	**335**	*450*	518					
180	*245*	578	**300**	*410*	565	**335**	*450*	550	**355**	*480*	549	**CR1F630**	**LR9F7381**	380…630	630	800
185	*250*	595	**315**	*430*	584	**355**	*480*	580	**375**	*500*	575					
200	*270*	626	**335**	*450*	620	**375**	*500*	610	**400**	*454*	611	**CR1F630**	**LR9F7381**	380…630	800	1000
220	★	700	**355**	★	635	**400**	★	650	**425**	★	650	**CR1BL33**		500…800	800	1000
			375	★	670	**425**	★	690	**445**	★	680					
			400	★	710	**445**	★	730	**450**	★	690					
			–		–	**450**	★	740	**475**	★	730					
250	★	800	**425**	★	760	**475**	★	780	**500**	★	780	**CR1BM33**		500…800	800	1000
257	★	826	**445**	★	790	**500**	★	820	**530**	★	825	**CR1BM33**		630…1000	1000	1250
280	★	900	**450**	★	800	**530**	★	870	**560**	★	870					
295	★	948	**475**	★	850	**560**	★	920	**600**	★	920					
300	★	980	**500**	★	900	**600**	★	978	**630**	★	965					
315	★	990	**530**	★	950											

(1) The ratings are for standard 220/230 V, 380/400 V, 415 or 440 V motors. The overload relays should preferably be set to the motor full-load current shown on the motor rating plate. For other power ratings, select the overload relay with the appropriate range; the associated contactor and fuses must have ratings equal to or immediately greater than In.

(2) Reference to be completed, see page B10/47.

★ There are no standard power ratings for these motors.

References:
pages B10/5, B10/16 to B10/21

Dimensions:
pages B10/66 to B10/69

Characteristics - AC

Rated operational current in AC-3 (θ ≤ 55 °C)											
Contactor size		**CR1F 150**	**CR1 F185**	**CR1F 265**	**CR1F 400**	**CR1 F500**	**CR1F 630**	**CR1 BL**	**CR1 BM**	**CR1 BP**	**CR1 BR**
440 V	**A**	150	185	265	400	500	630	750	1000	1500	1800
500 V	**A**	135	175	245	385	500	540	750	900	1200	1500
660/690 V	**A**	130	140	230	365	435	470	700	800	900	1100
1000 V	**A**	47	73	95	135	270	330	400	400	500	600
Rated operational power (standard motor power ratings)											
220…240 V	**kW**	40	55	75	110	147	200	220	280	425	500
	HP	*54*	*75*	*100*	*150*	*200*	*270*	*300*	*380*	*580*	*680*
380…400 V	**kW**	75	90	132	200	250	335	400	500	750	900
	HP	*100*	*185*	*180*	*270*	*340*	*450*	*545*	*680*	*1000*	*1220*
415 V	**kW**	80	100	140	220	280	375	425	530	800	900
	HP	*110*	*136*	*180*	*300*	*380*	*500*	*580*	*720*	*1100*	*1220*
440 V	**kW**	80	100	140	250	295	400	450	560	800	900
	HP	*110*	*136*	*190*	*340*	*400*	*545*	*610*	*760*	*1100*	*1220*
500 V	**kW**	90	110	160	257	355	400	500	600	750	900
	HP	*125*	*150*	*220*	*350*	*480*	*545*	*680*	*810*	*1000*	*1220*
660/690 V	**kW**	100	110	160	280	335	450	560	670	750	900
	HP	–	–	–	–	–	*610*	*760*	*910*	*1000*	*1220*
1000 V	**kW**	65	100	147	185	335	450	530	530	670	750
	HP	–	*136*	*200*	*250*	–	*610*	*720*	*720*	*910*	*1000*

Maximum operating rate in operating cycles/hour, at rated operational power with an on-load factor = 85 %: 750 for CR1F150 to F265, 500 for CR1F400 to F630 and 120 for CR1 B.

Ref.

High power contactors

References:
pages B10/5, B10/16 to B10/21

Dimensions:
pages B10/66 to B10/69

Life Is On Schneider Electric

Characteristics - Durability (AC)

Use in category AC-3 (Ue ≤ 440 V) (1) (θ ≤ 55 °C)

The current (Ic) in AC-3 is equal to the rated operational current (Ie) drawn by the motor.

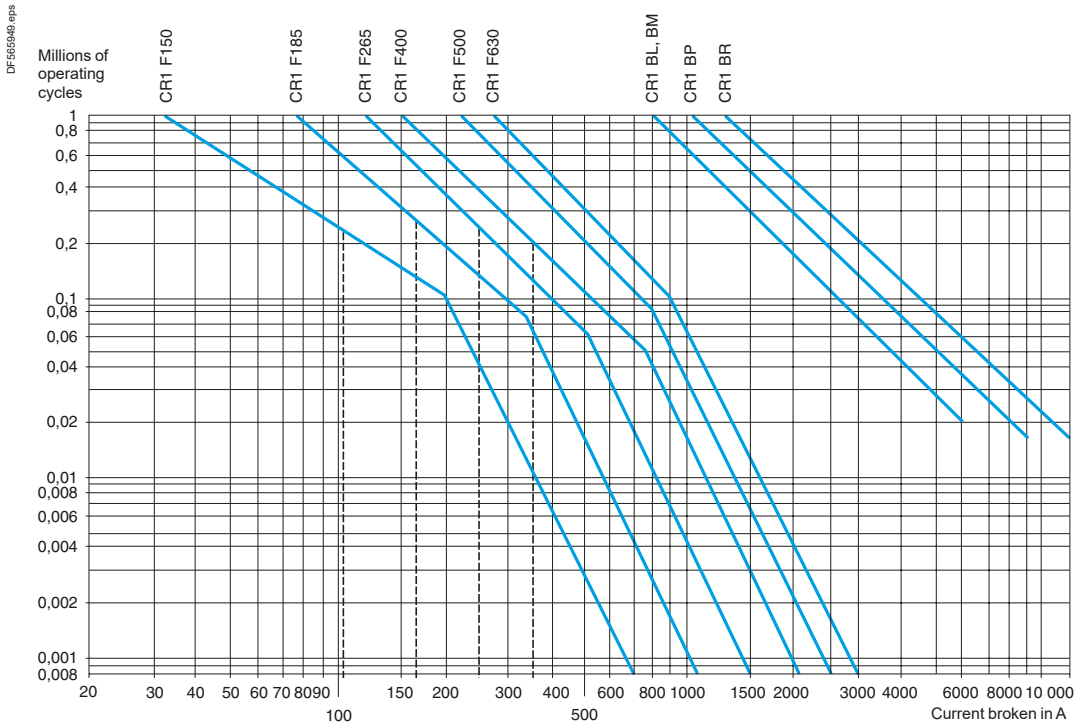

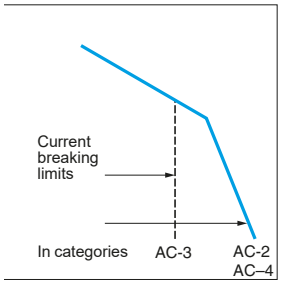

Example:
Asynchronous motor with P = 50 kW, Ue = 380 V, Ie = 100 A, Ic = Ie = 100 A, or asynchronous motor with P = 55 kW, Ue = 415 V, Ie = 100 A, Ic = Ie = 100 A.
600000 operating cycles required.
The above selection curves show the contactor rating needed, CR1F185.

(1) For 660 V, multiply the number of operating cycles by 0.8.

Ref.
High power contactors

References:
pages B10/5, B10/16 to B10/21
Dimensions:
pages B10/66 to B10/69

Characteristics - Durability (AC)

Maximum operational current (on-load factor ≥ 0.95)

Maximum operating rate: 120 operating cycles/hour

Contactor size			CR1 F150	CR1 F185	CR1 F265	CR1 F400	CR1 F500	CR1 F630	CR1 BL	CR1 BM	CR1 BP	CR1 BR
Cable c.s.a.		mm²	120	150	185	–	–	–	–	–	–	–
Number of bars			–	–	–	2	2	2	2	2	3	4
Bar c.s.a.		mm	–	–	–	30 x 5	40 x 5	60 x 5	50 x 5	80 x 5	100 x 5	100 x 5
Operational current in category AC-1 at ambient temperature	≤ 40 °C	A	250	275	350	500	700	1000	800	1250	2000	2750
	≤ 55 °C	A	250	275	300	430	580	850	700	1100	1750	2400
	≤ 70 °C	A	170	180	250	340	500	700	600	900	1500	2000

Increase in operational current by parallel connection of poles

Apply the following coefficients to the above currents; these coefficients take into account an often unbalanced distribution of current between the poles:

- 2 poles in parallel: K = 1.6
- 3 poles in parallel: K = 2.25
- 4 poles in parallel: K = 2.8.

Electrical durability (Ue ≤ 440 V) (1)

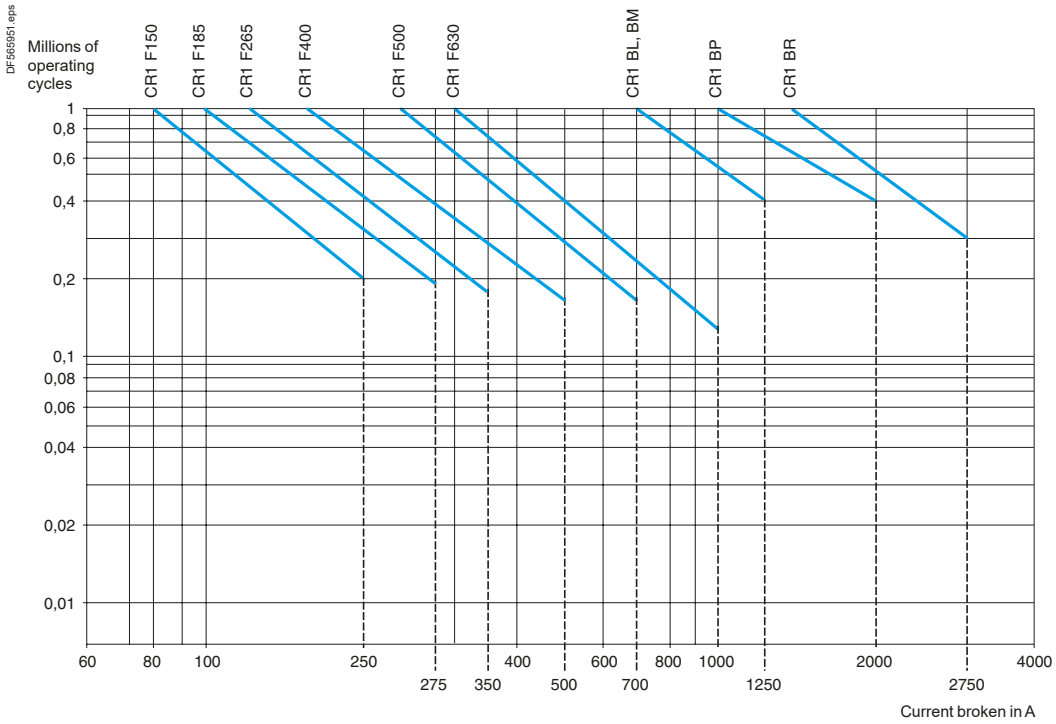

Example:
Ue = 220 V - Ie = 200 A - θ = 40 °C - Ic = Ie = 200 A
600000 operating cycles required.
The above selection curves show the contactor rating needed, CR1F400.

(1) For 660 V, multiply the number of operating cycles by 0.8.

References:
pages B10/5, B10/16 to B10/21
Dimensions:
pages B10/66 to B10/69

3-phase transformer primaries switching

Operating conditions

Maximum ambient temperature: 55 °C.
Maximum operational voltage: 1000 V, 50…60 Hz.

When a transformer is switched on, there is generally an initial current surge which reaches its peak value almost instantaneously and then decreases in a largely exponential manner to quickly reach its steady state value.

The value of this current depends on:
- the characteristics of the magnetic circuit and of the windings (cross sectional area of the core, rated inductance, number of turns, size of the windings, ...)
- the performance of the magnetic laminations used (residual induction and saturation inductance),
- the magnetic state of the circuit and the instantaneous value of the a.c. mains voltage at the moment of switch-on.

The peak current at the moment of switch-on can reach 20 to 40 times the rated current for the various kVA power ratings in the tables below. This value is independent of the “no-load” or “on-load” state of the transformer.

The peak magnetising current of the transformer must be lower than the values given in the tables below.

Contactor selection

Maximum operating rate: 120 operating cycles/hour

Contactor size			CR1 F150	CR1 F185	CR1 F265	CR1 F400	CR1 F500	CR1 F630	CR1 BL	CR1 BM	CR1 BP	CR1 BR
Maximum permissible current peak at switch-on		**A**	1700	2800	3500	5500	6800	9000	18 000	18 000	24 000	30 000
Maximum operational power (1)	220…230 V	**kVA**	25	40	50	75	100	140	230	230	300	380
	380…400 V	**kVA**	50	75	90	130	170	225	400	400	530	660
	415…440 V	**kVA**	55	80	100	140	190	250	450	450	560	700
	500 V	**kVA**	65	95	110	170	225	280	480	480	600	750
	660 V	**kVA**	80	120	140	200	270	315	600	600	800	950
	1000 V	**kVA**	100	150	200	250	375	470	700	700	1000	1200

(1) Maximum operational power corresponding to a current peak at switch-on of 30 In.

Ref.
High power contactors

References:
pages B10/5, B10/16 to B10/21
Dimensions:
pages B10/66 to B10/69

Characteristics

Environment

Contactor type			CR1F150	CR1F185	CR1F265
Rated insulation voltage (Ui)	Conforming to IEC 60158-1, BS 775, 60947-4	**V**	1000	1000	1000
Ambient air temperature around the device	Storage	**°C**	-60…+80		
	For operation at Uc	**°C**	-15…+70		
Maximum operating altitude	Without derating	**m**	3000		
Operating positions	Without derating		±5 ° in relation to normal vertical mounting plane		

Pole characteristics

Number of poles				3 or 4	3 or 4	3 or 4
Rated operational current (Ie) (Ue ≤ 440 V)	In AC-3, θ ≤ 40 °C		**A**	150	185	265
	In AC-1, θ ≤ 40 °C		**A**	250	275	350
	In AC-4, θ ≤ 40 °C		**A**	138	170	245
Rated operational voltage (Ue)	Up to		**V**	1000	1000	1000
Frequency limits (sine wave)	Of the opeational current		**Hz**	25…200	25…200	25…200
Rated making capacity	I rms		**A**	1700	2100	2940
Rated breaking capacity	I rms	220…440 V	**A**	1500	1800	2450
		500 V	**A**	1200	1600	2200
		660/690 V	**A**	1100	1200	1700
		1000 V	**A**	450	600	800
Permissible short time rating from cold state, with no current flowing for previous 60 minutes at θ ≤ 40 °C	For 1 s		**A**	1200	1500	2200
	For 5 s		**A**	1200	1500	2200
	For 10 s		**A**	1200	1500	2200
	For 30 s		**A**	700	920	1230
	For 1 min		**A**	600	740	950
	For 3 min		**A**	450	500	620
	For 10 min		**A**	350	400	480
Short-circuit protection by fuses θ ≤ 440 V	Motor circuit AC-3 (type aM)		**A**	160	200	315
	AC-1 circuit (type gG, BS 88)		**A**	250	315	400
Average impedance per pole	At Ith and 50 Hz		**mΩ**	0.45	0.36	0.32
Power dissipated per pole for the above operational currents	AC-3		**W**	6	12	22
	AC-1		**W**	18	26	39
Connection	Number of conductors			1	1	1
	Cable with lugs		**mm²**	120	150	240
	Cable with connector		**mm²**	120	150	240
	Number of bars			2	2	2
	Bar c.s.a.		**mm**	25 x 3	25 x 3	32 x 4
	Bolt diameter			Ø8	Ø8	Ø10
	Tightening torque		**N.m**	18	18	35

Ref.

High power contactors

References:
pages B10/5, B10/16 to B10/21

Dimensions:
pages B10/66 to B10/69

Characteristics

CR1F400	**CR1F500**	**CR1F630**	**CR1BL**	**CR1BM**	**CR1BP**	**CR1BR**
1000	1000	1000	1000	1000	1000	1000
-60…+80			-60…+80			
-15…+70			-15…+60			
3000			3000			
±5 ° in relation to normal vertical mounting plane			±5 ° in relation to normal vertical mounting plane			
3 or 4	3 or 4	3 or 4	1, 2, 3 or 4	1, 2, 3 or 4	1, 2, 3 or 4	1, 2, 3 or 4
400	500	630	750	1000	1500	1800
500	700	1000	800	1250	2000	2750
370	460	560	700	800	1250	1500
1000	1000	1000	1000	1000	1000	1000
25…200	25…200	25…200	50…60	50…60	50…60	50…60
4500	5000	6740	10 000	10 000	15 000	18 000
4000	5000	6300	10 000	10 000	15 000	18 000
3500	4500	5400	9000	9000	12 000	15 000
3000	3560	4600	8000	8000	9000	11 000
1200	2500	3200	4000	4000	5000	6000
3600	4200	5050	9600	9600	12 000	15 000
3600	4200	5050	9600	9600	12 000	15 000
3600	4200	5050	7000	8000	9600	12 000
2400	3200	4400	4800	5200	6400	8000
1700	2400	3400	3500	3800	5200	6300
1200	1500	2200	2100	2400	3600	4400
1000	1200	1600	1200	1800	2800	3600
400	500	630	800	1200	800 x 2 (1)	1000 x 2 (1)
500	800	1000	800	1200	1000 x 2 (1)	1200 x 2 (1)
0.28	0.18	0.12	0.18	0.18	0.13	0.09
45	45	48	88	180	290	360
70	88	120	115	280	520	680
2	2	–	–	–	–	–
150	240	–	–	–	–	–
–	–	–	–	–	–	–
2	2	2	2	2	3	4
30 x 5	40 x 5	60 x 5	50 x 5	80 x 5	100 x 5	100 x 10
Ø10	Ø10	Ø12	4 x Ø8	4 x Ø10	4 x Ø10	4 x Ø10
35	35	58	21	35	35	35

(1) Paralleling of poles must be carried out only in accordance with the fuse manufacturer's recommendations.

Characteristics

a.c. and d.c. control circuit characteristics

Contactor type					CR1F150	CR1F185	CR1F265
Rated control circuit voltage (Uc)	∿ 50 or 60 Hz			V	48…415		
	∿ 400 Hz			V	48…220		
	⎓			V	48…220		
	⎓ low consumption			V	48…220		
Control voltage limits ∿ and ⎓	Latching				0.85…1.1 Uc		
	Unlatching				0.85…1.1 Uc		
Maximum operating rate at ambient temperature ≤ 40 °C	In operating cycles per hour				120		
Mechanical durability	In millions of operating cycles				1		
Average consumption 50/60 Hz	Latching	1-pole		VA	–	–	–
		2-pole		VA	–	–	–
		3-pole		VA	1100	1600	1650
		4-pole		VA	100	1600	1650
	Unlatching	1-pole		VA	–	–	–
		2-pole		VA	–	–	–
		3-pole		VA	7.3	8	9
		4-pole		VA	7.3	8	9
400 Hz and ⎓	Latching	1-pole		VA	–	–	–
		2-pole		VA	–	–	–
		3-pole		VA	1260	1750	1800
		4-pole		VA	1260	1750	1800
	Unlatching	1-pole		VA	–	–	–
		2-pole		VA	–	–	–
		3-pole		VA	10	11	12
		4-pole		VA	10	11	12
⎓ low consumption	Latching	3/4-pole		W	500	500	500
	Unlatching	3/4-pole		W	15	20	40
Average operating time at Uc (1)	Latching			ms	35…40	35…40	45…50
	Unlatching			ms	50…100	50…100	50…100

(1) The closing time is measured from the moment the closing coil is energised to initial contact of the main poles. The opening time is measured from the moment the opening coil is energised to the moment the main poles separate.

Note: *the arcing time depends on the circuit switched by the main poles. For 3-phase applications the arcing time is usually less than 10 ms. The load is isolated from the supply after a time equal to the sum of the opening time and the arcing time.*

Auxiliary contact characteristics

Type of contacts			LADN for contactors CR1F
Conventional thermal current		A	10
Rated insulation voltage (Ui)	Conforming to IEC 60947-5-1	V	690
Connection	Flexible or solid conductor with or without cable end	mm²	1 x 1 min; 2 x 2.5 max

Operational power of contacts LADN for contactors CR1F

a.c. supply

Electrical durability (valid for up to 3600 operating cycles/hour) on an inductive load such as the coil of an electromagnet: making current (cos φ 0.7) = 10 times the power broken (cos φ 0.4).

	V	48	115	230	400	600
1 million operating cycles	VA	120	280	560	960	1440
Occasional making capacity	VA	2600	7000	13 000	15 000	9000

d.c. supply

Electrical durability (valid for up to 1200 operating cycles/hour) on an inductive load such as the coil of an electromagnet, without economy resistor, the time constant increasing with the load.

V	48	125	250	440
W	90	75	68	61
W	700	400	260	220

Ref.
High power contactors

References:
pages B10/5, B10/16 to B10/21
Dimensions:
pages B10/66 to B10/69

Characteristics

CR1F400	CR1F500	CR1F630	CR1BL	CR1BM	CR1BP	CR1BR
48…415			110…500			
48…220			110…500			
48…220			110…500			
48…220			–			
0.85…1.1 Uc			0.85…1.1 Uc			
0.85…1.1 Uc			0.85…1.1 Uc			
120			120			
1			1			
–	–	–	650	650	650	650
–	–	–	1100	1100	1100	1100
1450	1650	2100	1650	1650	1650	1650
1450	1650	2100	1850	1850	1850	1850
–	–	–	110	110	110	110
–	–	–	125	125	125	125
12	9.5	8	165	165	165	165
12	9.5	8	175	175	175	175
–	–	–	600	600	600	600
–	–	–	1000	1000	1000	1000
1600	1800	2300	1500	1500	1500	1500
1600	1800	2300	1700	1700	1700	1700
–	–	–	100	100	100	100
–	–	–	115	115	115	115
16	13	11	150	150	150	150
16	13	11	160	160	160	160
500	550	620	–	–	–	–
70	60	45	–	–	–	–
40…75	40…80	40…80	100…150	100…150	100…150	100…150
50…100	50…100	50…100	20…40	20…40	20…40	20…40

(1) The closing time is measured from the moment the closing coil is energised to initial contact of the main poles. The opening time is measured from the moment the opening coil is energised to the moment the main poles separate.

***Note:** the arcing time depends on the circuit switched by the main poles. For 3-phase applications the arcing time is usually less than 10 ms. The load is isolated from the supply after a time equal to the sum of the opening time and the arcing time.*

LADN for contactors CR1F	ZC4GM for contactors CR1B
10	20
690	660
1 x 1 min; 2 x 2.5 max	2 min; 4 max

Operational power of contacts ZC4GM for contactors CR1 B

a.c. supply

Electrical durability (valid for up to 2400 operating cycles/hour) on an inductive load such as the coil of an electromagnet: making current (cos φ 0.7) = 10 times the power broken (cos φ 0.4).

	V	110 127	220	380	415 440	500
1 million operating cycles	VA	2000	4000	4000	4000	3500
Occasional making capacity	VA	14000	23000	35000	45000	35000

d.c. supply

Electrical durability (valid for up to 1200 operating cycles/hour) on an inductive load such as the coil of an electromagnet, without economy resistor, the time constant increasing with the load.

V	110	120	440	500
W	250	250	230	200
W	1600	800	400	360

Ref.
High power contactors

References:
pages B10/5, B10/16 to B10/21
Dimensions:
pages B10/66 to B10/69

Dimensions

CR1F150 to F500

Common side view

CR1F150, F185, F265

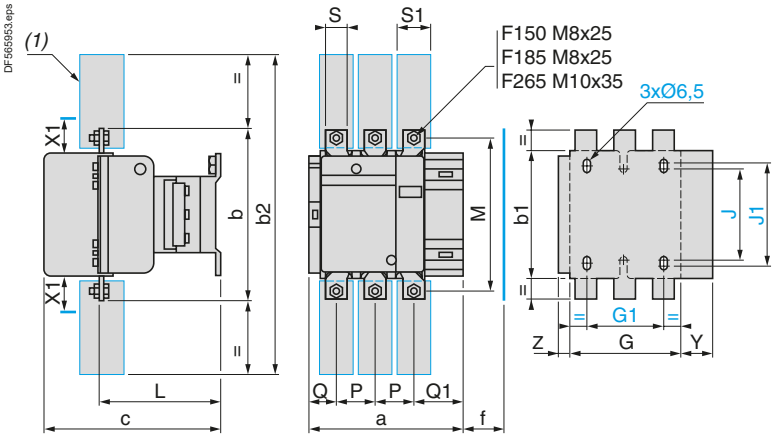

CR1F400, F500

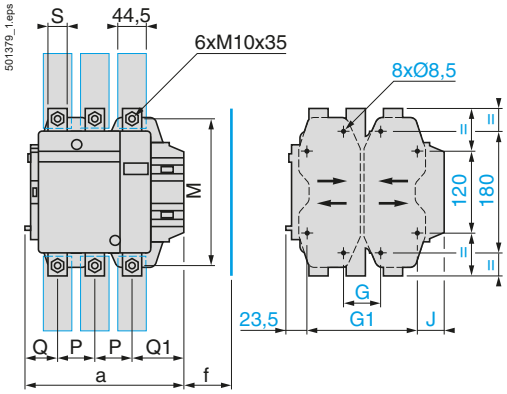

CR1	F150		F185		F265	
	3P	4P	3P	4P	3P	4P
a	163.5	201.5	168.5	208.5	201.5	244.5
b	170	170	174	174	203	203
b1	137	137	137	137	145	145
b2	301	301	305	305	370	370
c	171	171	181	181	213	213
f	131	131	130	130	147	147
G	106	143	111	151	142	190
G1	80	80	80	80	96	96
J	106	106	106	106	106	106
J1	120	120	120	120	120	120
L	107	107	113.5	113.5	141	141
M	150	150	154	154	178	178
P	40	40	40	40	48	48
Q	26	26	29	29	39	34
Q1	57.5	55.5	59.5	59.5	66.5	66.5
S	20	20	20	20	25	25
S1	27	27	34	34	38	38
Y	44	44	38.5	30.5	30.5	21.5
Z	13.5	13.5	13.5	13.5	15.5	15.5

f = minimum distance required for coil removal.

X1: Minimum electrical clearance according to operational voltage and breaking capacity.

Voltage in V	200…500	660…1000
CR1F150	10	15
CR1F185	10	15
CR1F265	10	15

CR1	F400		F500	
	3P	4P	3P	4P
a	213	261	233	288
G min.	66	66	66	66
b	206	206	238	238
b2	375	375	400	400
c	219	219	232	232
f	146	146	150	150
G supplied	80	80	80	140
G max.	102	150	120	175
G1 supplied	170	170	170	230
G1 min.	156	156	156	156
G1 max.	192	240	210	265
J	12	60	32	27
L	145	145	146	146
M	181	181	208	208
P	48	48	55	55
Q	43	43	47	47
Q1	74	74	77	77
S	25	25	30	30

f = minimum distance required for coil removal.

X1: Minimum electrical clearance according to operational voltage and breaking capacity.

Voltage in V	200…500	660…1000
CR1F400	15	20
CR1F500	15	20

(1) Power terminal protection shroud (see page B10/10).

CR1F630

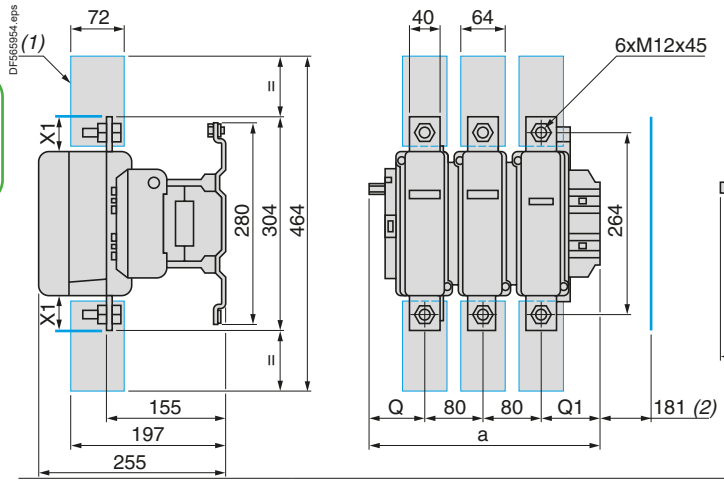

CR1F630	3P	4P
a	309	389
G supplied	180	240
G min.	100	150
G max.	195	275
J1	61	81
Q	60	60
Q1	89	89

X1: Min. electrical clearance according to operational voltage and breaking capacity.

Voltage in V	X1
200…500	20
690…1000	30

(1) Power terminal protection shroud.
(2) Minimum distance required for coil removal.

References:
pages B10/5, B10/16 to B10/21

Characteristics:
pages B10/56 to B10/65

Life Is On Schneider Electric

Mounting

CR1F150…F265

Panel mounted

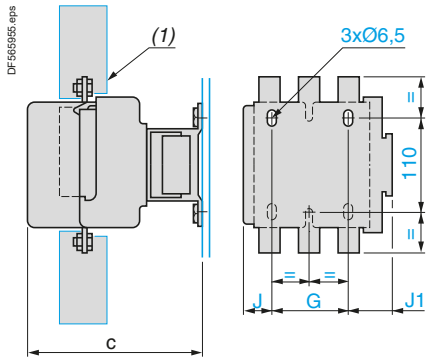

On pre-slotted mounting plate AM1PA, PB, PC

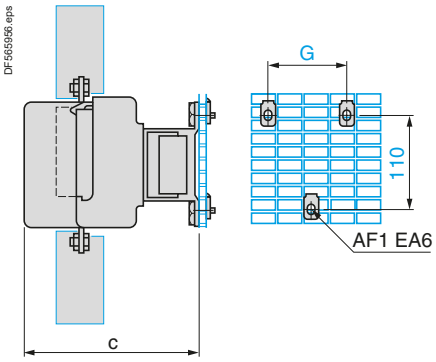

On rails DZ5MB on 120 mm centres

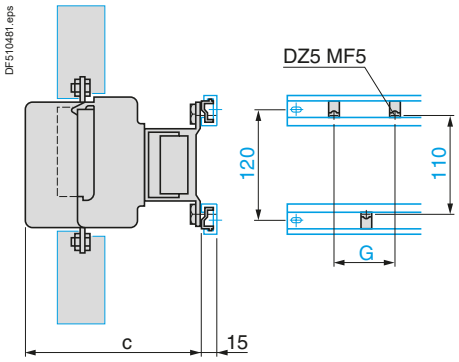

CR1		F150	F185	F265
c	3P	171	181	213
	4P	171	181	213
G	3P	80	80	96
	4P	80	80	96
J	3P	26.5	29	44.5
	4P	45	49	68.5
J1	3P	57	59.5	61.5
	4P	75.5	79.5	85.5

CR1		F150	F185	F265
c	3P	171	181	213
	4P	171	181	213
G	3P	80	80	96
	4P	80	80	96

CR1		F150	F185	F265
c	3P	171	181	213
	4P	171	181	213
G	3P	80	80	96
	4P	80	80	96

(1) Power terminal protection shroud (see page B10/10).

CR1F150…F650

On 2 notched uprights AM1EC●●●

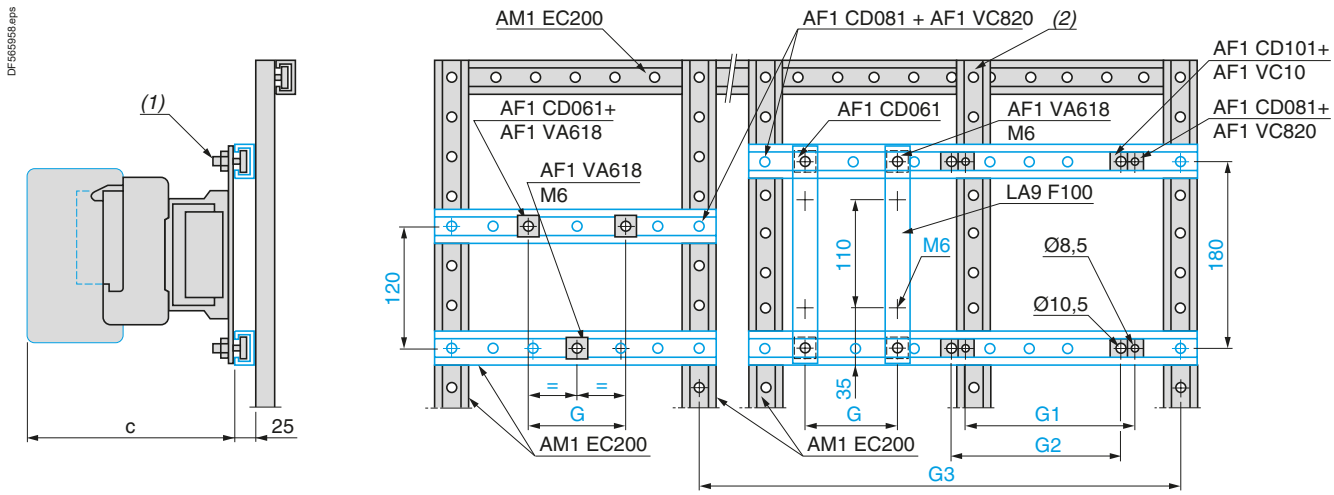

CR1		F150	F185	F265	F400	F500	F630
c	3P	171	181	213	213	226	250
	4P	171	181	213	213	226	250
G (M6)	3P	80	80	96	–	–	–
	4P	80	80	96	–	–	–
G1 (Ø8,5)	3P	–	–	–	80	80	–
	4P	–	–	–	80	140	–
G2 (Ø10,5)	3P	–	–	–	–	–	180
	4P	–	–	–	–	–	240

(1) AF1CD●●● or AF1VA●●●.
(2) This AM1EC200 upright is required when G2 or G3 is greater than 700 mm (please consult your Regional Sales Office).

References:
pages B10/5, B10/16 to B10/21
Characteristics:
pages B10/56 to B10/65

Mounting

Reversing contactors 2 x CR1F150…F265

Horizontally mounted

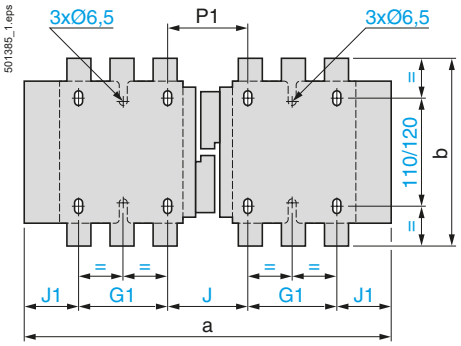

2 x **CR1**		**F150**	**F185**	**F265**
a	3P	345	357	425
	4P	422	437	521
b	3P	170	174	203
	4P	170	174	203
G1	3P	80	80	96
	4P	80	80	96
J	3P	71	78	109
	4P	111	118	157
J1	3P	57	59.5	61.5
	4P	75.5	79.5	85.5
P1	3P	71	78	100
	4P	71	78	100

Reversing contactors 2 x CR1F400…F630

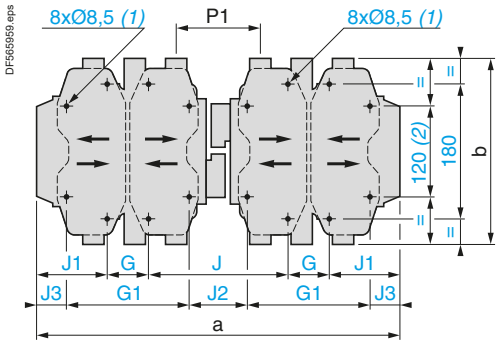

2 x **CR1**		**F400**	**F500**	**F630**
a	3P	446	485	636
	4P	542	595	796
b	3P	206	238	304
	4P	206	238	304
G	3P	80	80	180
	4P	80	140	240
G1	3P	170	170	–
	4P	170	230	–
J	3P	157	156	139
	4P	157	156	139
J1	3P	64.5	84.5	68.5
	4P	112.5	79.5	68.5
J2	3P	67	66	–
	4P	67	66	–
J3	3P	19.5	39.5	–
	4P	67.5	34.5	–
P1	3P	107	112	137
	4P	107	112	137

(1) Except F630: 4 x Ø 10.5.
(2) Except F630: 180.

Ref.
High power contactors

Reversing contactors

Vertically mounted with mechanical interlock **LA9F●●●**.
2 contactors **CR1F** of identical or different ratings (CR1F150…F630), see page B10/49.

Assembly A

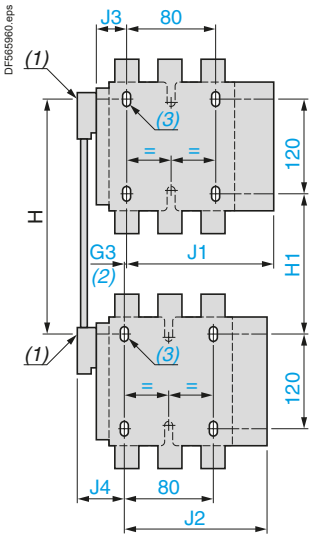

Assembly B

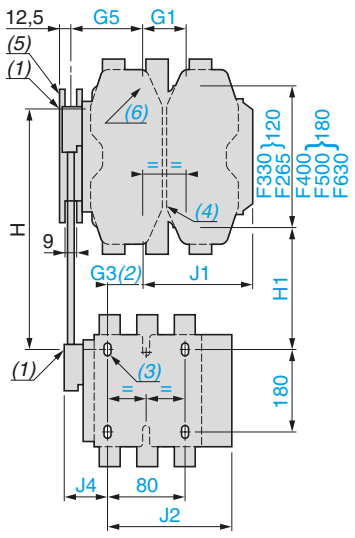

Assembly C

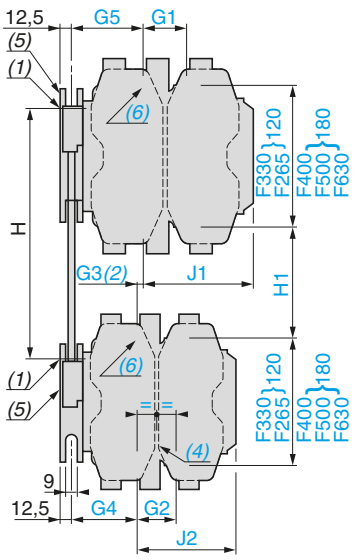

(1) Mechanical interlock shaft.
(2) For assembly of contactors of different ratings only.
(3) 3 x Ø6.5 mm for CR1F150…F265.
(4) 3 x Ø6.5 mm for CR1F265.
(5) Mechanical interlock guide bracket.
(6) 4 x Ø8.5 mm for CR1F400, F500 or 4 x Ø10.5 mm.

Assembly type LA9F		A			B								C								
		F4F	G4F	G4G	H4F	J4F	K4F	L4F	H4G	J4G	K4G	L4G	H4H	J4H	K4H	L4H	J4J	K4J	L4J	K4K	L4K	L4L
G1	3P	–	–	–	96	80	80	180	96	80	80	180	96	80	80	180	80	80	180	80	180	180
	4P	–	–	–	96	80	140	240	96	80	140	240	96	80	140	240	80	140	240	140	240	240
G2	3P	–	–	–	–	–	–	–	–	–	–	–	96	96	96	96	80	80	80	80	80	180
	4P	–	–	–	–	–	–	–	–	–	–	–	96	96	96	96	80	80	80	140	140	240
G3	3P	0	3	0	21	45	45	35	19	42	42	33	0	23	23	14	0	0	9 (7)	0	9 (7)	0
	4P	0	4	0	27	26	26	17	23	22	22	13	0	0	0	9 (7)	0	0	9 (7)	0	9 (7)	0
G4	3P	–	–	–	–	–	–	–	–	–	–	–	60	60	60	60	83	83	83	83	83	74
	4P	–	–	–	–	–	–	–	–	–	–	–	83	83	83	83	83	83	83	83	83	74
G5	3P	–	–	–	60	83	83	74	60	83	83	74	60	83	83	74	83	83	74	83	74	74
	4P	–	–	–	83	83	83	74	83	83	83	74	83	83	83	74	83	83	74	83	74	74
H	min.	200	210	220	240	250	270	310	250	250	270	310	250	260	280	330	260	280	325	300	345	380
	max.	310	300	310	380	380	380	380	380	380	380	380	380	380	380	380	380	380	380	380	380	380
H1	min.	80	90	100	110	80	100	140	120	90	110	150	130	110	130	170	60	100	140	120	160	200
	max.	190	180	190	250	210	210	210	250	220	220	220	260	230	230	220	200	200	195	200	195	200
J1	3P	133	134	134	149.5	137	157	241	149.5	137	157	241	149.5	137	157	24	137	157	241	157	244	241
	4P	145	146	146	164.5	185	212	321	164.5	185	212	321	164.5	185	212	321	185	212	321	212	321	321
J2	3P	133	133	134	183	133	183	133	134	134	134	134	142.5	149.5	149.5	149.5	137	137	137	157	157	241
	4P	145	145	146	145	145	145	145	146	146	146	146	164.5	164.5	164.5	164.5	185	185	185	212	212	312
J3	3P	48.5	53	53	–	–	–	–	–	–	–	–	–	–	–	–	–	–	–	–	–	–
	4P	67	73	73	–	–	–	–	–	–	–	–	–	–	–	–	–	–	–	–	–	–
J4	3P	48.5	54	53	48.5	48.5	48.5	48.5	53	53	53	53	–	–	–	–	–	–	–	–	–	–
	4P	67	69	73	67	67	67	67	73	73	73	73	–	–	–	–	–	–	–	–	–	–

(7) In this case, G4 is greater than G5.

References:
pages B10/5, B10/16 to B10/21
Characteristics:
pages B10/56 to B10/65

Characteristics

Selection

Contactor size			LC1V160	LC1V320	LC1V610
For utilisation category AC-3					
Maximum operational current in AC-3		**A**	160	320	610
Rated operational power P (standard power ratings of motors)	230 V	**kW**	45	90	160
	400 V	**kW**	75	160	300
	525 V	**kW**	110	220	400
	690 V	**kW**	150	280	560
	1000 V	**kW**	200	400	800
	1500 V	**kW**	280	600	930
For 3-phase motors conforming to CSA standards					
Rated operational power P (standard power ratings of 3-phase CSA motors)	200 V	**hp**	50	100	150
	240 V	**hp**	60	125	200
	380 V	**hp**	100	200	300
	480 V	**hp**	125	250	400
	600 V	**hp**	150	300	500
	800 V	**hp**	200	400	700
	1000 V	**hp**	250	500	1000
	1500 V	**hp**	400	800	1300
For switching 3-phase capacitors					
Rated operational power P	240 V	**kVAR**	47	94	176
	480 V	**kVAR**	95	190	356
	600 V	**kVAR**	100	200	400
	1500 V	**kVAR**	250	500	1000
For switching the primaries of 3-phase transformers (LV/LV)					
Rated operational power P	208 V	**kVA**	20	41	81
	240 V	**kVA**	23	47	94
	480 V	**kVA**	47	94	188
	600 V	**kVA**	59	117	234

Environment characteristics

Contactor type				LC1V160	LC1V320	LC1V610
Shock resistance(1/2 sine wave = 11 ms) Conforming to IEC/EN 60068-2-27		Contacts closed		10 gn	10 gn	10 gn
		Contacts open		10 gn	10 gn	10 gn
Vibration resistance Conforming to IEC/EN 60068-2-6		10…500 Hz		2 gn	2 gn	2 gn
Operating altitude	Above sea level	Maximum	**m**	3600	3600	3600
	Below sea level	Minimum	**m**	2500	4500	4500
Ambient air temperature around the device		Storage	**°C**	-40…+80	-40…+80	-40…+80
		Operation 0.8… 1.1 Uc	**°C**	-5…+55	-5…+55	-5…+55
		Permissible for operation at Uc	**°C**	-10…+75	-10…+75	-10…+75
Degree of protection		Conforming to IEC 60529		IP 00	IP 00	IP 00
Operating position				Any	Any	Any
Cabling		Cable c.s.a.	**mm²**	70	185	2 x 185
		Key for hex. screws	**mm**	Allen 4	20	20
		Tightening torque	**N.m**	14	39	39

Control circuit characteristics

Rated insulation voltage (Ui)	To earth	**V**	2000	2000	2000
Consumption	Inrush	**VA**	300	600	1700
	Sealed	**VA**	30	20	28
Permissible control circuit voltage			0.8…1.1 Uc	0.8…1.1 Uc	0.8…1.1 Uc
Closing time (1)		**ms**	18...22	24...32	24...32
Opening time (1)		**ms**	95...115	95...115	95...115

(1) The closing time "C" is measured from the moment the coil supply is switched on to initial contact of the main poles. The opening time "O" is measured from the moment the coil supply is switched off to the moment the main poles separate.

References: page B10/22
Dimensions: pages B10/72 and B10/73
Schemes: pages B10/72 to B10/75

Characteristics

Main pole characteristics

Contactor type			LC1V160	LC1V320	LC1V610
Rated insulation voltage (Ui)		**V**	1500	1500	1500
Rated impulse withstand voltage (Uimp)		**kV**	8	8	8
Conforming to standards			EN 60947-4-1 - IEC 60947-4-1		
Conventional rated thermal current (Ith)		**A**	160	320	630
Rated operational current (Ie)	θ ≤ 40 °C AC-1	**A**	160	320	630
	θ ≤ 55 °C AC-3	**A**	160	320	610
	θ ≤ 55 °C AC-4	**A**	130	270	540
Electrical durability in millions of operating cycles (400 V at I max)	AC-1		1.2	1	1
	AC-3		1.6	1.5	1.5
	AC-4		0.18	0.15	0.12
Mechanical durability	In millions of operating cycles		5	2.5	2
Maximum operating rate in operating cycles per hour	Mechanical		1200	1200	1200
	AC-1		900	900	900
	AC-3		900	900	900
	AC-4		450	450	450
Maximum making capacity (Irms)	Ue = 1500 V To IEC 60947	**A**	1900	3800	7300
Maximum breaking capacity (Irms)	Ue = 1500 V To IEC 60947	**A**	1600	3200	6100
Maximum permissible current	For 1 s	**A**	2400	4500	9000
	For 2 s	**A**	2000	3750	7580
	For 10 s	**A**	1600	3200	6100
	For 30 s	**A**	960	1920	3600
Short-circuit protection at Ie in cat. AC-3 max.	aM fuse	**A**	160	400	630

Auxiliary contact characteristics

Rated insulation voltage (Ui)		**V**	690
Conventional rated thermal current (Ith)		**A**	10
Rated operational current (Ie)	AC-15, 230 V	**A**	0.78
	AC-15, 400 V	**A**	0.45
	AC-15, 500 V	**A**	0.35
	DC-13, 24 V	**A**	1.1
	DC-13, 110 V	**A**	0.24
	DC-13, 220 V	**A**	0.12
Cabling	Cable c.s.a.	**mm²**	2.5
Short-circuit protection	gG fuse	**A**	10
Operating time (1) (at 100 % of Uc)	"C"	**ms**	±5
	"O"	**ms**	±5

(1) Operating time in relation to the main contacts.

Ref.
High power contactors

Dimensions, mounting

LC1V160

500311.eps

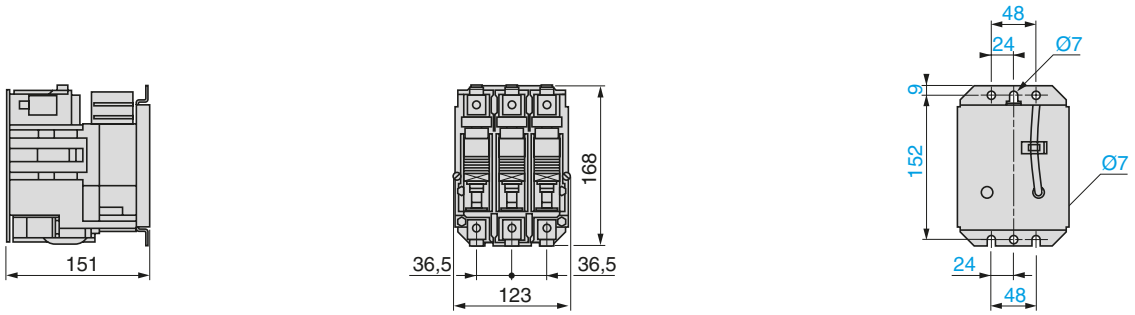

LC1V320

500312.eps

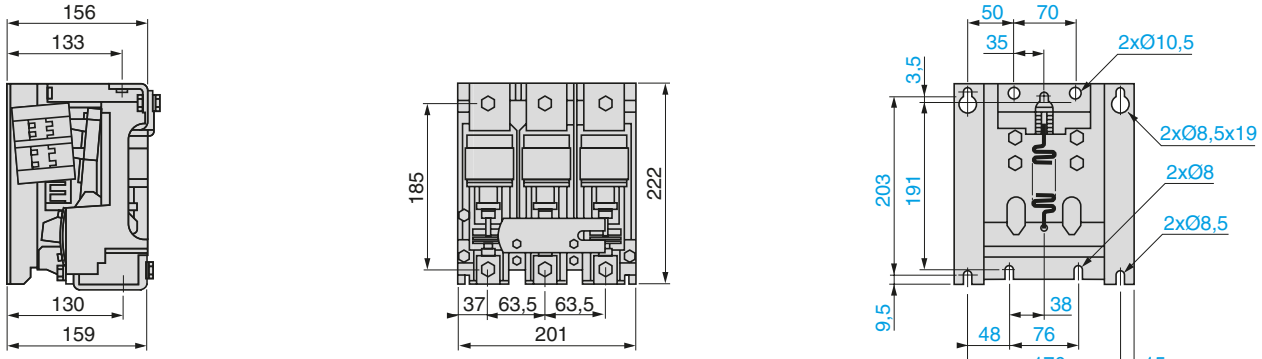

LC1V610

500313.eps

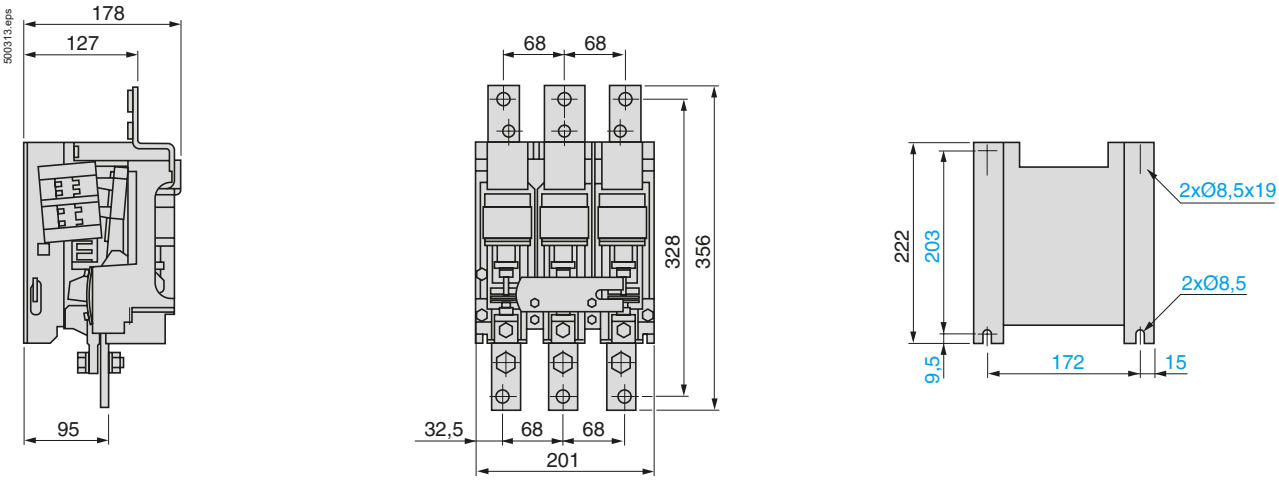

Schemes

LC1V160

500314.eps

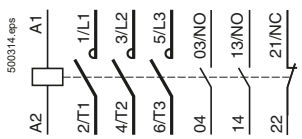

LC1V320, V610

500315.eps

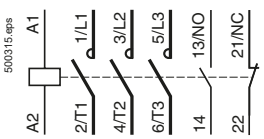

Auxiliary contact blocks

LA1VN11 1 N/O & 1 N/C

500316.eps

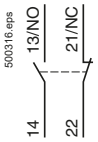

LA1VN20 2 N/O

500318.eps

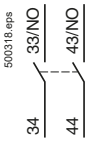

LA1VN11X 1 N/O

500521.eps

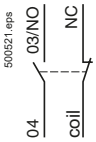

References:
page B10/22

Dimensions, mounting

LC2V320

DF536047.eps

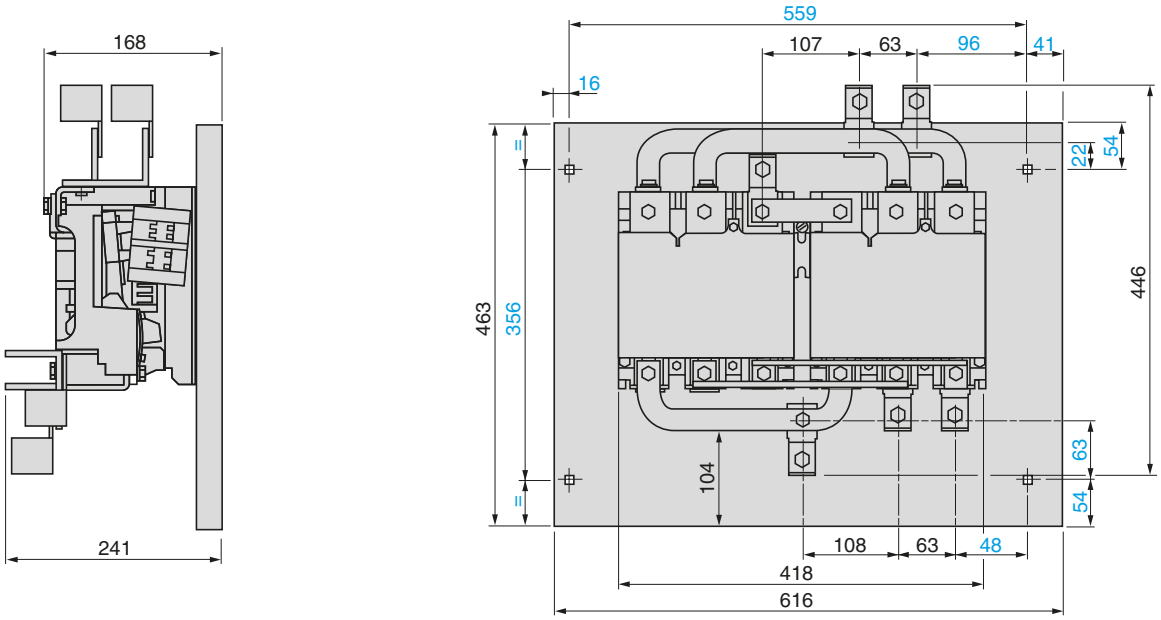

LC2V610

562322.eps

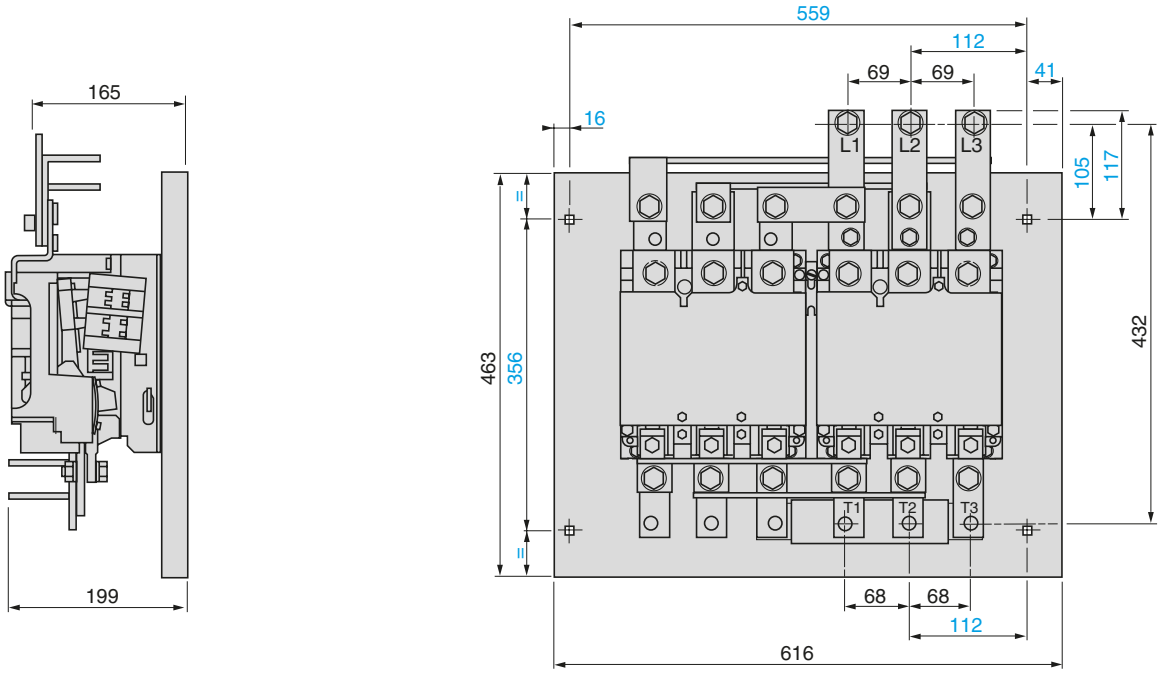

Ref.

High power contactors

Schemes

LC2V320

562324.eps

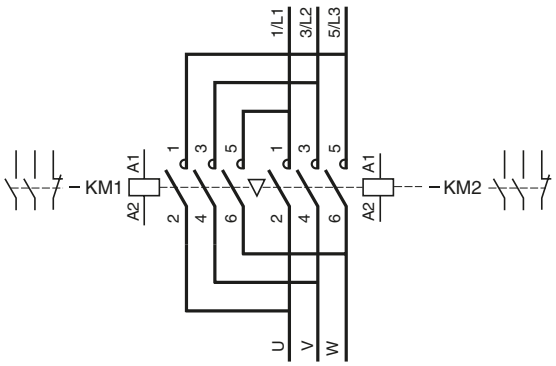

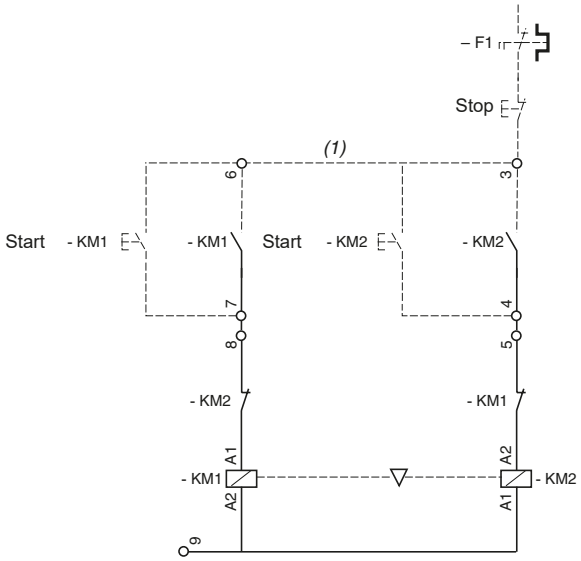

(1) Dotted line indicates wiring to be installed by the customer.

High power contactors

Schemes

LC2V610

562325.eps

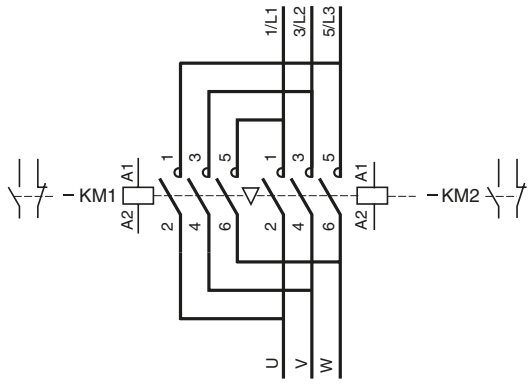

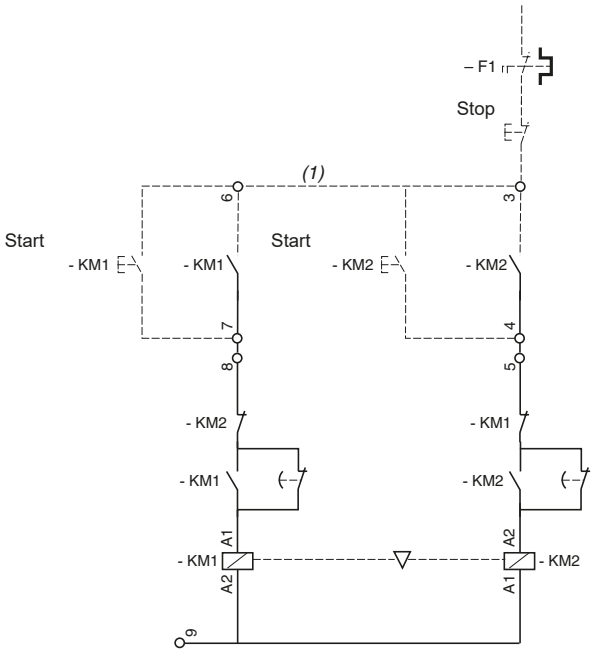

(1) Dotted line indicates wiring to be installed by the customer.

Ref.
High power contactors

TeSys Protect
LRK, Deca, Giga Overload relays

Chapter B11

Thermal overload relays - For use with TeSys K contactors

Type of product	Range		Pages
Adjustable thermal overload relays For motors TeSys LRK	From 0.16 to 16 A		B11/2
Adjustable thermal overload relays For unbalanced loads TeSys LRK	From 0.8 to 16 A		B11/3

Thermal overload relays Class 10 A - For use with TeSys Deca contactors

TeSys Deca adjustable thermal overload relays For motors	From 0.16 to 140 A	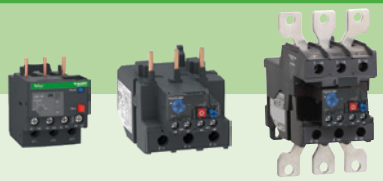	B11/4
TeSys Deca adjustable thermal overload relays For unbalanced loads	From 0.16 to 140 A		B11/4

Thermal overload relays Class 20 - For use with TeSys Deca contactors

TeSys Deca adjustable thermal overload relays For motors	From 0.63 to 80 A		B11/6
TeSys Deca adjustable thermal overload relays For unbalanced loads	From 0.63 to 32 A		B11/6

Electronic thermal overload relays - For use with TeSys Deca contactors

TeSys Deca adjustable electronic overload relay, Multi-class, multi-scale	From 0.1 to 150 A		B11/10

Electronic overload relays - For use with TeSys Giga contactors

TeSys LR9G electronic overload relays To protect against overload, phase imbalance, phase loss and ground fault	From 28 to 630 A		B11/11

Single pole magnetic over current relays

TeSys RM1 Latching or non latching overload relays	From 1.15 to 630 A		B11/15

Thermistor-type protection units – For use detection of motor overheating

TeSys LT3 Protection units and PTC probes, with or without fault memory	From 90 to 170 °C		B11/17

Electronic over current relays - For machine protection

Predefined or adjustable starting times, Manual reset	From 1.5 to 34 A		B11/19
Automatic, electric or manual reset	From 0.5 to 50 A		B11/19

Technical Data for Designers B11/21

Product references

PB123793.tif



LR2K0307

3-pole thermal overload relays for TeSys K contactors

These overload relays are designed for the protection of motors. They are compensated and phase failure sensitive. Resetting can either be manual or automatic.
Direct mounting: under the contactor for versions with screw clamp terminals only; pre-wired terminals, see pages B11/28 and B11/30.
Separate mounting: using terminal block LA7K0064 (see below).
On the front face of the overload relay:
- selection of reset mode: Manual (marked H) or Automatic (marked A),
- red pushbutton: Trip Test function,
- blue pushbutton: Stop and manual Reset,
- yellow trip flag indicator: overload relay tripped.

Protection by magnetic circuit breaker GV2LE, see pages coordination tables chapter A6.

Class 10 A (the standard specifies a tripping time of between 2 and 10 seconds at 7.2 In)

Relay setting range	Fuses to be used with selected relay Maximum rating Type			Reference
	aM	gG	BS88	
A	A	A	A	
0.11…0.16	0.25	0.5	–	**LR2K0301**
0.16…0.23	0.25	0.5	–	**LR2K0302**
0.23…0.36	0.5	1	–	**LR2K0303**
0.36…0.54	1	1.6	–	**LR2K0304**
0.54…0.8	1	2	–	**LR2K0305**
0.8…1.2	2	4	6	**LR2K0306**
1.2…1.8	2	6	6	**LR2K0307**
1.8…2.6	4	8	10	**LR2K0308**
2.6…3.7	4	10	16	**LR2K0310**
3.7…5.5	6	16	16	**LR2K0312**
5.5…8	8	20	20	**LR2K0314**
8…11.5	10	25	20	**LR2K0316**
10…14	16	32	25	**LR2K0321**
12…16	20	40	32	**LR2K0322**

Overload relays for unbalanced loads

Class 10 A: to order, replace the prefix **LR2** by **LR7** in the references selected from above (only applicable to overload relays **LR2K0305** to **LR2K0322**).
Example: **LR7K0308**.

Characteristics: pages B11/28 and B11/29
Dimensions: page B11/30
Schemes: page B11/30

Product references

PB121488.eps



LA7K0064

Accessory for TeSys LRK Thermal overload relay		
Description	**Type of connection**	**Reference**
Terminal block for separate clip-on mounting of the overload relay on 35 mm ⎓ rail	Screw clamp	**LA7K0064**

Product references

3-pole differential thermal overload relays for Deca contactors - Class 10A

- for use with fuses or magnetic circuit breakers ref. GV2L and GV3L
- compensated relays with manual or automatic reset
- with relay trip indicator
- for a.c. or d.c.

Relay setting range (A)	Fuses to be used with selected relay aM (A)	gG (A)	BS88 (A)	For use with contactor LC1	Reference	Weight kg
Class 10 A (1) for connection by screw clamp terminals or connectors						
0.10…0.16	0.25	2	–	D09…D38	**LRD01**	0.124
0.16…0.25	0.5	2	–	D09…D38	**LRD02**	0.124
0.25…0.40	1	2	–	D09…D38	**LRD03**	0.124
0.40…0.63	1	2	–	D09…D38	**LRD04**	0.124
0.63…1	2	4	–	D09…D38	**LRD05**	0.124
1…1.6	2	4	6	D09…D38	**LRD06**	0.124
1.6…2.5	4	6	10	D09…D38	**LRD07**	0.124
2.5…4	6	10	16	D09…D38	**LRD08**	0.124
4…6	8	16	16	D09…D38	**LRD10**	0.124
5.5…8	12	20	20	D09…D38	**LRD12**	0.124
7…10	12	20	20	D09…D38	**LRD14**	0.124
9…13	16	25	25	D12…D38	**LRD16**	0.124
12…18	20	35	32	D18…D38	**LRD21**	0.124
16…24	25	50	50	D25…D38	**LRD22**	0.124
23…32	40	63	63	D25…D38	**LRD32**	0.124
30…38	40	80	80	D32 and D38	**LRD35**	0.124
Class 10 A (1) for connection by EverLink® BTR screw connectors (2)						
9…13	16	25	25	D40A…D65A	**LRD313**	0.375
12…18	20	32	35	D40A…D65A	**LRD318**	0.375
17…25	25	50	50	D40A…D65A	**LRD325**	0.375
23…32	40	63	63	D40A…D65A	**LRD332**	0.375
30…40	40	80	80	D40A…D65A	**LRD340**	0.375
37…50	63	100	100	D40A…D65A	**LRD350**	0.375
48…65	63	100	100	D50A and D65A	**LRD365**	0.375
62...80	80	125	125	D80A	**LRD380**	0.375
Class 10 A (1) for connection by screw clamp terminals or connectors						
17…25	25	50	50	D80 and D95	**LRD3322**	0.510
23…32	40	63	63	D80 and D95	**LRD3353**	0.510
30…40	40	100	80	D80 and D95	**LRD3355**	0.510
37…50	63	100	100	D80 and D95	**LRD3357**	0.510
48…65	63	100	100	D80 and D95	**LRD3359**	0.510
55…70	80	125	125	D80 and D95	**LRD3361**	0.510
63…80	80	125	125	D80 and D95	**LRD3363**	0.510
80…104	100	160	160	D80 and D95	**LRD3365**	0.510
80…104	125	200	160	D115 and D150	**LRD4365**	0.900
95…120	125	200	200	D115 and D150	**LRD4367**	0.900
110…140	160	250	200	D150	**LRD4369**	0.900
80…104	100	160	160	(3)	**LRD33656**	1.000
95…120	125	200	200	(3)	**LRD33676**	1.000
110…140	160	250	200	(3)	**LRD33696**	1.000

PB121694.tif

LRD●●

PB123837.tif

LRD33●●

PB123839.eps

LRD43●●

Class 10 A (1) for connection by lugs

Select the appropriate overload relay with screw clamp terminals or connectors from the table above and add one of the following suffixes:

- figure **6** for relays LRD01 to LRD35 and relays LRD313 to LRD380.
- **A66** for relays LRD3322 to LRD3363.

Relays LRD43●● are suitable, as standard, for use with lug-clamps.

Thermal overload relays for use with unbalanced loads

Class 10 A (1) for connection by screw clamp terminals or lugs

In the references selected above, change the prefix **LRD** (except **LRD43●●**) to **LR3D**.
Example: **LRD02** becomes **LR3D02**.
Example with **Ever**Link®connectors: **LRD340** becomes **LR3D340**.
Example with lugs: **LRD3806** becomes **LR3D3806.**

PB123840.eps

LRD3●●6

(1) Standard IEC 60947-4-1 specifies a tripping time for 7.2 times the setting current I_R: class 10 A: between 2 and 10 seconds.
*(2) BTR screws: hexagon socket head. In accordance with local electrical wiring regulations, a size 4 insulated Allen key must be used (reference **LADALLEN4**, see page B8/42).*
(3) Independent mounting of the contactor.

Please check the availability of your variant in the index page B11/20. The SEARCH function of your viewer can be used.

Overload relays

Characteristics: pages B11/31 to B11/34
Dimensions: pages B11/35 to B11/37
Schemes: page B11/37

Product references

PB121704.eps



LRD●●3

3-pole differential thermal overload relays for Deca contactors - Class 10 A

- for use with fuses or magnetic circuit breakers ref. GV2L and GV3L
- compensated relays with manual or automatic reset
- with relay trip indicator
- for a.c. or d.c.

Relay setting range (A)	Fuses to be used with selected relay			For use with contactor LC1	Reference
	aM (A)	gG (A)	BS88 (A)		
Classes 10 A (1) for connection by spring terminals (only for direct mounting beneath the contactor)					
1…1.6	2	4	6	D09…D38	**LRD063**
1.6…2.5	4	6	10	D09…D38	**LRD073**
2.5…4	6	10	16	D09…D38	**LRD083**
4…6	8	16	16	D09…D38	**LRD103**
5.5…8	12	20	20	D09…D38	**LRD123**
7…10	12	20	20	D09…D38	**LRD143**
9…13	16	25	25	D12…D38	**LRD163**
12…18	20	35	32	D18…D38	**LRD213**
16…24	25	50	50	D25…D38	**LRD223**
Class 10 A with connection by EverLink® BTR screw connectors (2) and control by spring terminals					
23…32	40	63	63	D40A…D65A	**LRD3323**
37…50	63	100	100	D40A…D65A	**LRD3503**
48…65	63	100	100	D50A and D65A	**LRD3653**
62...80	80	125	125	D80A	**LRD3803**

Thermal overload relays for use with unbalanced loads

Classes 10 A (1) for connection by BTR screw connectors (2) and control by spring terminals

In the references selected above, replace **LRD3** with **LR3D3**.
Example: **LRD3803** becomes **LR3D3803**.

Thermal overload relays for use on 1000 V supplies

Classes 10 A (1) for connection by screw clamp terminals

For relays LRD06 to LRD35 only, for an operating voltage of 1000 V, and only for independent mounting, the reference becomes **LRD33●●A66**.
Order an **LA7D3064** terminal block separately, see page B11/9.

Standard relay	Relay for 1000 V network
LRD32	LRD3353A66

(1) Standard IEC 60947-4-1 specifies a tripping time for 7.2 times the setting current I_R: class 10 A: between 2 and 10 seconds.
*(2) BTR screws: hexagon socket head. In accordance with local electrical wiring regulations, a size 4 insulated Allen key must be used (reference **LADALLEN4**, see page B8/42).*

Please check the availability of your variant in the index page B11/20. The SEARCH function of your viewer can be used.

Overload relays

3-pole differential termal overload relays for Deca contactors - Class 20

- for use with fuses or magnetic circuit breakers ref. GV2L and GV3L
- compensated relays with manual or automatic reset
- with relay trip indicator
- for a.c. or d.c.

PB121670_R.eps



LRD05L...LRD32L

Relay setting range (A)	Fuses to be used with selected relay aM (A)	gG (A)	BS88 (A)	For use with contactor LC1	Reference
Classes 20 (1) for connection by screw clamp terminals					
0.63...1	2	4	-	D09…D38	**LRD05L**
1...1.6	2	4	6	D09…D38	**LRD06L**
1.6...2.5	4	6	10	D09…D38	**LRD07L**
2.5...4	6	10	16	D09…D38	**LRD08L**
4...6	8	16	16	D09…D38	**LRD10L**
5.5...8	12	20	20	D09…D38	**LRD12L**
7...10	12	20	20	D09…D38	**LRD14L**
9...13	16	25	25	D12…D38	**LRD16L**
12...18	20	35	32	D18…D38	**LRD21L**
17...24	25	50	50	D25…D38	**LRD22L**
23...32	40	63	63	D25…D38	**LRD32L**
Class 20 (1) for connection by EverLink® BTR screw connectors (2)					
9…13	20	32	35	D40A…D65A	**LRD313L**
12…18	25	40	40	D40A…D65A	**LRD318L**
17…25	32	50	50	D40A…D65A	**LRD325L**
23…32	40	63	63	D40A…D65A	**LRD332L**
30…40	50	80	80	D40A…D65A	**LRD340L**
37…50	63	100	100	D40A…D65A	**LRD350L**
48…65	80	125	125	D50A and D65A	**LRD365L**
Classes 20 (1) for connection by screw clamp terminals					
17…25	32	50	50	D80 and D95	**LR2D3522**
23…32	40	63	63	D80 and D95	**LR2D3553**
30…40	40	100	80	D80 and D95	**LR2D3555**
37…50	63	100	100	D80 and D95	**LR2D3557**
48…65	80	125	100	D80 and D95	**LR2D3559**
55…70	100	125	125	D80 and D95	**LR2D3561**
63…80	100	160	125	D80 and D95	**LR2D3563**

PB123838.tif



LR2D35●●

Class 20 (1) for connection by lugs

For relays LRD05L to LRD32L and relays LRD313L to LRD365L, select the appropriate overload relay with screw clamp terminals or connectors from the table above and add the suffixe **6**.
Example: **LRD05L** becomes **LRD05L6**.

Thermal overload relays for use with unbalanced loads

Class 20 (1) for connection by screw clamp terminals or lugs

For relays LRD05L to LRD32L and relays LR2D3522 to LR2D3563, select the appropriate overload relay with screw clamp terminals or connectors from the table above and change the prefix LRD or LR2D to **LR3D**.
Example: **LRD05L** becomes **LR3D05L**.

(1) Standard IEC 60947-4-1 specifies a tripping time for 7.2 times the setting current I_R:
class 20: between 6 and 20 seconds
*(2) BTR screws: hexagon socket head. In accordance with local electrical wiring regulations, a size 4 insulated Allen key must be used (reference **LADALLEN4**, see page B8/42).*

Please check the availability of your variant in the index page B11/20. The SEARCH function of your viewer can be used.

Overload relays

3-pole differential thermal overload relays for Deca contactors - Class 20

- for use with fuses or magnetic circuit breakers ref. GV2L and GV3L
- compensated relays with manual or automatic reset
- with relay trip indicator
- for a.c. or d.c.

Relay setting range (A)	Fuses to be used with selected relay			For mounting beneath contactor	Reference
	aM (A)	gG (A)	BS88 (A)	LC1	
Class 20 (1) with connection by EverLink® BTR screw connectors (2) and control by spring terminals					
9…13	20	32	35	D40A…D65A	**LRD313L3**

(1) Standard IEC 60947-4-1 specifies a tripping time for 7.2 times the setting current I_R:
class 10: between 4 and 10 seconds,
class 10 A: between 2 and 10 seconds,
class 20: between 6 and 20 seconds.
*(2) BTR screws: hexagon socket head. In accordance with local electrical wiring regulations, a size 4 insulated Allen key must be used (reference **LADALLEN4**, see page B8/42).*

Characteristics:
pages B11/31 to B11/34,
pages B11/38 to B11/41

Dimensions:
pages B11/35 to B11/37
and B11/42

Schemes:
pages B11/37 and B11/43

DB439338.eps

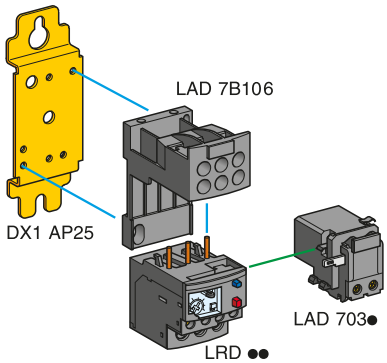

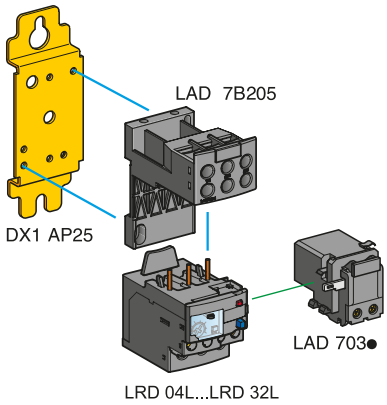

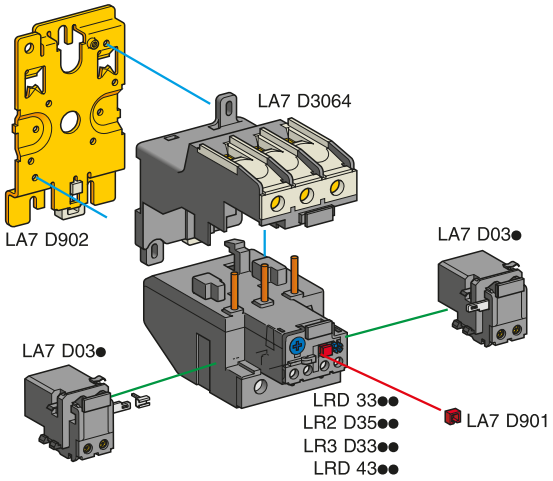

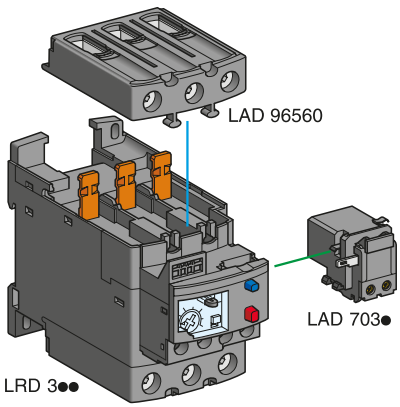

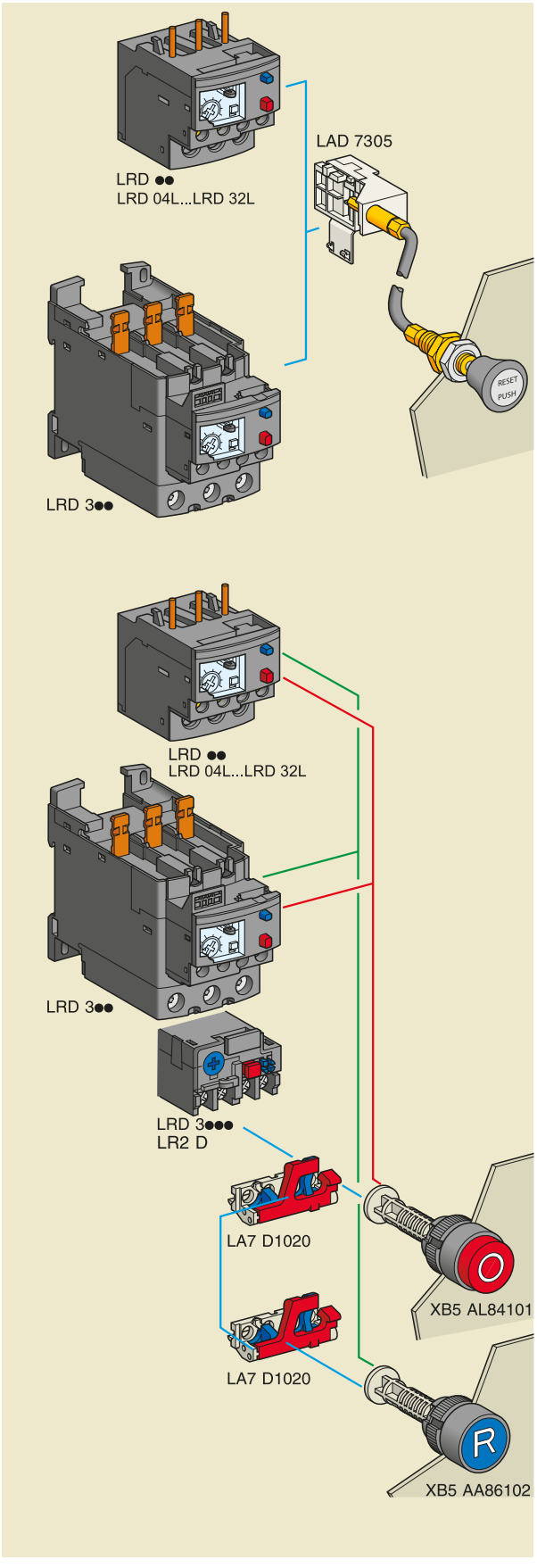

Product references

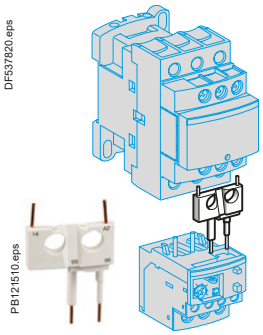

LAD7C●

Separate components for relays

Description	For use with	Sold in lots of	Unit reference
Pre-wiring kit allowing direct connection of the N/C contact of relay LRD01…35 or LR3D02…D35 to the contactor	LC1D09…D18	10	**LAD7C1** (1)
	LC1D25…D38	10	**LAD7C2** (1)
Terminal block (2) for clip-on mounting on 35 mm rail (AM1DP200) or screw fixing; for fixing centres, see pages B11/35 to B11/37	LRD01…35 and LR3D02…D35	1	**LAD7B106**
	LRD05L...LRD32L, LR3D05L...LR3D32L	1	**LAD7B205**
	LRD33●●, LR3D33●●, LR2D35●●, LR3D35●●	1	**LA7D3064** (3)
EverLink® terminal block for independent mounting	LRD3●●, LRD3●●L and LR3D3●●	1	**LAD96560**
Size 4 Allen key, insulated, 1000 V	LRD3●●, LRD3●●L and LR3D3●●	5	**LADALLEN4**
Terminal block adapter for mounting a relay beneath an LC1D115 or D150 contactor	LRD33●●, LR3D33●●, LRD35●●	1	**LA7D3058** (3)
Mounting plates (4) for screw fixing on 110 mm centres	LRD01…35, LR3D02…D35, LRD05L... LRD32L, LR3D05L...LR3D32L	10	**DX1AP25**
	LRD3●●●, LR3D3●●●, LR2D35●●	1	**LA7D902**
Marker holders, snap-in 8 x 18 mm	LRD3●●	100	**LAD90**
	All relays except LRD01…35, LRD05L...32L, LR3D05L...D32L LR3D02…D35, LRD3●●, LRD3●●L and LR3D3●●	100	**LA7D903**
Bag of 400 blank legends (self-adhesive, 7 x 16 mm)	All relays	1	**LA9D91**
Remote Stop or electrical reset device (5)	LRD01…35, LR3D02…D35, LRD05L...32L, LR3D05L...D32L and LRD313…LRD380	1	**LAD703●** (6) (7)
Remote tripping or electrical reset device (5)	All relays except LRD01…35, LR9D01...32, LRD05L...32L, LR3D05L...D32L, LR3D02…D35, LR9D01...32, LRD3●●, LRD3●●L and LR3D3●●	1	**LA7D03●** (6)
Block of insulated terminals	LR9D	2	**LA9F103** (7)
IP 20 cover for lug type terminals for independent mounting	LRD3256…3806	1	**LAD96570**
IP 20 cover for lug type terminals for mounting with contactor LC1D40A6…D65A6	LRD3256…3806	1	**LAD96575**
Terminal block for lug type terminals for independent mounting	LRD3256…3806	1	**LAD96566**

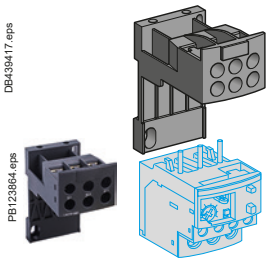

LAD7B106

Remote control

"Reset" function

Description	For use with	Sold in lots of	Unit reference
By flexible cable (length = 0.5 m)	LRD01…35, LR3D02…D35, LR3D05L...D32L and LRD313…LRD380, LRD05L...LRD32L	1	**LAD7305** (8)
	All relays except LRD01...35, LR3D02...D35, LRD3●●, LRD05L...32L, LR3D05L...D32L, LRD3●●L, LR3D3●●, LR9D01	1	**LA7D305**

LAD96570

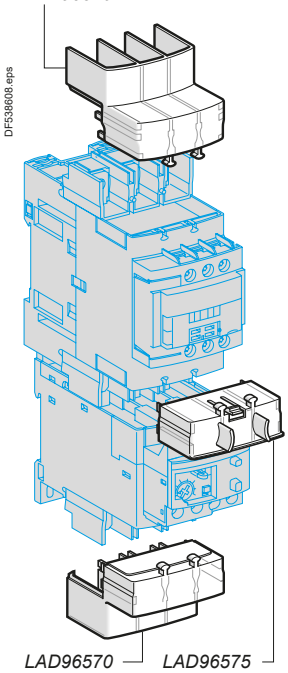

LAD96570 *LAD96575*

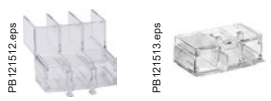

"Stop" and/or "Reset" functions

The terminal protection shroud must be removed and the following 3 products must be ordered separately:

Adapter for door mounting	LRD33●●, LR2D		1	**LA7D1020**
Operating heads for spring return pushbutton	Stop	All relays	1	**XB5AL84101**
	Reset	All relays	1	**XB5AA86102**

(1) These pre-wiring kits cannot be used with reversing contactors.
(2) Terminal blocks are supplied with terminals protected against direct finger contact and screws in the open, "ready-to-tighten" position.
*(3) To order a terminal block for connection by lugs, the reference becomes **LA7D30646**.*
(4) Remember to order the terminal block corresponding to the type of relay.
*(5) The time for which the coil of remote tripping or electrical resetting device **LA7D03** or **LAD703** can remain energised depends on its rest time: 1 s pulse duration with 9 s rest time; 5 s pulse duration with 30 s rest time; 10 s pulse duration with 90 s rest time; maximum pulse duration 20 s with a rest time of 300 s. Minimum pulse time: 200 ms.*
(6) Reference to be completed by adding the code indicating the control circuit voltage.
Standard control circuit voltages (for other voltages, please consult your Regional Sales Office):

Volts	12	24	48	96	110	220/230	380/400	415/440
50/60 Hz	–	B	E	–	F	M	Q	N
Consumption, inrush and sealed: < 100 VA								
⎓	J	B	E	DD	F	M	–	–
Consumption, inrush and sealed: < 100 W.								

(7) Only one terminal block can be mounted below LR9D.
(8) Not compatible with 3-pole relays fitted with spring terminals.

Product references

Electronic thermal overload relays for Deca contactors

- for use with fuses or magnetic circuit breakers
- compensated relays, with relay trip indicator,
- for a.c.,
- for direct mounting on contactor or independent mounting (1).

Relay setting range	Fuses to be used with selected relay		For direct mounting beneath contactor LC1	Reference
	aM	gG		
A	A	A		
Classes 5.10.20.30 (1) selectable for direct connection on Deca contactors or connection using connectors				
0.1...0.5			D09…D38	**LR9D01**
0.4...2			D09…D38	**LR9D02**
1.6…8			D09…D38	**LR9D08**
6.4…32			D09…D38	**LR9D32**
Classes 10 or 10 A (1) for connection using bars or connectors				
60…100	100	160	D115…D150	**LR9D5367**
90…150	160	250	D115…D150	**LR9D5369**
Classes 20 (1) for connection using bars or connectors				
60…100	125	160	D115…D150	**LR9D5567**
90…150	200	250	D115…D150	**LR9D5569**

PB114690.eps



LR9D0● and LR9D32

PB108399.eps



LR9D5567

Separate components for relays

Description	For use with	Sold in lots of	Unit reference
Terminal block (2) For clips-on mounting on 35 mm rails (AM1DP200) or screws fixing; for fixing centres, see pages B11/35 to B11/37	LR9D01, LR9D02, LR9D08, LR9D32	1	**LAD7B205**

PB121746.eps



LAD7B205

PB121747.eps



LAD7B205 mounted on LR9D01

Electronic overload relays for balanced or unbalanced loads

Relay setting range	Fuses to be used with selected relay		For direct mounting beneath contactor LC1	Reference
	aM	gG		
A	A	A		
Classes 10 or 20 (1) selectable for direct connection using bars or connectors				
60…100	100	160	D115…D150	**LR9D67**
90…150	160	250	D115…D150	**LR9D69**

PB114693.eps



LR9D67

(1) Standard IEC 60947-4-1 specifies a tripping time for 7.2 times the setting current I_R:
class 5: between 0.5 and 5 seconds
class 10: between 4 and 10 seconds
class 10 A: between 2 and 10 seconds
class 20: between 6 and 20 seconds
class 30: between 9 and 30 seconds.
(2) Terminal blocks are supplied with terminals protected against direct finger contact and screws in the open, "ready-to-tighten" position.

Overload relays

Life Is On Schneider Electric

> Intelligent design for greater advantages

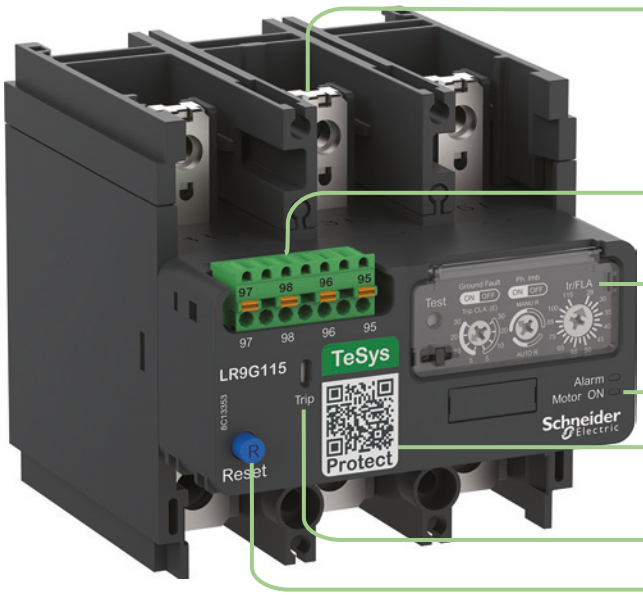

- Pole pitch aligned with TeSys Giga Contactor
- Push-in type control terminals
- Wide range of overload setting with trip class & ground fault protection
- Motor ON and trip Alarm indicators
- Unique QR code providing quick access to complete product data
- Relay trip indication
- Manual Reset button

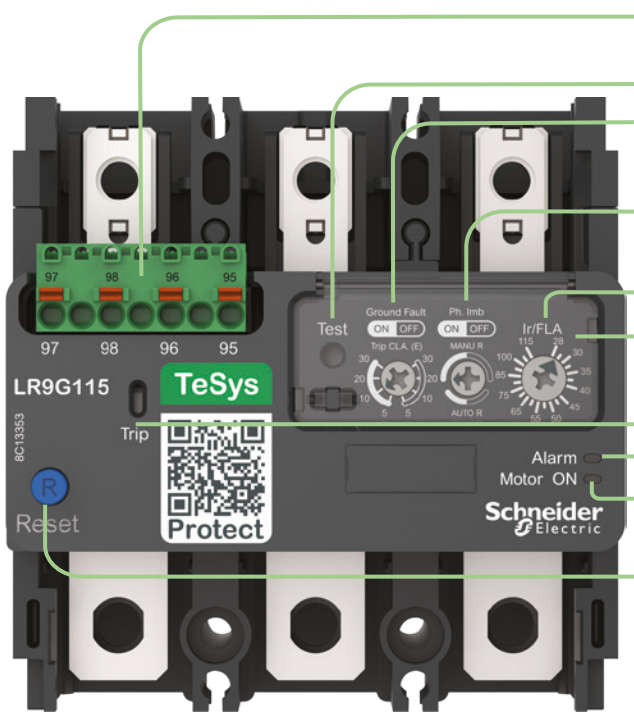

- 1 NO + 1 NC trip contacts with push-in type terminals
- Test button
- 5E…30E trip class selection with ground fault protection option
- Manual/auto reset selection with phase imbalance protection option
- Setting dial for current Ir
- Transparent cover with seal protection
- Trip indicator
- Trip alarm LED indication
- Motor ON LED indication
- Manual reset button

Perfect selection for your motor protection

Range
- A comprehensive range of TeSys Giga Electronic overload relays in 3 sizes
- Direct mounting of relay with contactors saving in panel space and installation time



28…115 A and 57…225 A



125…500 A



160...630 A

Overload relays
- Advanced electronic monitoring with high accuracy
- Thermal compensation for ambient temperatures up to 60 °C
- Wide range of current settings, 0.25...1 Ir setting
- Direct and separately mountable to manage panel design
- Pole pitch alignment with contactors, enabling direct mounting
- Push-in terminals for quick and easy control wiring options
- 4 references covering the complete range means less inventory
- Manual and auto reset to suit your needs
- Multiple reset options: Manual, Automatic & Remote
- Protection against phase loss
- Selectable protection against imbalanced load
- Selectable protection against ground fault
- ON status and overload alarm signaling by LED
- TRIP indicator

Certifications
- Multiple standards
- International certifications

Trip class
- Selectable, from class 5E to class 30E to suit different application needs

Product references – coding principle



LR9	G	630
Electronic overload relay	TeSys Giga series	**Protection settings** 115: 28…115 A 225: 57…225 A 500: 125…500 A 630: 160…630 A

Product references

PB121623_R.tif



LR9G225

TeSys Giga Electronic overload relays

- Electronic overload relay
- Suitable for independent mounting or direct mounting with TeSys Giga contactors
- Ergonomic rotary switches for thermal and protection settings
- Trip class selection: 5E/10E/20E/30E
- Overload, phase imbalance, phase loss and ground fault protections
- Manual and auto reset options
- LED indicator for Motor ON and pre-trip alarm
- Thermal memory and compensation
- Push-in terminals for control connections

PB121647.tif



Direct mounting with TeSys Giga Contactor

Relay setting range	Fuses to be used with selected relay		For direct mounting beneath contactor LC1G	Reference
	aM /gG/aR	kA		
A	A			
Class 5E...30E				
28…115	125 aM	100	LC1G115…225	**LR9G115**
57…225	250 aM	100	LC1G115…225	**LR9G225**
125…500	630 aM	100	LC1G265…500	**LR9G500**
	630 gG	80		
	630 aR	25		
160…630	800 aR	100	LC1G630	**LR9G630**
	800 aR	80		
	800 aR	25		

Overload relay accessories

PB121632.eps



LA9G3650

LA9G82_ISO.eps



LA9G82

PB121626.eps



LA9G3704

Mounting and wiring accessories

Description	Reference
Mounting base for alignment of LR9G115-225 with LC1G115-225 (2)	**LA9G3650**
Mounting base for alignment of LR9G500 with LC1G265-330 (2)	**LA9G3651**
Mounting base for alignment of LR9G500 with LC1G400-500 (2)	**LA9G3652**
Mounting base for alignment of LR9G630 with LC1G630-800 (2)	**LA9G3653**
Push-in connection adapter	**LA9G82**

Front protection cover

Description	Compatible with contactors	Quantity	Reference
Front protection cover (3)	LR9G115 / LR9G225	1	**LA9G3704**
	LR9G500	1	**LA9G3705**
	LR9G630	1	**LA9G3706**

(2) Used for independent mounting of Overload Relay beneath contactor to align main power pole connections.
(3) Used to cover main power connection terminals between contactor and overload with direct mounting option.

Overload relays

Introduction: pages B11/11 to B11/12
Characteristics: pages B11/44 to B11/46
Dimensions: page B11/47

Product references

PB121733.eps



LAD703●

Remote Reset control device

Description	Quantity	Reference
Remote electrical reset device (1)	1	**LAD703●** (2)
Remote Reset function control by flexible cable (length = 0.5 m)	1	**LAD7305**

(1) The time for which the coil of remote electrical reset device LAD703● can remain energised depends on its rest time: 1 s pulse duration with 9 s rest time; 5 s pulse duration with 30 s rest time; 10 s pulse duration with 90 s rest time. Maximum pulse duration of 20 s with rest time of 300 s. Minimum pulse time: 200 ms.
(2) Reference to be completed by adding the coil voltage code.

PB121732.eps



LAD7305

Standard control circuit voltages

Volts	24	110	220/230
∿ 50/60 Hz	B	F	M
Consumption, inrush and sealed: < 100 VA			
⎓	B	F	M
Consumption, inrush and sealed: < 100 W.			

Product references

PB121494.eps



RM1XA●●●

Single-pole, non-latching, over current relays

With 1 C/O contact block

Recommanded operating range (motor In)		Setting range (trip current)	Maximum continuous current ∼ or ⎓	Reference
A		A	A	
∼ or ⎓	0.7…1.15	1.25…4	1.6	**RM1XA001**
	3…4.6	5…16	6.3	**RM1XA006**
	7.3…11.5	12.5…40	16	**RM1XA016**
	18.1…29	32…100	40	**RM1XA040**
	46.1…72	80…250	100	**RM1XA100**
	73…115	125…400	160	**RM1XA160**
	146…230	250…800	315	**RM1XA315**
	231…360	400 …1250	500	**RM1XA500**

Overload relays

Characteristics: page B11/48
Dimensions: page B11/49
Schemes: page B11/49

Product references



RM1XA3151

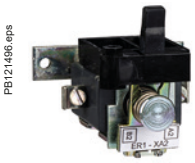

ER1XA2M

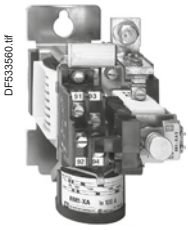

ER1XA2● mounted on RM1XA3151

Single-pole, latching, manual reset, over current relays

With 1 C/O contact block

Recommanded operating range (motor In)	Setting range (trip current)	Maximum continuous current ∼ or ⎓	Reference
A	A	A	
146…230	250…800	315	**RM1XA3151**

Accessories (to be ordered separately)

Description	Reference
Electrical reset [(1)] (consumption: inrush, sealed: 500 VA, 220 V 50 Hz coil) (fitted to the relay together with a latching contact block)	**ER1XA2M**

(1) The impulse duration must not exceed 2 seconds within 10 minute intervals.

Overload relays

Characteristics: page B11/48
Dimensions: page B11/49
Schemes: page B11/49

Life Is On Schneider Electric

Product references

PB121498.eps



LT3SE00M

Protection units

- to be used with PTC thermistor probes
- with thermistor short-circuit detection
- The contact changes state when a rapid rise in temperature above the nominal probe rating is detected.

With automatic reset

Connection	Voltage		Output contact	Reference
Cage connectors	∿ 50/60 Hz	115 V	N/C	**LT3SE00F**
		230 V	N/C	**LT3SE00M**
	⎓	24 V	N/C	**LT3SE00BD**

Units with automatic reset and front signalling by LED's (Power-Fault)

Connection	Voltage		Output contact	Reference
Cage connectors	∿ 50/60 Hz	115/230 V	N/C + N/O	**LT3SA00M**
	⎓	24/48 V	N/C + N/O	**LT3SA00ED**
	∿ 50/60 Hz or ⎓	24…230 V	2 C/O	**LT3SA00MW**

PB121499.eps



LT3SA00M

Manual reset, on front: Test/Reset pushbutton Power + Fault LED's

Connection	Voltage		Output contact	Reference
Cage connectors	∿ 50/60 Hz	400 V	N/C + N/O	**LT3SM00V**
		24/48 V	N/C + N/O	**LT3SM00E**
		115/230 V	N/C + N/O	**LT3SM00M**
	⎓	24/48 V	N/C + N/O	**LT3SM00ED**
	∿ 50/60 Hz or ⎓	24…230 V	2 C/O	**LT3SM00MW**

PB121500.eps



LT3SM00M

Overload relays

Characteristics: pages B11/50 to B11/53
Dimensions: page B11/54
Schemes: pages B11/54 and B11/55

Product references

PB121508.eps



DA1TT●●●

813383.tif

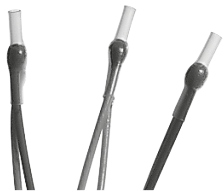

Triple probe to be inserted into equipment

PB121509.eps



DA1TS●●●

813384.tif



Probe to be screwed on equipment casing

PTC thermistor probes

Description	Nominal Operating Temperature (NOT)	Colour	Sold in lots of	Unit reference
	° C			
Integrated triple probes	90	Green/green	10	**DA1TT090**
	110	Brown/brown	10	**DA1TT110**
	120	Grey/grey	10	**DA1TT120**
	130	Blue/blue	10	**DA1TT130**
	140	White/blue	10	**DA1TT140**
	150	Black/black	10	**DA1TT150**
	160	Blue/red	10	**DA1TT160**
	170	White/green	10	**DA1TT170**
Surface probes	60	White/grey	10	**DA1TS060**
	70	White/brown	10	**DA1TS070**
	80	White/white	10	**DA1TS080**
	90	Green/green	10	**DA1TS090**
	100	Red/red	10	**DA1TS100**

Accessories (to be ordered separately)

Mounting accessories

Description	Applicationi	Sold in lots of	Unit reference
Adapter	For fixing on ⊔ rail DZ5 MB	10	**RHZ66**

Marking accessories

Clip-in markers (maximum of 5 per unit)	Strips of 10 identical numbers (0 to 9)	25	**AB1R●** (2)
	Strips of 10 identical capital letters (A to Z)	25	**AB1G●** (2)

(1) PTC: Positive Temperature Coefficient.
(2) When ordering, replace the ● in the reference with the number or letter required.

Product references

PB111974.eps



LR97D07●●

LR97D electronic over current relays

Relay setting range	Usable range (1)	For use with contactor (2)	Relay supply voltage	Reference (3)
A	A			
0.3…1.5	**0.3…1.3**	LC1 D09…D38	∼ 200…240 V	**LR97D015M7**
			∼ 100…120 V	**LR97D015F7**
			⎓/∼ 24 V	**LR97D015B**
			⎓/∼ 48 V	**LR97D015E**
1.2…7	**1.2…6**	LC1 D09…D38	∼ 200…240 V	**LR97D07M7**
			∼ 100…120 V	**LR97D07F7**
			⎓/∼ 24 V	**LR97D07B**
			⎓/∼ 48 V	**LR97D07E**
5…25	**5…21**	LC1 D09…D38	∼ 200…240 V	**LR97D25M7**
			∼ 100…120 V	**LR97D25F7**
			⎓/∼ 24 V	**LR97D25B**
			⎓/∼ 48 V	**LR97D25E**
20…38	**20…34**	LC1 D25…D38	∼ 200…240 V	**LR97D38M7**
			∼ 100…120 V	**LR97D38F7**
			⎓/∼ 24 V	**LR97D38B**
			⎓/∼ 48 V	**LR97D38E**

PB111927.eps



LT4730●●●

LT47 electronic over current relays

Relay setting range	Usable range (1)	Relay supply voltage	Reference
A	A		
LT47 relay with manual/electric reset			
0.5…6	**0.5…5**	∼ 200…240 V	**LT4706M7S**
		∼ 100…120 V	**LT4706F7S**
		⎓/∼ 24 V	**LT4706BS**
3…30	**3…25**	∼ 200…240 V	**LT4730M7S**
		∼ 100…120 V	**LT4730F7S**
		⎓/∼ 24 V	**LT4730BS**
5…60	**5…50**	∼ 200…240 V	**LT4760M7S**
		∼ 100…120 V	**LT4760F7S**
		⎓/∼ 24 V	**LT4760BS**
		⎓/∼ 48 V	**LT4760ES**
LT47 relay with automatic reset			
0.5…6	**0.5…5**	∼ 200…240 V	**LT4706M7A**
		⎓/∼ 24 V	**LT4706BA**
3…30	**3…25**	∼ 200…240 V	**LT4730M7A**
		∼ 100…120 V	**LT4730F7A**
		⎓/∼ 24 V	**LT4730BA**
		⎓/∼ 48 V	**LT4730EA**
5…60	**5…50**	∼ 200…240 V	**LT4760M7A**
		⎓/∼ 24 V	**LT4760BA**

Accessories (to be ordered separately)

Description	For use with	Sold in lots of	Unit reference
Pre-wiring kits allowing connection of the LR97D relay N/C contact directly to the contactor	LC1 D09…D18	10	**LAD7C1**
	LC1 D25…D38	10	**LAD7C2**
Terminal block for clip-on mounting on 35 mm rail (AM1 DP200)	LR97D	1	**LAD7B106**

(1) To allow adjustment of the tripping sensitivity, see adjustment method (page B11/56).
(2) Please see chapter B8.
(3) If a pre-wiring kit is used, it is no longer possible to electrically wire signalling of tripped status.

Overload relays

Characteristics: pages B11/56 to B11/59
Dimensions, schemes: page B11/60

Product references

DA1TT090	LR3D03	LR7K0306	LRD08L	LRD3359
DA1TT110	LR3D04	LR7K0308	LRD08L6	LRD3359A66
DA1TT120	LR3D046	LR7K0310	LRD10	LRD3361
DA1TT130	LR3D05	LR7K0312	LRD103	LRD3363
DA1TT140	LR3D056	LR7K0314	LRD106	LRD3365
DA1TT150	LR3D06	LR7K0316	LRD10L	LRD33656
DA1TT160	LR3D066	LR97D015B	LRD10L6	LRD33676
DA1TT170	LR3D07	LR97D015E	LRD12	LRD33696
DPER01	LR3D076	LR97D015F7	LRD123	LRD340
DPER21	LR3D07L	LR97D015M7	LRD126	LRD3406
DPER32	LR3D08	LR97D07B	LRD12L	LRD340L
DPER35	LR3D086	LR97D07E	LRD14	LRD340L6
ER1XA2M	LR3D08L	LR97D07F7	LRD143	LRD35
LA7D03B	LR3D10	LR97D07M7	LRD146	LRD350
LA7D03F	LR3D106	LR97D25B	LRD14L	LRD3503
LA7D03M	LR3D10L	LR97D25E	LRD1508	LRD3506
LA7D03Q	LR3D12	LR97D25F7	LRD1510	LRD350L
LA7D1020	LR3D126	LR97D25M7	LRD1512	LRD356
LA7D1064	LR3D12L	LR97D38B	LRD1514	LRD365
LA7D305	LR3D14	LR97D38E	LRD1516	LRD3653
LA7D3058	LR3D146	LR97D38F7	LRD1521	LRD3656
LA7D3064	LR3D14L	LR97D38M7	LRD1522	LRD365L
LA7D30646	LR3D16	LR9D5367	LRD1530	LRD365L6
LA7D903	LR3D166	LR9D5369	LRD1532	LRD380
LA7K0064	LR3D16L	LR9D5567	LRD16	LRD3803
LA9D730	LR3D21	LR9D5569	LRD163	LRD3806
LA9D91	LR3D216	LR9D67	LRD166	LRD4365
LAD703B	LR3D21L	LR9D69	LRD16L	LRD4367
LAD703E	LR3D22	LR9G115	LRD16L6	LRD4369
LAD703F	LR3D226	LR9G225	LRD21	LRD488C
LAD703M	LR3D22L	LR9G500	LRD213	LT4706BA
LAD703Q	LR3D313	LR9G630	LRD216	LT4706BS
LAD7305	LR3D318	LA9G3650	LRD21L	LT4706F7S
LAD7B105	LR3D32	LA9G3651	LRD21L6	LT4706M7A
LAD7B1056	LR3D325	LA9G3652	LRD22	LT4706M7S
LAD7B106	LR3D326	LA9G3653	LRD223	LT4730BA
LAD7B205	LR3D32L	LA9G82	LRD226	LT4730BS
LAD7C1	LR3D332	LA9G3704	LRD22L	LT4730EA
LAD7C2	LR3D3322	LA9G3705	LRD22L6	LT4730F7A
LR2D3522	LR3D3353	LA9G3706	LRD313	LT4730F7S
LR2D3553	LR3D3355	LRD01	LRD313L	LT4730M7A
LR2D3555	LR3D3363	LRD02	LRD318	LT4730M7S
LR2D3557	LR3D3365	LRD03	LRD318L	LT4760BA
LR2D3559	LR3D340	LRD04	LRD32	LT4760BS
LR2D3561	LR3D35	LRD046	LRD325	LT4760ES
LR2D3563	LR3D350	LRD04L6	LRD3256	LT4760F7S
LR2K0301	LR3D3522	LRD05	LRD325L	LT4760M7A
LR2K0302	LR3D3553	LRD056	LRD326	LT4760M7S
LR2K0303	LR3D3555	LRD05L	LRD32L	RM1XA001
LR2K0304	LR3D3557	LRD06	LRD32L6	RM1XA006
LR2K0305	LR3D3559	LRD063	LRD3312	RM1XA016
LR2K0306	LR3D3561	LRD066	LRD3314	RM1XA040
LR2K0307	LR3D3563	LRD06L	LRD332	RM1XA100
LR2K0308	LR3D365	LRD07	LRD3322	RM1XA160
LR2K0310	LR3D380	LRD073	LRD3323	RM1XA315
LR2K0312	LR3D3803	LRD076	LRD332L	RM1XA3151
LR2K0314	LR3D3806	LRD07L	LRD3353	RM1XA500
LR2K0316	LR3D4365	LRD07L6	LRD3353A66	
LR2K0321	LR3D4367	LRD08	LRD3355	
LR2K0322	LR3D4369	LRD083	LRD3357	
LR3D02	LR7K0305	LRD086	LRD3357A66	

This document is current. Click on the product reference to get the most recent availability status (hyperlink to **se.com** product datasheet). If your product variant is no longer available, please consult your distributor or regional sales office.

TeSys LRK, Deca Overload relays

Technical Data for Designers

Contents

Motor and machine protection ..... B11/22 to B11/27

TeSys LRK - thermal overload protection:
- > characteristics ..... B11/28 to B11/29
- > dimensions and schemes B11/30

Deca - thermal overload protection:
- > characteristics ..... B11/31 to B11/34
- > dimensions ..... B11/35 to B11/37
- > schemes B11/37

Deca - electronic thermal overload protection:
- > characteristics ..... B11/38 to B11/41
- > dimensions B11/42
- > schemes B11/43

Giga - electronic overload relays:
- > characteristics ..... B11/44 to B11/46
- > dimensions and diagram B11/47

RM1 - single pole magnetic over current relays:
- > characteristics B11/48
- > dimensions and schemes B11/49

LT3 - thermistor protection unit:
- > characteristics ..... B11/50 to B11/53
- > dimensions and schemes ..... B11/54 to B11/55

LR97, LT47 - electronic over current relays:
- > characteristics ..... B11/56 to B11/59
- > dimensions and schemes B11/60

Introduction

Exceeding the operating limits of an electric motor will lead, eventually, not only to destruction of the motor itself but also of the mechanisms it drives.

This type of load can be the cause of electrical or mechanical faults.
■ Electrical faults:
□ overvoltage, voltage drop, imbalance and phase failure which cause variations in the current drawn,
□ short-circuits which can cause the current to reach levels capable of destroying the load.

■ Mechanical faults:
□ locked rotor,
□ brief or prolonged overload which leads to an increase in the current drawn by the motor, and therefore overheating.

The cost of these faults must take into account loss of production, loss of raw materials, repair of the production tool, poor quality of production and delays in delivery.

These faults can also have dramatic consequences on the safety of persons in direct or indirect contact with the motor.

To prevent these faults, protection measures are necessary. They make it possible to isolate the equipment to be protected from the mains supply by measuring variations in electrical values (voltage, current, etc.).

Each motor starter must therefore have:

■ **short-circuit protection**, to detect and break, as quickly as possible, abnormal currents generally greater than 10 times the rated current (In).

■ **overload protection**, to detect increases in current up to about 10 In and switch off the starter before overheating of the motor and conductors damages the insulation.

This protection is provided by specific devices such as fuses, circuit breakers and thermal overload relays, or by more integrated devices offering several types of protection.

Causes, effects and consequences of various faults

There are two types of fault:
- Internal faults within the motor
- External faults: these are located outside the electric motor but their consequences can lead to damage inside the motor.

Faults	Causes	Effects	Consequences on the motor and on the machine
Short-circuit	Contact between several phases, or between one phase and neutral or between several turns of the same phase.	■ Current peak ■ Electrodynamic forces on the conductors	Destruction of windings
Overvoltage	■ Lightning ■ Electrostatic discharge ■ Operation	Dielectric breakdown in the windings	Destruction of the windings due to loss of insulation
Phase imbalance and phase failure	■ Opening of a phase ■ Single-phase load upstream of the motor ■ Short-circuit between the turns of the same winding	■ Reduction of usable torque, efficiency and speed ■ Increase in losses ■ Starting impossible if phase failure	Overheating (1)
High starting frequency	■ Failure of the automation system ■ Too many manual control operations ■ Numerous fault trips	High stator and rotor temperature rise due to the frequent start current	Overheating (1) Consequences on the process
Voltage variations	■ Instability of the mains voltage ■ Connection of heavy loads	■ Reduction of usable torque ■ Increase in losses	Overheating (1)
Harmonics	■ Pollution of the mains supply by variable speed drives, inverters, etc...	■ Reduction of usable torque ■ Increase in losses	Overheating (1)
Long starting time	■ Resistive torque too high (load too heavy) ■ Voltage drop	Increase in starting time	Overheating (1)
Jamming	■ Mechanical problem (crusher) ■ Seizures	Overcurrent	Overheating (1) Consequences on the process
No-load running	■ Pump running empty ■ Mechanical break in drive to the load	Drop in current drawn	Consequences on the process
Frequency fluctuations	■ Overload of a supply powered by limited independent sources ■ Faulty alternator speed regulator	■ Increase in losses ■ Interferes with synchronous devices (clock, recorder, ...)	–
Overload	■ Increase in resistive torque ■ Voltage drop ■ Drop in power factor	Increase in current consumption	Overheating (1)
Loss of machine excitation	■ Significant drop in excitation current ■ Break in rotor winding	■ Increase in active power ■ Drop in power factor	Significant overheating of rotor and cage
Phase-Earth fault	■ Accidental Phase-Earth contacts ■ Accidental Phase-machine casing contacts (casing connected to earth)	■ Overvoltage developed in the mains supply ■ Rise in earth potential (safety of persons)	Consequences on safety of persons

(1) Then, in the longer or shorter term, depending on the seriousness of the fault and/or its frequency, short-circuit and destruction of the windings.

Protection functions

Short-circuit protection

General

A short-circuit results in a very rapid rise in current which can reach several hundred times the value of the operational current. The consequences of a short-circuit are dangerous to both equipment and persons. It is therefore imperative to use protection devices to detect the fault and very quickly break the circuit.

Two types of protection are commonly used:
■ fuses (cutout) which break the circuit by melting, which then requires their replacement,
■ magnetic trip circuit breakers, often more simply called "magnetic circuit breakers", which only require re-setting to put them back into service.
Short-circuit protection can also be built-into multifunction devices such as motor circuit breakers and contactor-breakers.

The main characteristics of short-circuit protection devices are:
■ their breaking capacity: this is the highest prospective short-circuit current value that a protection device can break at a given voltage.
■ their making capacity: this is the highest current value that the protection device can make at its rated voltage in specified conditions.
The making capacity is equal to k times the breaking capacity.

PB111830.eps



Fuse carrier
Ref. LS1D32

PB114116.eps



Switch disconnectors
Ref. GS2N3

Fuses (cutouts)

Fuses provide individual phase protection (single-pole), with a high breaking capacity in a compact size:
■ mounted either in fuse carriers,
■ or in isolators, replacing the original links or shunt bars.

For motor protection, aM type fuses are used. Their design characteristics allow them to conduct the high magnetising currents that occur when motors are switched on. They are therefore unsuitable for overload protection (unlike gG type fuses). This is why an overload relay must be included in the motor power supply circuit.

PB121671.eps



Deca Magnetic circuit breaker
Ref. GV2L

PB114909.eps



Deca Magnetic circuit breaker
Ref. GV4LE

Magnetic circuit breakers

These circuit breakers protect installations against short-circuits, within the limit of their breaking capacity.
Magnetic circuit breakers provide omnipole breaking as standard.
For relatively low short-circuit currents, the operation of a circuit breaker is faster than that of fuses.
This protection conforms to standard IEC 60947-2.
The thermal and electrodynamic effects are also limited, therefore ensuring better protection of cables and equipment.

PB121694.tif



Deca Thermal overload relay
Ref. LRD08

PB121503.eps



Current measurement relay
Ref. RM4JA

Protection functions

Overload protection

General

An overload condition is the most frequently encountered fault. The symptoms are a rise in the current drawn by the motor and thermal effects. A rapid return to normal operating conditions is important.
The actual operating conditions (ambient temperature, operating altitude and type of standard duty) are essential to determine the operating values of the motor (power, current) and to be able to select effective overload protection. These operational values are given by the motor manufacturer.

According to the level required, protection can be provided by:
■ overload relays and thermal overload relays (bi-metallic or electronic type) which protect motors in the event of:
□ overload, by monitoring the current drawn by each phase,
□ phase imbalance or failure, by their differential mechanism.
■ relays with PTC thermistor probes (Positive Temperature Coefficient).
■ overtorque relays,
■ multifunction relays.

Overload relays

These relays protect motors against overload. They must allow the temporary overload that occurs on starting and must only trip if the starting time is abnormally long.
The overload relay will be selected according to the length of the starting time (tripping class) and the motor rating.
These relays have a thermal memory (except for certain electronic overload relays, indicated by their manufacturers) and can be connected:
■ either in series with the load,
■ or to current transformers placed in series with the load.

Bi-metallic thermal overload relays
Combined with a contactor, these relays protect the line and the equipment against small and prolonged overloads. They must be protected against strong overcurrent by a circuit breaker or fuses.
These relays may be used on an a.c. or d.c. system and are generally:
■ 3-pole,
■ compensated, i.e. insensitive to ambient temperature variations,
■ with manual or automatic reset,
■ graduated with a "motor FLC" scale: allowing direct setting to the full load current as shown on the motor rating plate.
They can also be sensitive to phase failure: this is known as 'differential'. This function conforms to standards IEC 60947-4-1 and 60947-6-2.
This type of relay is extremely reliable and is a relatively low cost device.

Electronic thermal overload relays
Electronic thermal overload relays have the advantage of electronics which allow a more complex thermal image of the motor to be created.
They can be combined with products having complementary functions, such as:
■ temperature sensing via PTC probes,
■ protection against jamming and overtorque,
■ protection against phase reversal,
■ earth fault protection,
■ protection against no-load running,
■ alarm function.

PB121507.eps



Relays for use with thermistor probes
Ref. LT3S

PB111974.eps



Instantaneous electronic overcurrent relays
Ref. LR97D07

PB123881.eps



Ultra starter Ref. LUB320 with multifunction control unit Ref. LUCM

PB123882.eps



Ultra controller Ref. LUTM20BL

PB121504.eps



T controller
Ref. LTMR08MBD

Protection functions *(continued)*

Overload protection (continued)

Relays for use with PTC thermistor probes

With direct sensing of the stator windings, these relays can be used to protect motors against:
- overload,
- a rise in ambient temperature,
- a ventilation circuit fault,
- a high starting frequency,
- mechanical shocks, etc.

Overload (or overtorque) relays

These relays protect the drive line in the event of a locked rotor, seizure or mechanical shocks. This is an additional protection.
Unlike thermal overload relays, these relays do not have a thermal memory. They have definite time characteristics (adjustable current threshold and time delay).
The overtorque relay can be used as overload protection for motors with long starting times or very frequent starting (for example, lifting hoists).

Multifunction relays

- Overcurrent relays are limited when it is necessary to take into account problems associated with voltage, temperature or special applications. New production or maintenance management needs have prompted manufacturers to offer products which provide not only adaptable protection, but also complete management of the motor and its load.

They incorporate:
- current and voltage sensors (T controllers),
- hybrid analog and digital electronic technology,
- the use of communication buses for data exchange and control,
- powerful motor modelling algorithms,
- integrated application programs whose parameters can be set.

These products make it possible to reduce installation and operating costs by reducing maintenance and downtime.

Ultra starters:
The multifunction relay is incorporated in the motor starter.
This solution is very compact with reduced wiring. It is limited to 32 A.

Ultra controllers:
The multifunction relay is separate from the power line and reuses the function blocks from the Ultra solution. It can be used in conjunction with a contactor up to 810 A.

T controllers:
The multifunction relay is separate from the power line and incorporates inputs and outputs. It can be used in conjunction with a contactor up to 810 A.

Motor and machine protection

Protection relay selection table

	Motor protection		Machine protection	Motor and machine protection	
Relay type	**Thermal overload relay Ref. LR2K, LRD, LRD3, LR9D (1), LR9G**	**Relays for use with PTC probes Ref. LT3S**	**Overtorque relays Ref. LR97D, LT47**	**Ultra controller Ref. LUTM**	**T controller Ref. LTMR**
Causes of overheating	(2)		(2)	(2)	(3)
Slight overload	■	■	▒	■	■
Locked rotor	■	▒	■	■	■
No-load running				■	■
Supply phase failure	■	▒	LR97D	■	
Ventilation fault		■			With probes
Abnormal temperature rise	▒	■			With probes
Shaft bearing seizure	▒	■	▒	▒	With probes
Insulation fault	▒			■	■
Protracted starting time	■	▒	■	■	■
Severe duty	▒	■	■	▒	With probes
Voltage variation	▒	▒	▒	▒	■
Frequency fluctuations	▒				■
Loss of machine excitation					■

■ Ideally suited
▒ Possible solution
□ Not suitable (no protection)

(1) For motor circuit breaker ref. ***GV2ME****.*
(2) Protection based on current.
(3) Protection based on current and voltage.

Characteristics

Environment

Conforming to standards			IEC/EN 60947-4-1, IEC/EN 60947-5-1, UL 60947-4-1, CSA C22.2 n° 60947-4-1, UL 60947-5-1, CSA C22.2 n° 60947-5-1, GB/T14048.
Product certifications			UL , CSA, CCC, EAC, CB, UKCA certification
Degree of protection	Conforming to IEC 60529		Protection against direct finger contact
Ambient air temperature around the device	Storage	°C	-40...+70
	For normal operation (IEC 60947)	°C	-20...+55 (without derating)
	Operating limit	°C	-30...+60 (with derating) (1)
Maximum operating altitude	Without derating	m	2000
Operating positions			**Vertical axis** 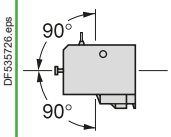 Without derating **Horizontal axis** 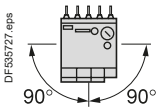 With derating (1)
Flame resistance	Conforming to 60695-2-11	°C	850
Shock resistance, hot state (1/2 sine wave, 11 ms)	Conforming to IEC 60068-2-27, N/C contact		10 gn
	Conforming to IEC 60068-2-27, N/O contact		10 gn
Vibration resistance, hot state 5 to 300 Hz	Conforming to IEC 60068-2-6, N/C contact		2 gn
	Conforming to IEC 60068-2-6, N/O contact		2 gn

Cabling Screw clamp terminals			Minimum	Maximum	Maximum to IEC 60947
	Solid cable	mm^2	1 x 1.5	2 x 4	1 x 4 + 1 x 2.5
	Flexible cable without cable end	mm^2	1 x 0.75	2 x 4	2 x 2.5
	Flexible cable with cable end	mm^2	1 x 0.34	1 x 1.5 + 1 x 2.5	1 x 1.5 + 1 x 2.5

Tightening torque	Philips head n° 2 - Ø6	N.m	0.8
Mounting			Directly under the contactor or reversing contactor
Connections			Made automatically when mounted under the contactor, as follows: ■ contactor terminal A2 connected to overload relay terminal 96 on all products, ■ contactor terminal 14 connected to overload relay terminal 95 on products with 3 P + N/O. When using 3 P + N/C, or 4 P contactors, or the N/O auxiliary contact marked 13-14, at a voltage other than the coil voltage, break off the link marked 14.

Auxiliary contact characteristics

Number of contacts			1 N/C + 1 N/O						
Conventional thermal current		A	6						
Short-circuit protection	Conforming to IEC 60947 gG fuse or circuit breaker GB2CB●●	A	6 max.						
Maximum power of the controlled contactor coils (sealed) (Occasional operating cycles of contact 95-96)	a.c.	V	24	48	110	220/230	400	415/440	600/690
		VA	100	200	400	600	600	600	600
	d.c.	V	24	48	110	220	250	–	–
		W	100	100	50	45	35	–	–
Maximum operational voltage	a.c., category AC-15	V	690						
	d.c., category DC-13	V	250						

(1) Please consult your Regional Sales Office.
(2) Very low safety voltage.

References: pages B11/2 and B11/3
Dimensions: page B11/30
Schemes: page B11/30

Characteristics

Electrical characteristics of the power circuit

Rated operational voltage (Ue)	Up to	**V**	690
Rated insulation voltage (Ui)	Conforming to IEC 60947	**V**	690
	Conforming to UL 60947-4-1, CSA C22.2 n° 60947-4-1	**V**	600
Rated impulse withstand voltage (Uimp)		**kV**	6
Frequency limits of the operational current		**Hz**	Up to 400
Power dissipated per pole		**W**	2

Operating characteristics

Tripping threshold	Conforming to IEC 60947-4-1	**A**	1.14 ±0.06 Ir
Sensitivity to phase failure	Conforming to IEC 60947		Yes
Reset	Manual or automatic		Selected by means of a lockable and sealable switch on the front of the relay
Signalling	On front of relay		Trip indicator
Reset-Stop function			Pressing the Reset-Stop button: - actuates the N/C contact - has no effect on the N/O contact
Test function	By pushbutton		Pressing the Test button enables: - checking of the control circuit wiring - simulation of overload tripping (actuation of both N/C and N/O contacts, and of the trip indicator)
Short-circuit protection and coordination			See pages A5/12 and A5/30

Tripping curves

Average operating time related to multiples of the current setting (Class 10 A)

Balanced 3-phase operation, from cold state

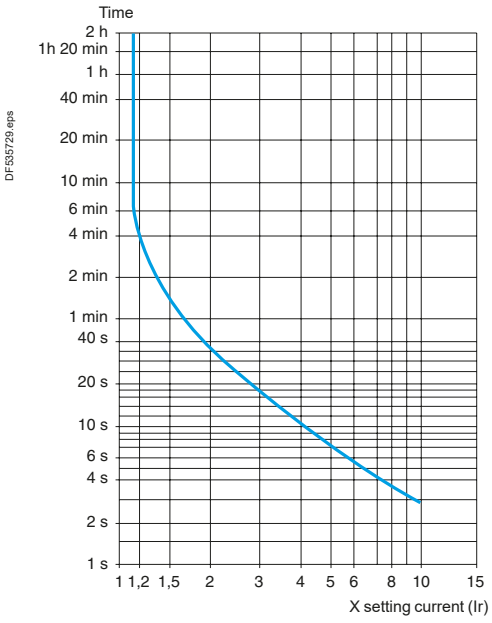

Balanced operation with 2 phases only, from cold state

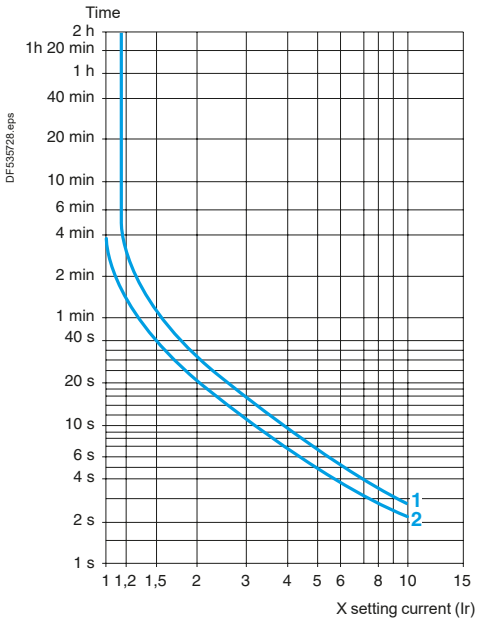

Setting: at lower end of scale

Setting: at upper end of scale

Ref.
Overload relays

References:
pages B11/2 and B11/3

Dimensions:
page B11/30

Schemes:
page B11/30

Dimensions, mounting

LR2K

Direct mounting beneath the contactor

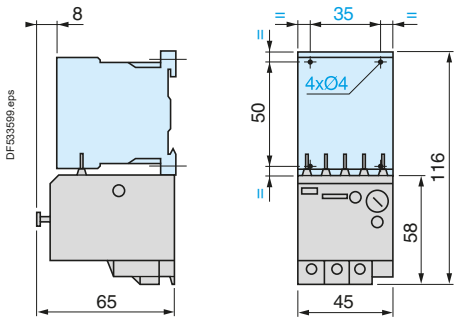

Separate mounting with terminal block LA7 K0064 on 35 mm ⎓ rail
(AM1DP200 or AM1DE200)

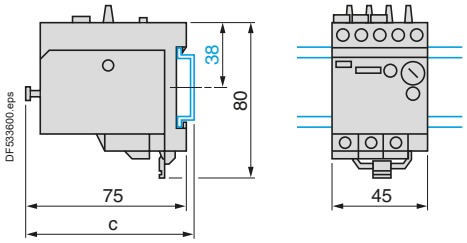

AM1	c
DP200	78.5
DE200	86

Schemes

LR2K

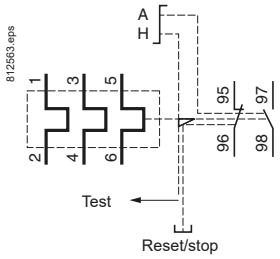

LR2K + LC●K

Pre-wiring scheme

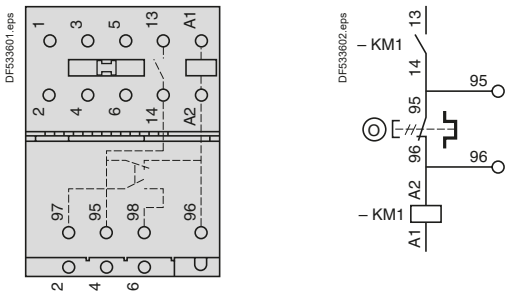

LR7K

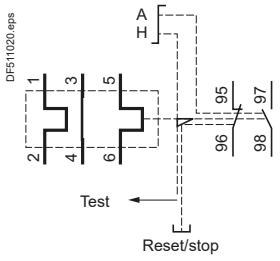

Note: *If pre-wiring is not required, break off the 2 links located on the thermal overload relay.*

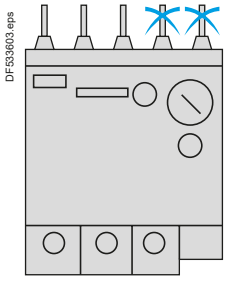

Ref.
Overload relays

PB121694.tif



Ref. LRD08

PB121670_R.eps



Ref. LRD05L...32L

PB123810.eps



Ref. LRD365

EverLink®

PB123837.tif



Ref. LRD33●●

DF567968.eps

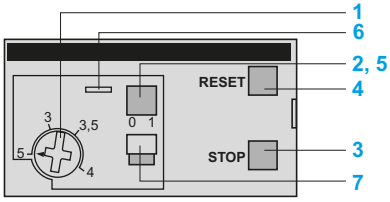

Ref. LRD01…35, LRD05L...32L
LRD313…LRD365

DF567969.eps

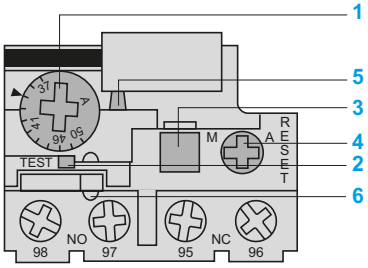

Ref. LRD3361…4369, LR2 D3561…3563

Introduction

3-pole Deca thermal overload relays are designed to protect a.c. circuits and motors against:
- overloads
- phase failure
- excessively long starting times
- prolonged stalled rotor condition.

Power connection

Product references LRD01 to LRD35
LRD01 to 35 relays are designed for connection by screw clamp terminals.
They can be supplied for connection by spring terminals or by lugs (1).

Product references LRD04 to LRD32L
These relays are designed for connection by screw clamp terminals. They can be supplied for connection by lugs (1).

Product references LRD313 to LRD380
These relays are for connection by BTR screw connectors (hexagon socket head).
The screws are tightened by means of a size 4, insulated Allen key.
This type of connection uses the **Ever**Link® system with creep compensation (2) (Schneider Electric patent).
This technique makes it possible to achieve accurate and durable tightening torque.

These relays are also available for connection by lugs (1).
Product references LRD3361 to 4369, LR2D3561 to D3563
Product references LRD3361 to 4369 and LR2D3561 to D3563 relays are designed for connection by screw clamp terminals. They can be supplied for connection by lugs (1).

Description

Deca 3-pole thermal overload relays are designed to protect a.c. circuits and motors against overloads, phase failure, long starting times and prolonged stalling of the motor.

1 Adjustment dial Ir.
2 Test button.
Operation of the Test button allows:
- checking of control circuit wiring,
- simulation of relay tripping (actuates both the N/O and N/C contacts).
3 Stop button. Actuates the N/C contact; does not affect the N/O contact.
4 Reset button.
5 Trip indicator.
6 Setting locked by sealing the cover.
7 Selector for manual or automatic reset.

Product references LRD01 to 35, LRD05L to 32L and LRD313 to LRD380 relays are supplied with the selector in the manual position, protected by a cover. Deliberate action is required to move it to the automatic position.

(1) Connection by lugs meets the requirements of certain Asian markets and is suitable for applications subject to strong vibration, such as railway transport.
(2) Creep: normal crushing phenomenon of copper conductors, that is accentuated over time.

References:
pages B11/4 to B11/7
Dimensions, mounting:
pages B11/35 to B11/37
Schemes:
page B11/37

Characteristics

Environment

Conforming to standards			IEC/EN 60947-4-1, IEC/EN 60947-5-1, UL 60947-4-1, CSA C22.2 n° 60947-4-1 UL 60947-5-1, CSA C22.2 n° 60947-5-1, EN 50495 (1), GB/T 14048.4, GB/T 14048.5
Product certifications			UL (2), CSA (2), UKCA IEC, CCC (3), EAC, ATEX (1) ABS, BV (4), DNV-GL (5), LRoS (6), RINA (7), RMRS (8), EU RO Mutual recognition (9)
Degree of protection (front face)	Conforming to IEC 60529		Protection against direct finger contact IP20
Climatic withstand			Conforming to IACS E10
Ambient air temperature around the device	Storage	°C	-60…+70
	Normal operation, without derating (IEC 60947-4-1)	°C	-20…+60
	Minimum /maximum operating temperatures (with derating)	°C	-20…+70
Operating positions without derating	In relation to normal vertical mounting plane		Any position. When mounting on a vertical rail, use a stop.
Flame resistance	Conforming to 60695-2-11	°C	850
Shock resistance	Permissible acceleration conforming to IEC 60068-2-27		15 gn - 11 ms
Vibration resistance (10)	Permissible acceleration conforming to IEC 60068-2-6		6 gn except LRD05L...LRD32L: 3 gn
Dielectric strength at 50 Hz	Conforming to IEC 60947-1	kV	1.89 (product Ui 690 V), 2.2 (product Ui 1000 V)
Impulse withstand voltage	Conforming to IEC 60947-1	kV	6

Electrical characteristics of power circuit

Relay type			LRD01 …16, LR3D02 …16	LRD05L ...32L	LRD21 …35, LR3D21 …35	LRD313 …365 LR3D 313 …38	LRD313L …365L	LRD3322 …33696 LR3D3322 … 33696	LR2D 3522 … 3563	LRD 4365 … 4369
Tripping class	Conforming to UL 60947-4-1, IEC 60947-4-1		10 A	20	10 A	10 A	20	10 A	20	10 A
Rated insulation voltage (Ui)	Conforming to IEC 60947-4-1	V	690					1000 (11)		
	Conforming to UL, CSA	V	600							600 except **LRD 4369**
Rated impulse withstand voltage (Uimp)		kV	6							
Rated operational voltage (Ue)		V	690							
Frequency limits	Of the operating current	Hz	0…400							
Setting range	Depending on model	A	0.1…13	0.63…32	12…38	9…80	9…65	17…140	17…80	80…140

Auxiliary contact characteristics

Conventional thermal current		A	5					
Max. sealed consumption of the operating coils of controlled contactors (Occasional operating cycles of contact 95-96)	a.c. supply, AC-15	V	120	240	380	480	500	600
		A	3	1.5	0.95	0.75	0.72	0.12
	d.c. supply, DC-13	V	125	250	440			
		A	0.22	0.1	0.06			
Protection against short-circuits	By gG, BS fuses. Maximum rating or by GB2	A	4					

*(1) For relays **LRD01** to **LRD380**, **LRD3322** to **LRD3365**, **LRD04L** to **LRD32L**, **LRD4365** to **LRD4369**, **LRD33656** to **LRD33696.***
*(2) Except for relays **LRD4369**.*
*(3) CCC: Except for **LRD/LR3D04L** to **LRD/LR3D32L**, **LR2D3522** to **LR2D3563**.*
*(4) BV: except for **LRD/LR3D04L** to **LRD/LR3D32L**, **LRD/LR3D313** to **LRD/LR3D380**.*
*(5) DNV-GL: except for **LRD04L** to **LRD32L**.*
*(6) LRoS: except for **LRD/LR3D04L** to **LRD/LR3D32L**, **LRD/LR3D380**.*
*(7) RINA: for **LRD/LR3D01** to **LRD/LR3D35**.*
*(8) RMRS: for **LRD/LR3D313** to **LRD/LR3D380**.*
*(9) EU RO Mutual Recognition: for **LRD/LR3D313** to **LRD/LR3D380**, **LRD313L** to **LRD365L**.*
(10) In case of vibration above 3gn on Deca Green contactor directly mounted with LRD, it is recommended do mount the devices separately by screws on metal plate.
*(11) 750 V for **LRD33656**, **LRD33676**, **LRD33696**.*

Ref.
Overload relays
References: pages B11/4 to B11/7
Dimensions, mounting: pages B11/35 to B11/37
Schemes: page B11/37

Characteristics

Power circuit connection characteristics

Relay type			LRD01 …16, LR3D01 …16	LRD04L ...21L	LRD22L ...32L	LRD21 …35, LR3D21 …35	LRD 313 …365 LR3D 313 …380	LRD 313L …365L	LRD 3322 …33696 LR3D 3322 … 33696	LR2D 3522 …3563	LRD 4365 …4369
Connection to screw clamp terminals											
Flexible cable without cable end	1 conductor	mm²	1.5…10			1.5…10	1…35	1…35	4…35		4…50
Flexible cable with cable end	1 conductor	mm²	1…4		1...6	1…6 except **LRD21:** 1…4	1…35	1…35	4…35		4…35
Solid cable without cable end	1 conductor	mm²	1…6		1.5…10	1.5/10 except **LRD21:** 1/6	1…35	1…35	4…35		4…50
Tightening torque		N.m	1.7		2.5	2.5	1…25: 5 35: 8	1…25: 5 35: 8	9	9	9
Connection to spring terminals (Min/max c.s.a.) (except LRD04L...LRD32L)											
Flexible cable without cable end	1 conductor	mm²	1.5…4	–	–	1.5…4	–	–	–	–	–
Flexible cable with cable end	1 conductor	mm²	1.5…4	–	–	1.5…4	–	–	–	–	–
Connection by bars or lugs			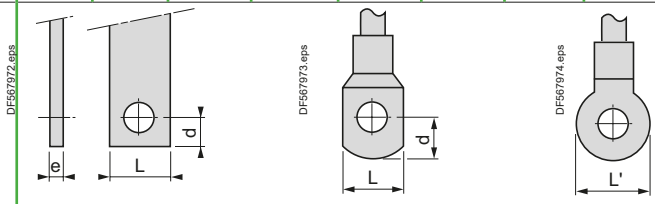								

Relay type			LRD016…166 LRD04L6 … 16L6	LRD216…356 LRD21L6 … 32L6	LRD3136 … 3806	LRD313L6 … 365L6	LRD3322A66 … 3365A66
Pitch	Without spreaders	mm	14.5	17.5	17.5	17.5	21.5
Bars or cables with lugs	e	mm	≤ 6	≤ 6	≤ 6	≤ 6	≤ 6
	L	mm	≤ 8	≤ 8	≤ 13.5	≤ 13.5	≤ 16
	L'	mm	≤ 9.5	≤ 9.5	≤ 16.5	≤ 16.5	≤ 16
	d		≤ 7	≤ 7	≤ 10	≤ 10	≤ 12
Screws			M4	M4	M6	M6	M10
	Tightening torque	N.m	1.7	2.5	6	6	11.3

Control circuit connection characteristics

Connection to screw clamp terminals or spring terminals

Bare cables

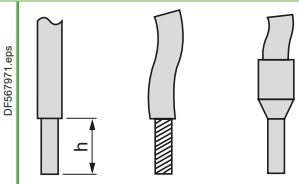

Relay type			LRD01 …16, LR3D01 …16	LRD04L ...21L	LRD22L ...32L	LRD21 …35, LR3D21 …35	LRD 313 …365 LR3D 313 …380	LRD 313L …365L	LRD3322 …33696 LR3D 3322 … 33696	LR2D 3522 … 3563	LRD 4365 …4369
Connection to screw clamp terminals (1)	Solid cable without cable end	mm²	2 x 1…2.5								
	Flexible cable without cable end	mm²	2 x 1…2.5								
	Flexible cable with cable end	mm²	2 x 1…2.5								
Tightening torque		N.m	1.7								
Connection to spring terminals (Min/max c.s.a.) (except LRD04L...LRD32L)	Solid cable	mm²	1…2.5	–		1…2.5			–		
	Flexible cable without cable end	mm²	1…2.5	–		1…2.5			–		

*(1) For relays **LRD313** to **380**: BTR hexagon socket head screws, **Ever**Link® system. In accordance with local electrical wiring regulations, a size 4 insulated Allen key must be used (reference **LADALLEN4**, see page B8/42).*

References: pages B11/4 to B11/7
Dimensions, mounting: pages B11/35 to B11/37
Schemes: page B11/37

Characteristics

Operating characteristics

Relay type			LRD01 …16, LR3D02 …16	LRD04L... LRD32L	LRD21 …35, LR3D21 …35	LRD313 …365 LR3D 313 …380	LRD313L …365L	LRD3322 …33696 LR3D3322 … 33696	LR2D 3522 … 3563	LRD 4365 …4369
Temperature compensation		°C	-20…+60							
Tripping threshold	Conforming to IEC 60947-4-1	A	1.14 ±0.06 Ir							
Sensitivity to phase failure			Tripping current 130 % of Ir on two phases, the third phase at 0.							

Tripping curves

Average operating time related to multiples of the setting current

LRD01 to LRD35, LR2D and LRD3322 to LRD4369

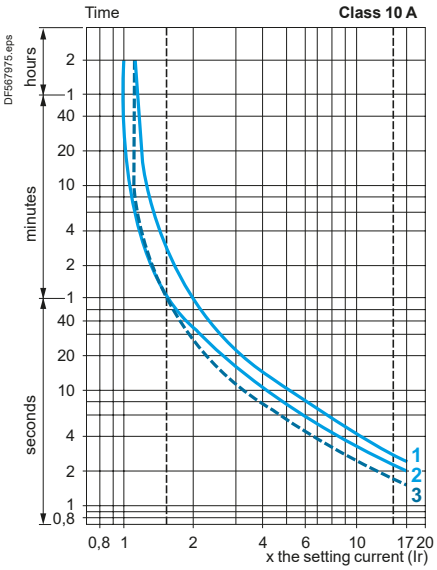

LRD04L to LRD32L and LR2D3522 to LR2D3563

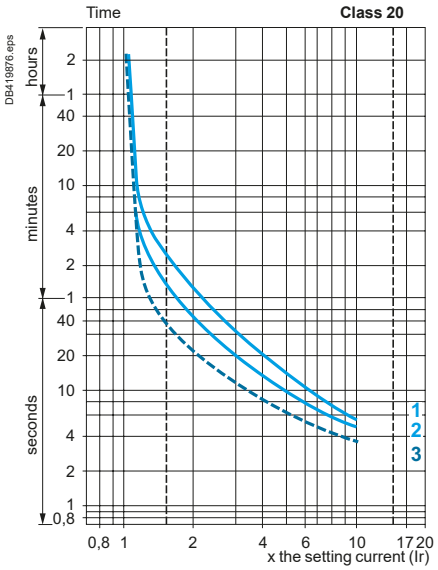

LRD313 to LRD380

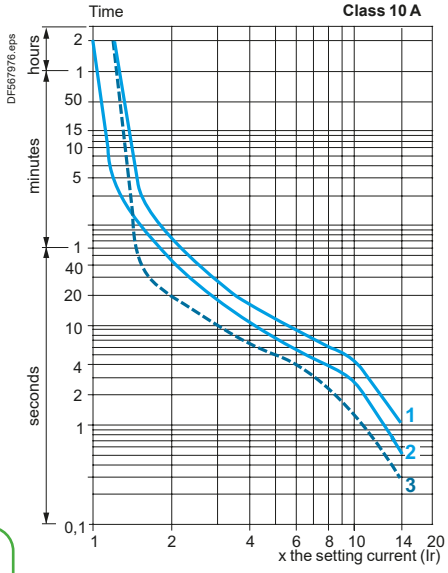

LRD313L to LRD365L

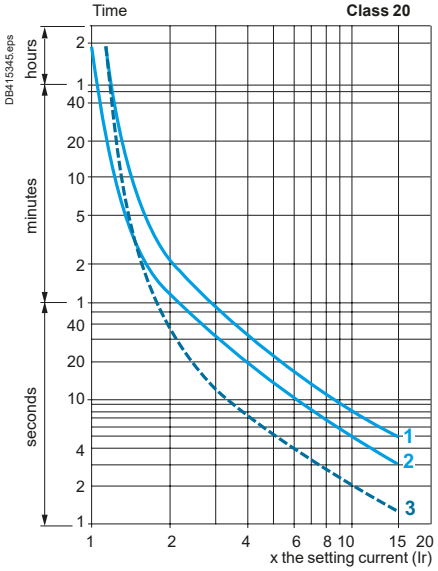

1 Balanced operation, 3-phase, without prior current flow (cold state).
2 2-phase operation, without prior current flow (cold state).
3 Balanced operation, 3-phase, after a long period at the set current (hot state).

References: pages B11/4 to B11/7
Dimensions, mounting: pages B11/35 to B11/37
Schemes: page B11/37

Dimensions, mounting

LRD01…35 (1)

Direct mounting beneath contactors with screw clamp connections

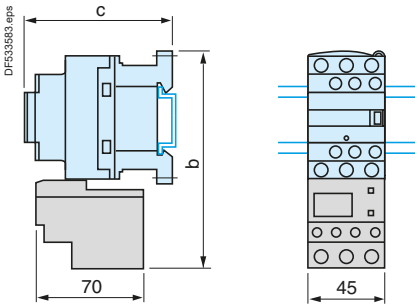

LC1	D09…D18	D25…D38
b	123	137
c	See pages B11/32 and B8/97	

LRD04...32L (1)

Direct mounting beneath contactors with screw clamp connections

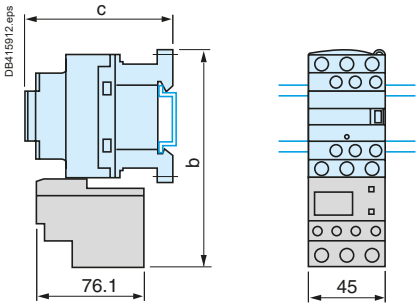

LC1	D09…D18	D25…D38
b	123	137
c	See pages B11/32 and B8/97	

LRD063…223

Direct mounting beneath contactors with spring terminal connections

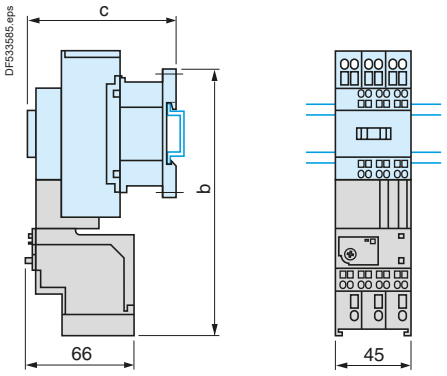

LC1	D093…D253
b	168
c	See pages B11/32 and B8/97

LRD313…380 (1)

Direct mounting beneath contactors LC1D40A…D80A with screw clamp connections or EverLink® connectors

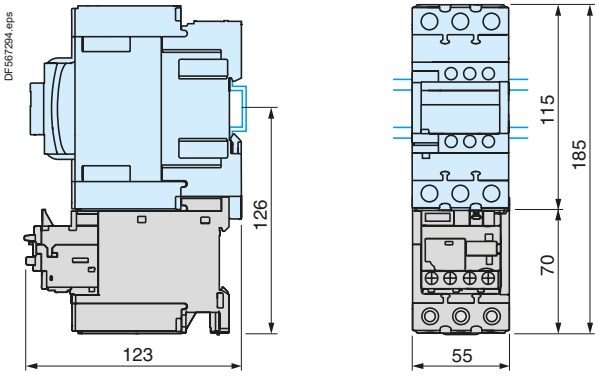

LRD3256…3806 (1)

Direct mounting beneath contactors LC1D40A6…D80A6 with lugs

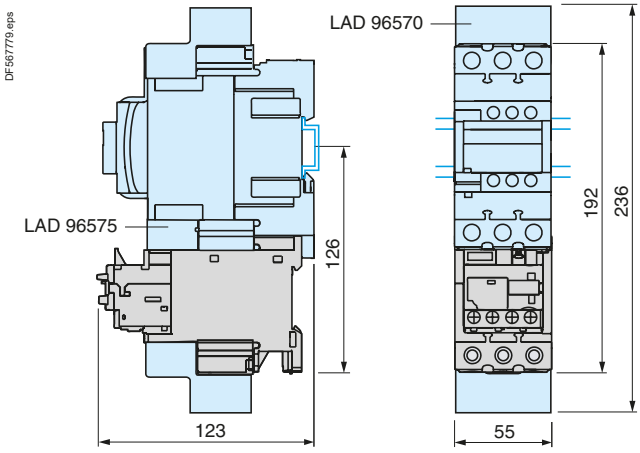

LRD33●●●

Direct mounting beneath contactors LC1D80…D95

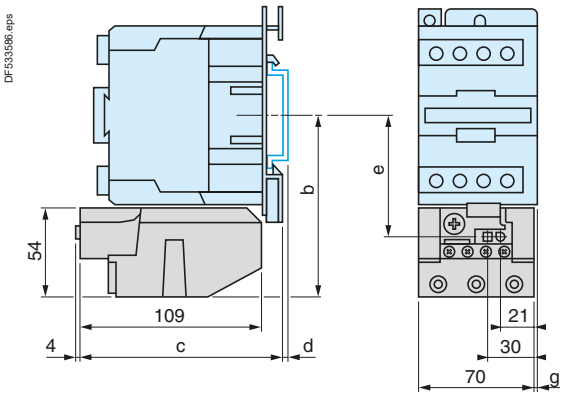

AM1	DL201	DL200
d	7	17

Control circuit AC	b	c	e	g (tri)	g (tetra)
LC1D80	115.5	124	76.9	9.5	22
LC1D95	115.5	124	76.9	9.5	-
Control circuit DC					
LC1D80, D95	115.5	179.4	76.9	9.5	22

(1) In case of vibration above 3 gn on Deca Green contactor directly mounted with LRD, it is recommended do mount the devices separately by screws on metal plate.

Characteristics: pages B11/31 to B11/34
References: pages B11/4 to B11/7
Schemes: page B11/37

Dimensions, mounting

LRD4●●●

Direct mounting beneath contactors LC1D115 and D150

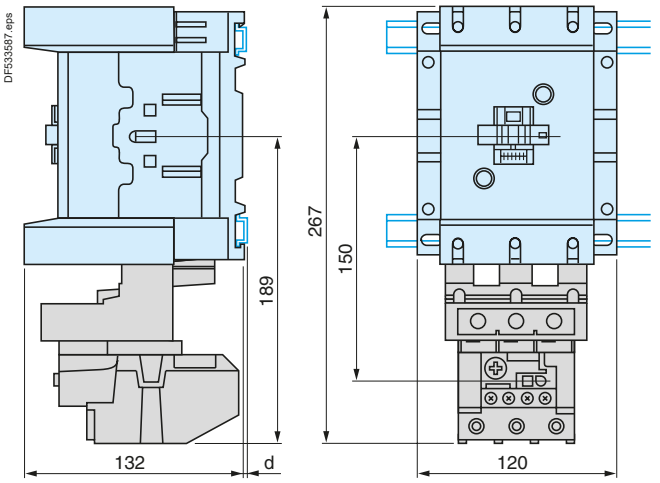

AM1	DL200 and DR200	DE200 and ED●●●
d	2.5	10.5

LRD01…35

Independent mounting on 50 mm centres or on rail AM1DP200 or DE200

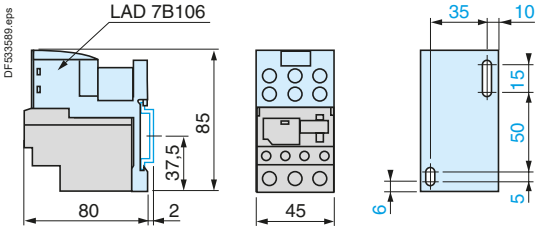

Independent mounting on 110 mm centres

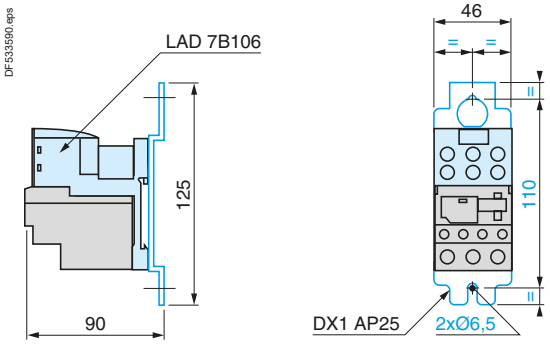

LRD313…380

Mounting on rail AM1D●200 or ED200

With terminal block LAD96560

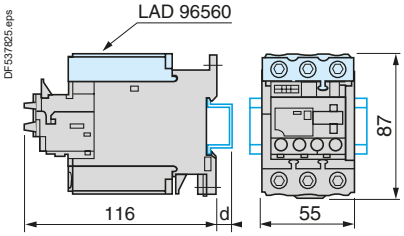

AM1	DP200	DE200	ED200
d	2	9.5	9.5

Panel mounting

Outgoing terminal block not shown

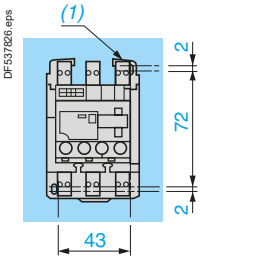

(1) 2 elongated holes Ø 4.2 x 6.

Mounted on plate AM1P

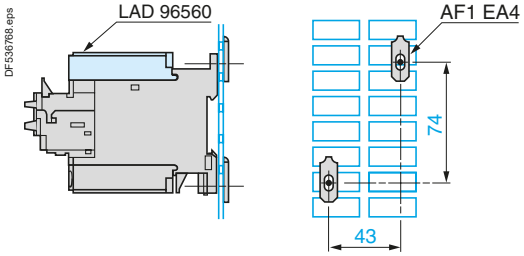

LRD01…35 and LRD313…380

Remote tripping or electrical reset

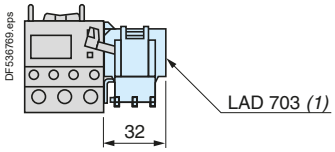

*(1) Can only be mounted on RH side of relay **LRD01**…**35** and **LRD313**…**380** .*

Characteristics:
pages B11/31 to B11/34

References:
pages B11/4 to B11/7

Schemes:
page B11/37

Life Is On Schneider Electric

Dimensions, mounting and schemes

LRD04L...32L

Independent mounting on 50 mm centres or on rail AM1DP200 or DE200

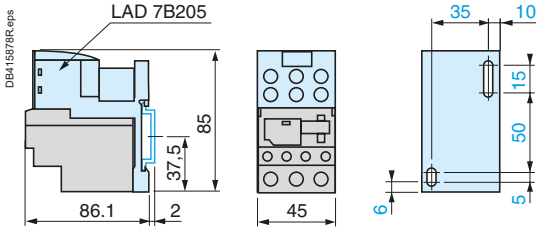

AM1	DP200	DE200
d	2	9.5

Independent mounting on 110 mm centres

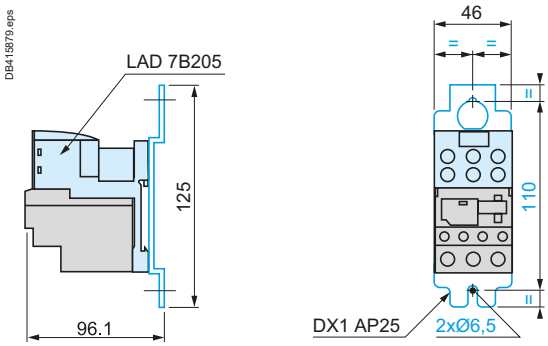

Remote tripping or electrical reset

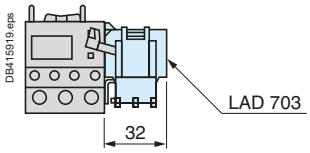

(1) Can be mounted on RH or LH side of relay LR2D15.

LRD3●●● and LR2D35●●

Independent mounting on 50 mm centres or on rail AM1DP200 or DE200

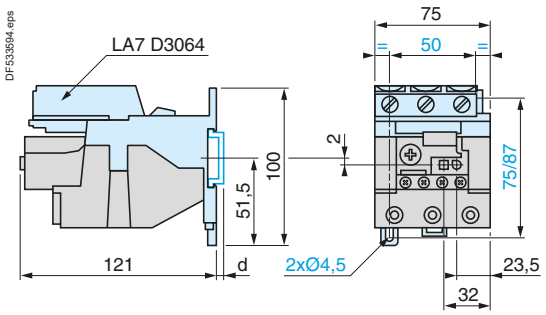

AM1	DP200	DE200
d	2	9.5

LRD3●●●, LR2D35●● and LR9D

Remote tripping or electrical reset

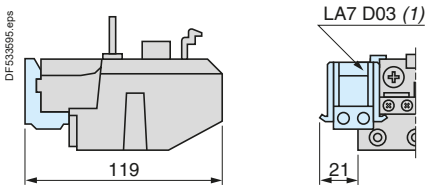

*(1) Can be mounted on RH or LH side of relay **LRD3●●●**, **LR2D35●●** or **LR9D**.*

LRD3●●●

Adapter for door mounted operator

LA7D1020

Stop

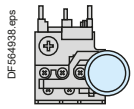

Reset

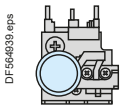

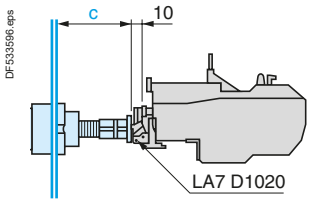

c: adjustable from 17 to 120 mm

LRD, LRD313...380, LRD04...32L

"Reset" by flexible cable

LA7D305 and LAD7305

Mounting with cable straight

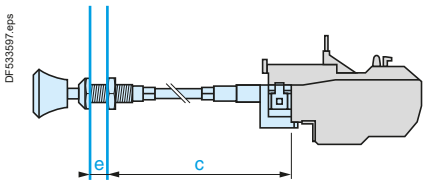

e: up to 20 mm / c: up to 550 mm

Mounting with cable bent

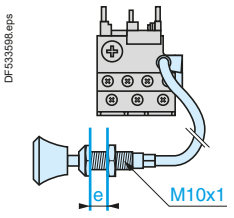

LRD●●, LRD3●● and LR2D●●

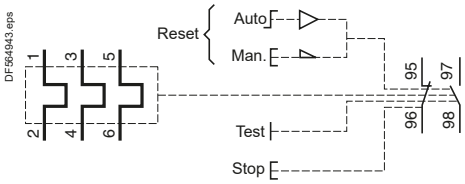

Pre-wiring kit LAD7C1, LAD7C2

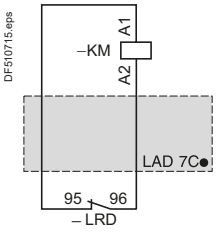

Characteristics:
pages B11/31 to B11/34

References:
pages B11/4 to B11/7

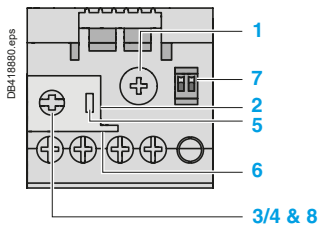

LR9D01...32

Product references LR9D01, 02, 08 and 32

These self-powered electronic thermal overload relays are designed for direct mounting to contactors LC1D09 through LC1D38.

In addition to the protection provided by the Deca thermal overload relays (see page B11/31), they offer the following additional features:
- protection against phase imbalance
- choice of starting class
- protection of unbalanced circuits
- protection of single-phase circuits

1 Adjustment dial Ir.
2 Test button.
3 Stop button.
4 Reset button.
5 Trip indicator.
6 Setting locked by sealing the cover.
7 Class 5/10/20/30 dipswitches.
8 Reset mode selector.

Environment

Relay type			LR9D01, 02, 08, 32
Conforming to standards			IEC/EN 60947-4-1, IEC/EN 60947-5-1, UL 60947-4-1, CSA C22.2 n° 60947-4-1, UL 60947-5-1, CSA C22.2 n° 60947-5-1, GB/T 14048.4
Product certifications			CCC, CSA, UL, CB, UKCA certification
Degree of protection	Conforming to IEC 60529 and VDE 0106		IP 20 on front panel
Ambient air temperature around the device (Conforming to IEC 60255-8)	Storage	°C	-55 to +80
	Normal operation	°C	-25 to +70
Maximum operating altitude	Without derating	m	2000
Operating positions without derating	In relation to normal vertical mounting plane		Any position
Shock resistance	Permissible acceleration conforming to IEC 60068-2-27		15 g (11ms)
Vibration resistance	Permissible acceleration conforming to IEC 60068-2-6		6 g (10-150 Hz)
Dielectric strength at 50 Hz	Conforming to IEC 60947-4-1	kV	6
Surge withstand, common mode	Conforming to IEC 61000-4-5	kV	2
Resistance to electrostatic discharge	Conforming to IEC 61000-4-2	kV	8
Immunity to radiated radio-frequency disturbances	Conforming to IEC 61000-4-3 and NF C 46-022	V/m	10
Immunity to fast transient currents	Conforming to IEC 61000-4-4	kV	2
Electromagnetic compatibility	Draft EN 50081-1 and 2, EN 50082-2		Meets requirements

Electrical characteristics of auxiliary contacts

Conventional thermal current		A	5					
Max. sealed consumption of the operating coils of controlled contactors (Occasional operating cycles of contact 95-96)	a.c. supply, AC-15	V	24	48	110	220	380	600
		VA	100	200	400	600	600	600
	d.c. supply, DC-13	V	24	48	110	220	–	–
		W	100	100	50	45	–	–
Protection against short-circuits	By gG or BS fuses or by circuit breaker **GB2**	A	5					
Cabling Flexible cable without cable end	1 or 2 conductors	mm² (AWG)	1 to 2.5 (18 to 14)					
	Tightening torque	Nm (lb-in)	0.8 (7)					

Ref.
Overload relays

Characteristics

Electrical characteristics of power circuit

Relay type			LR9D01	LR9D02	LR9D08	LR9D32
Tripping class	Conforming to IEC/EN 60947-4-1		5, 10, 20, 30			
	Conforming to UL 60947-4-1, CSA C22.2 n° 60947-4-1		10, 20, 30			
Rated insulation voltage (Ui)	Conforming to IEC 60947-4-1	**V AC**	1000			
Rated operational voltage (Ue)	Conforming to IEC 60947-4-1	**V AC**	690			
	Conforming to UL/CSA	**V AC**	600			
Rated impulse withstand voltage		**kV**	6			
Frequency limits	Of the operating current	**Hz**	50…60			
Setting range		**A**	0.1...0.5	0.4...2	1.6...8	6.4...32
Power circuit connections	Wire size - 1 or 2 conductors	**mm² (AWG)**	1 to 16 (14 to 6)			
	Tightening torque	**Nm (lb-in)**	3.1 (28)			

Operating characteristics

Consumption		**mW**	< 300
Tripping thresholds	Conforming to IEC 60947-4-1	**A**	1.25 In
Sensitivity to phase unbalance	Conforming to IEC 60947-4-1		Phase difference > 40%, tripping in 3 s
Current setting ratio			5:1
Automatic reset time		**min.**	1.5…4

LR9D01, 02, 08, 32 tripping curves

Class 5 Trip curve

Tripping time in seconds

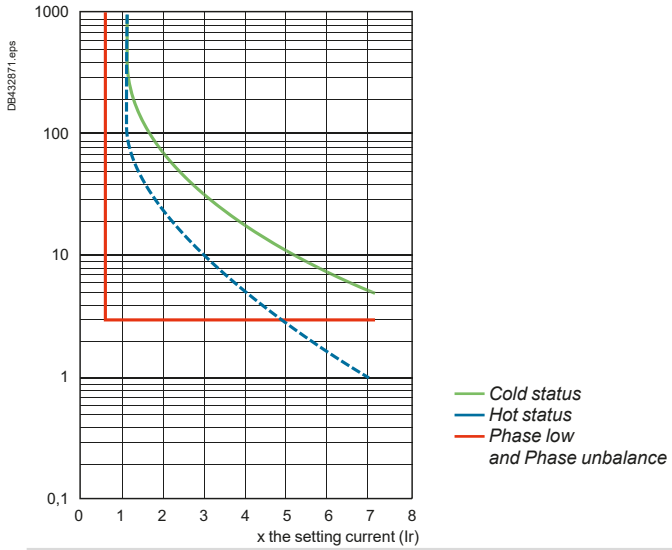

Class 10 Trip curve

Tripping time in seconds

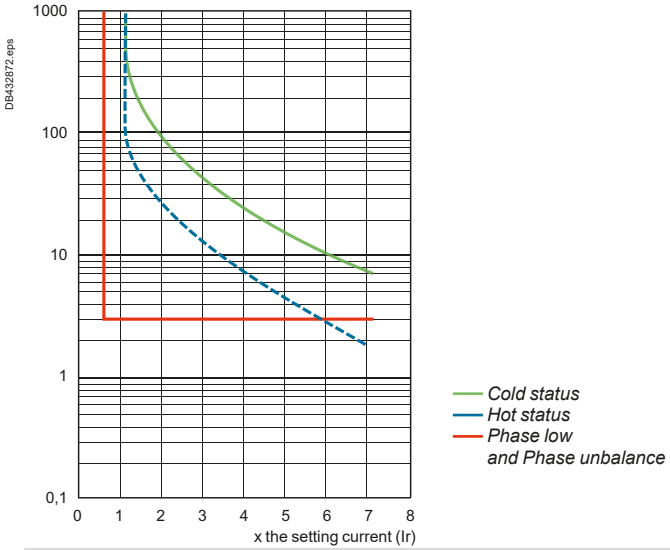

Class 20 Trip curve

Tripping time in seconds

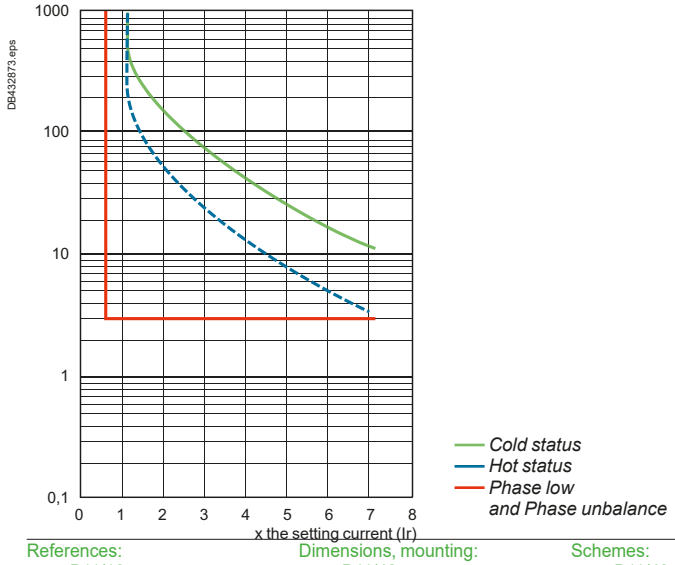

Class 30 Trip curve

Tripping time in seconds

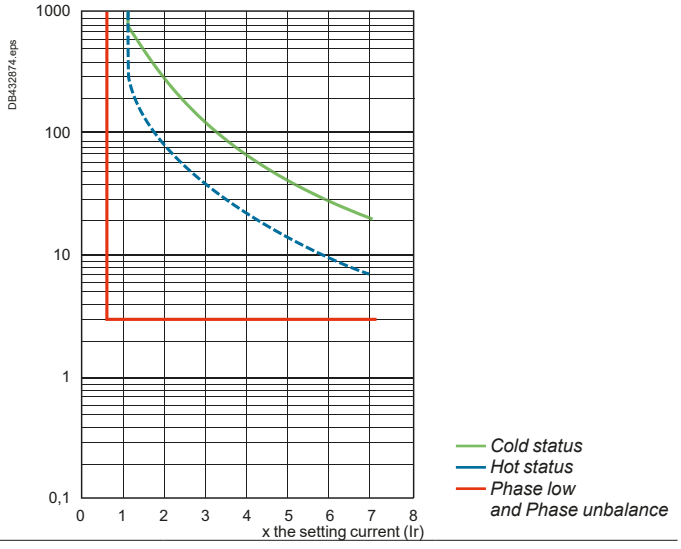

References: page B11/10
Dimensions, mounting: page B11/42
Schemes: page B11/43

Characteristics

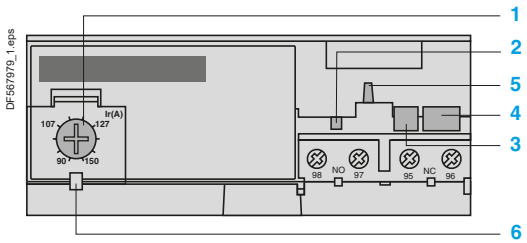

LR9D5367…D5569

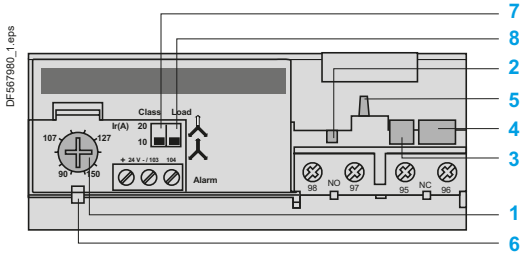

LR9D67 and D69

Description: LR9D5367...LR9D5569, LR9D67, LR9D69

These electronic thermal overload relays are designed for use with contactors LC1D115 and D150.

In addition to the protection provided by Deca thermal overload relays (see page B11/31), they offer the following special features:
- protection against phase imbalance
- choice of starting class
- protection of unbalanced circuits
- protection of single-phase circuits
- alarm function to avoid tripping by load shedding.

1	Adjustment dial Ir.
2	Test button.
3	Stop button.
4	Reset button.
5	Trip indicator.
6	Setting locked by sealing the cover.
7	Class 10/class 20 selector switch.
8	Selector for balanced load /unbalanced load

Environment

Relay type			LR9D5367...LR9D5569, LR9D67, LR9D69
Conforming to standards			IEC/EN 60947-4-1, IEC/EN 60947-5-1, UL 60947-4-1, CSA C22.2 n° 60947-4-1, UL 60947-5-1, CSA C22.2 n° 60947-5-1, GB/T 14048.4
Product certifications			UL, CSA, CCC, ABS, BV, DNV-GL, UKCA
Degree of protection	Conforming to IEC 60529		IP 20 on front panel with protective covers **LA9D11570●** or **D11560●**
Climatic withstand			according to IACS E10
Ambient air temperature around the device (Conforming to IEC 60255-8)	Storage	**°C**	- 40…+ 85
	Normal operation	**°C**	- 20…+ 55 (1)
Maximum operating altitude	Without derating	**m**	2000
Operating positions without derating	In relation to normal vertical mounting plane		Any position
Shock resistance	Permissible acceleration conforming to IEC60028-2-27		13 gn - 11 ms
Vibration resistance	Permissible acceleration conforming to IEC 60068-2-6		2 gn - 5…300 Hz
Dielectric strength at 50 Hz	Conforming to IEC 60947-4-1	**kV**	6
Surge withstand	Conforming to IEC 61000-4-5	**kV**	6
Resistance to electrostatic discharge	Conforming to IEC 61000-4-2	**kV**	8
Immunity to radiated radio-frequency disturbances	Conforming to IEC 61000-4-3	**V/m**	10
Immunity to fast transient currents	Conforming to IEC 61000-4-4	**kV**	2
Electromagnetic compatibility	EN 50081-1 and 2, EN 50082-2		Meets requirements

Electrical characteristics of auxiliary contacts

Conventional thermal current		**A**	5					
Max. sealed consumption of the operating coils of controlled contactors (Occasional operating cycles of contact 95-96)	a.c. supply	**V**	24	48	110	220	380	600
		VA	100	200	400	600	600	600
	d.c. supply	**V**	24	48	110	220	440	–
		W	100	100	50	45	25	–
Protection against short-circuits	By gG or BS fuses or by circuit breaker **GB2**	**A**	5					
Cabling Flexible cable without cable end	1 or 2 conductors	**mm²**	Minimum c.s.a.: 1 Maximum c.s.a.: 2.5					
	Tightening torque	**Nm**	1.2					

(1) For operating temperatures up to 70 °C, please consult your Regional Sales Office.

References: page B11/10
Dimensions, mounting: page B11/42
Schemes: page B11/43

Characteristics

Electrical characteristics of power circuit

Relay type			LR9D5367...LR9D5569, LR9D67, LR9D69
Tripping class	Conforming to IEC/EN 60947-4-1, UL 60947-4-1, CSA C22.2 n° 60947-4-1		10 or 20
Rated insulation voltage (Ui)	Conforming to IEC 60947-4-1	**V**	1000
	Conforming to UL, CSA	**V**	600
Rated impulse withstand voltage (Uimp)		**kV**	8
Frequency limits	Of the operating current	**Hz**	50…60 (1)
Setting range	Depending on model	**A**	60…150
Power circuit connections	Width of terminal lug	**mm**	20
	Clamping screw		M8
	Tightening torque	**N.m**	18

Operating characteristics

Temperature compensation		**°C**	- 20…+70
Tripping thresholds	Conforming to IEC 60947-4-1		
	Alarm	**A**	1.05 ±0.06 In
	Trip	**A**	1.12 ±0.06 In
Sensitivity to phase failure	Conforming to IEC 60947-4-1		Tripping in 4 s ±20 % in the event of phase failure

Alarm circuit characteristics

Rated supply voltage	d.c. supply	**V**	24
Supply voltage limits		**V**	17…32
Current consumption	No-load	**mA**	≤ 5
Switching capacity		**mA**	0…150
Protection	Short-circuit and overload		Self protected
Voltage drop	Closed state	**V**	≤ 2.5
Cabling	Flexible cable without cable end	**mm²**	0.5…1.5
Tightening torque		**N.m**	0.45

(1) For other frequencies and for applications involving the use of these overload relays with soft starters or variable speed drives, please consult your Regional Sales Office.

LR9D5367...LR9D5569, LR9D67, LR9D69 tripping curves

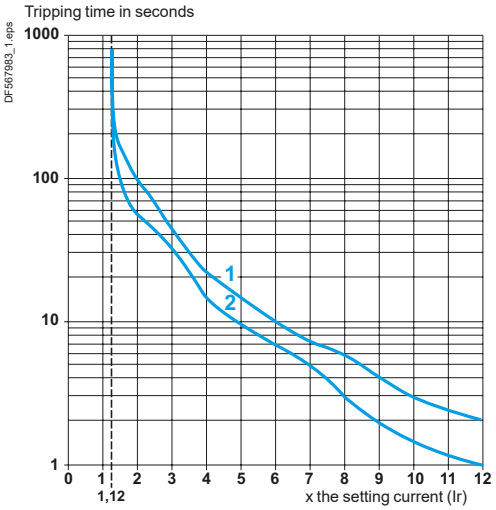

Average operating time related to multiples of the setting current

1 Cold state curve
2 Hot state curve

References: page B11/10
Dimensions, mounting: page B11/42
Schemes: page B11/43

Dimensions, mounting

LR9D01, 02, 08, 32

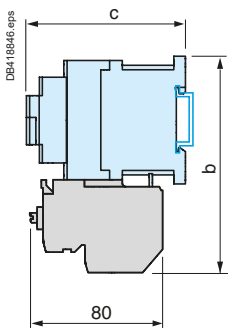

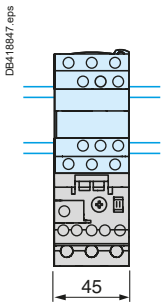

LC1	D09...D18	D25...D38
b	130	140
c	See pages B8/65 and B8/66	

LR9D01...32

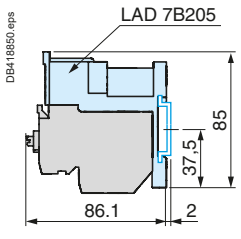

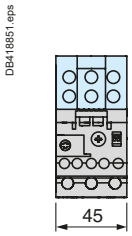

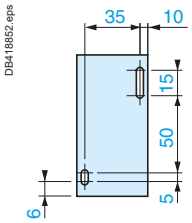

LR9D53●●, LR9D55●●, LR9D67, LR9D69

Direct mounting beneath contactors LC 1D115 and D150

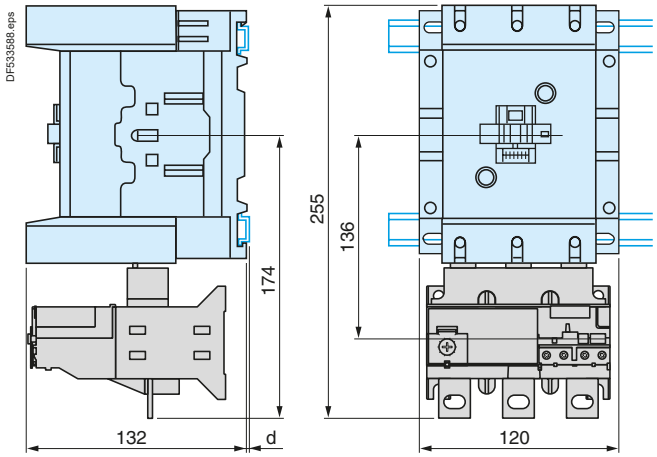

AM1	DP200 and DR200	DE200 and ED●●●
d	2.5	10.5

LR9D

"Reset" by flexible cable

LA7D305 and LAD7305

Mounting with cable straight

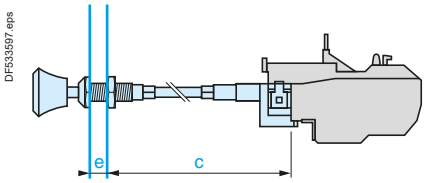

e: up to 20 mm / c: up to 550 mm

Mounting with cable bent

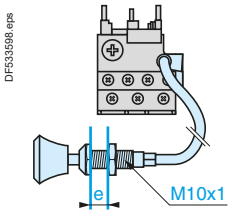

e: up to 20 mm

Ref.
Overload relays

Schemes

LR9D01, 02, 08, 32

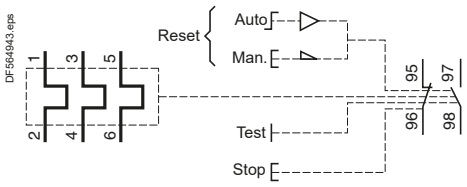

LR9D01, 02, 08, 32, LR9 D110S

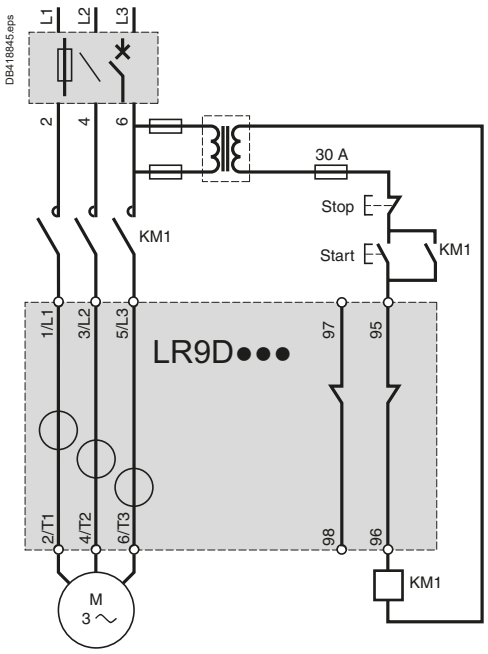

LR9D5●●●

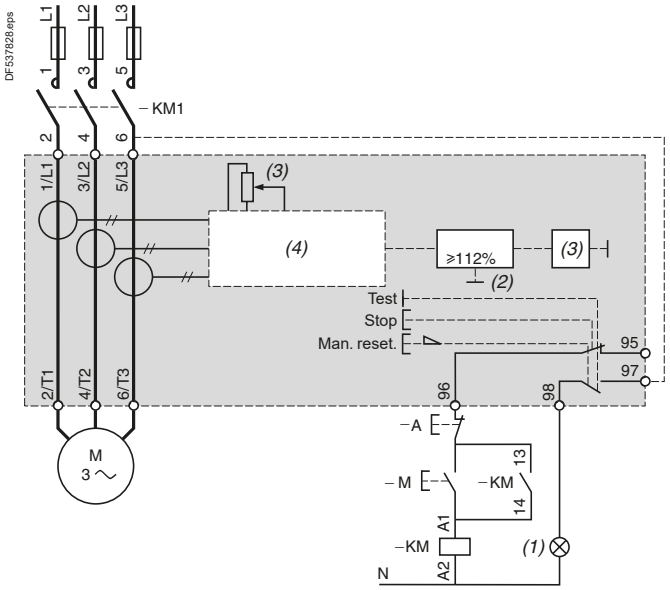

(1) Tripped.
(2) Overload.
(3) Setting current.
(4) Specialised circuit.

LR9D67 and LR9D69

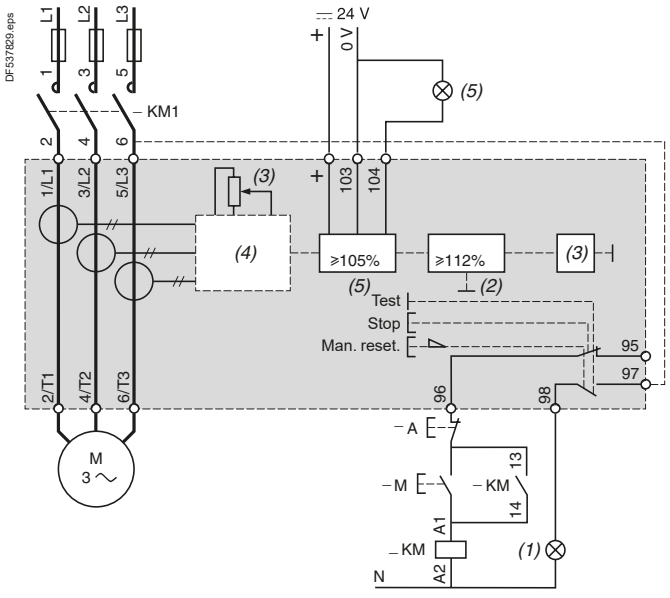

(1) Tripped.
(2) Overload.
(3) Setting current.
(4) Specialised circuit.
(5) Alarm.

References:
page B11/10

Characteristics:
pages B11/38 to B11/41

Dimensions:
page B11/42

Characteristics

Environment

Contactor type			LR9G115	LR9G225	LR9G500	LR9G630
Conforming to standards			IEC/EN 60947-4-1, IEC/EN 60947-5-1, UL 60947-4-1, CSA C22.2 n° 60947-4-1, UL 60947-5-1, CSA C22.2 n° 60947-5-1, GB/T 14048.4			
Product certifications			CB Scheme, CCC, cULus, UKCA, ATEX, EU-RO-MR by DNV			
Degree of protection	Conforming to IEC 60529 / VDE 0106		IP 20 on front of relay with accessories LA9G37●●			
Climatic withstand			according to IACS E10			
Ambient air temperature around the device (conforming to IEC 60255-8)	Storage	**°C**	-55...+80			
	Normal operation	**°C**	-25…+60			
Maximum operating altitude	Without derating	**m**	3000			
Net weight		**kg**	1.2		1.7	2.8
Operating positions without derating	In relation to normal vertical mounting plane		Any position			
Shock resistance 11 ms	Permissible acceleration conforming to IEC 60068-2-7		15 gn			
Vibration resistance 5 to 300 Hz	Permissible acceleration conforming to IEC 60068-2-6		6 gn			
Rated impulse withstand voltage (Uimp)	Conforming to IEC 60947-4-1	**kV**	8			
Surge withstand	Conforming to IEC 61000-4-5	**kV**	4			
Resistance to electrostatic discharge	Conforming to IEC 61000-4-2	**kV**	8 (in air) 6 (in direct mode)			
Resistance to radiated radio-frequency disturbance	Conforming to IEC 61000-4-3	**V/m**	20			
Resistance to fast transient currents	Conforming to IEC 61000-4-4	**kV**	4			
Electromagnetic compatibility	EN 50081-1 and 2, EN 50082-2		Conforming			

Characteristics

Power circuit - Electrical characteristics

Relay type			LR9G115	LR9G225	LR9G500	LR9G630
Rated insulation voltage (Ui)	Conforming to IEC 60947-4-1 Over-voltage category III, degree of pollution: 3	**V**	1000			
Rated impulse withstand voltage (Uimp)	Conforming to IEC 60947-1	**kV**	8			
Rated operational current (Ie)		**A**	28 to 630			
Short-circuit protection and coordination			See pages A5/7 to A5/8, A5/23 to A5/26 and A5/38 to A5/39.			
Frequency limits of the operating current		**Hz**	50 / 60			
Power circuit connections	Width of terminal lug	**mm**	18	18	30	48
	Clamping screw		M8	M8	M10	M12
	Tightening torque	**N.m**	18	18	35	58

Auxiliary contact electrical characteristics

Conventional thermal current		**A**	5						
Short-circuit protection	By gG fuses	**A**	6						
Connection (Push-in type)			**Min.**	**Max.**					
Flexible cable	1 conductor with cable end	**mm²**	0.25	2.5					
	2 conductors with Dual Sleeve	**mm²**	0.5	1					
Solid cable	1 conductor	**mm²**	0.2	2.5					
	Stripping length	**mm**	10	10					
Rated operational contact power	a.c. supply AC-15	**V**	**24**	**48**	**120**	**240**	**380**	**480**	**500**
		A	4	4	3	1.5	0.95	0.75	0.72
		VA	96	192	360	360	361	360	360
	d.c. supply DC-13	**V**	**24**	**48**	**125**	**250**	**–**	**–**	**–**
		A	2	0.7	0.22	0.11	–	–	–
		W	48	33.6	27.5	27.5	–	–	–
Maximum operational voltage	a.c., category AC-15	**V**	500	500	500	500	500	500	500
	d.c., category DC-13	**V**	250	250	250	250	250	250	250

Overload relays

Introduction: pages B11/11 to B11/12
References: pages B11/13 to B11/14
Dimensions: page B11/47

Characteristics

Operating characteristics

Tripping class	Conforming to IEC 60947-4-1			5E/10E/20E/30E
Operating temperature			°C	-40…+60 (1)
Reset				auto and manual
Trip alarm and fault indication				On front of relay
Test function				On front of relay
Tripping thresholds	Conforming to IEC 60947-4-1	Alarm		≥ 90% of permissible thermal state
		Tripping	A	1.2 ± 0.05 Ir
Sensitivity to phase loss	Conforming to IEC 60947-4-1			Tripping in 4 s ± 1 s in the event of phase loss
Phase imbalance	Conforming to IEC 60947-1			Tripping in 5 s ± 1 s if imbalance ratio ≥ 40 % according to Annex T5.5
Ground fault	Conforming to IEC 60947-4-1			Ig = 0.75 Ir Tripping 1 s ± 20 % if I ≥ 1.1 Ig
Adjustment (nominal motor current)				Setting dial on front of relay (64 settings)
Security sealing				Yes

(1) Adjustment of dial setting(s): -25...+60 °C.

LR9G tripping curves

Average operating times depending on multiples of the setting current

Class 5E

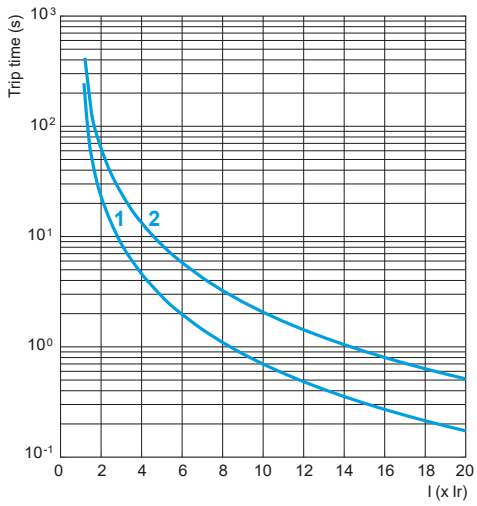

1 Hot state
2 Cold state

Class 10E

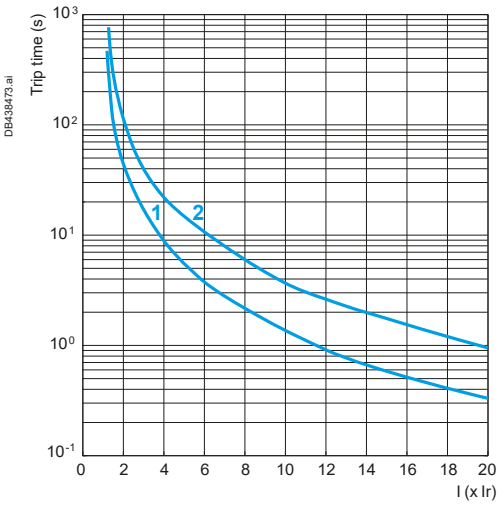

1 Hot state
2 Cold state

Class 20E

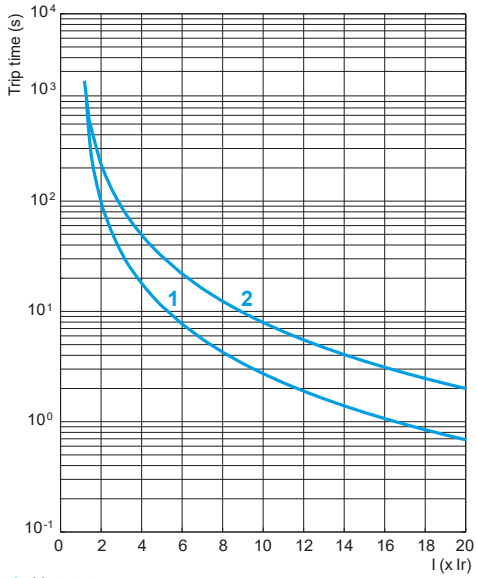

1 Hot state
2 Cold state

Class 30E

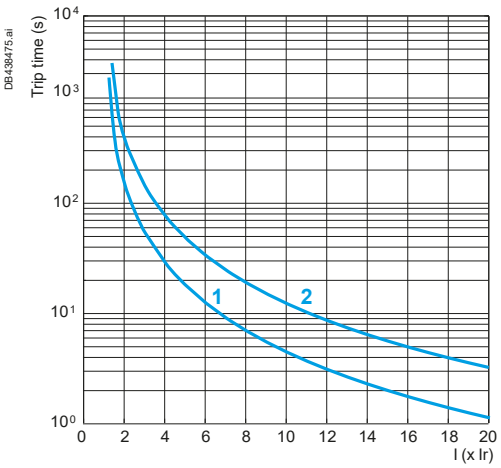

1 Hot state
2 Cold state

Introduction:
pages B11/11 to B11/12

References:
pages B11/13 to B11/14

Dimensions:
page B11/47

Life Is On Schneider Electric

Dimensions and diagram

Dimensions

LR9G115...630

DB438399.ai

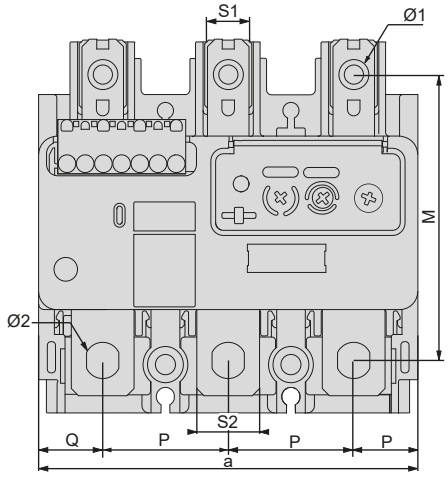

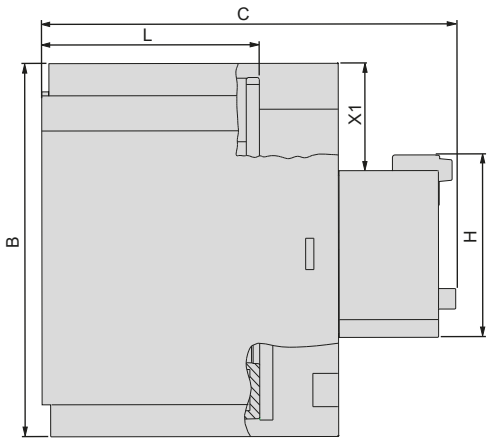

DB438402.ai

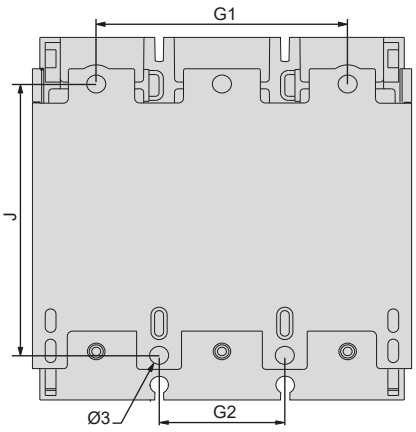

LR9G	115-225	500	630
a	105.7	140	210
b	109.55	115.65	149.45
c	126.2	139.2	185.9
G1	70	119.3	186.2
G2	35	45	70
J	80.1	68.25	86
M	78	83	100
H	52	52	52
L	66	79	107
P	35	45	70
Q	18	25	35
S1	11.5	22.5	22.5
S2	17.5	30.5	50
Ø1	8.3	10.6	13
Ø2	9	10.6	13
Ø3	5.3	5.3	8.5
X1	30	33	50

Diagram

DB438512.ai

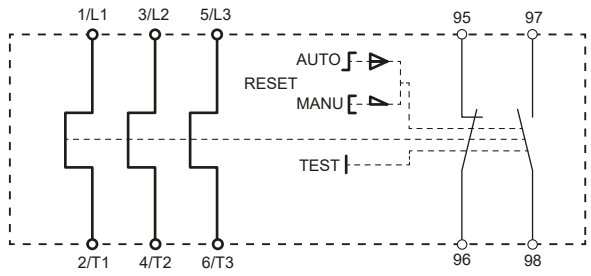

Introduction:
pages B11/11 to B11/12

References:
pages B11/13 to B11/14

Characteristics:
pages B11/44 to B11/46

Characteristics

Introduction

The RM1XA electromagnetic relay detects over current peaks in excess of the maximum permissible current value. It is designed for the protection of circuits which are not subject to current peaks (starters, resistors) or for controlling starting peaks on slip ring motors.

It trips instantaneously and is not suitable for frequent operation (12 operating cycles per hour). It can withstand a continuous current equivalent to 1.25 times the minimum setting current.

Environment characteristics

Conforming to standards		IEC/EN 60947-4-1
Product certifications		UKCA
Ambient air temperature around the device	**°C**	Storage: - 60…+ 70 Operation: - 40…+ 60
Maximum operating altitude	**m**	2000
Operating position		± 15° in relation to normal vertical mounting position

Electrical characteristics of power circuit

Maximum rated operational voltage	**V**	∼ or ⎓ 600
Frequency limits of the rated operational current	**Hz**	0…60

Electrical characteristics of auxiliary contacts

Conventional thermal current			**A**	10				
Occasional making and breaking capacities	a.c. supply	Voltage	**V**	48	110	220	380	600
		Power (1)	**VA**	4000	12 000	17 000	22 000	–
	d.c. supply	Voltage	**V**	48	110	220	440	600
		Power (2)	**W**	240	200	190	180	180

(1) Circuit such as the electromagnet of a contactor - cos φ inrush: 0.7 and cos φ sealed: 0.4.
(2) Circuit such as an electromagnet without economy resistor ; time constant varying from 20 ms for 5 W to 200 ms for 100 W or more.

Operating times

Operating times: because of the numerous applications for RM1 XA over current relays, it is not possible to give precise operating times. The curves shown are therefore purely indicative.

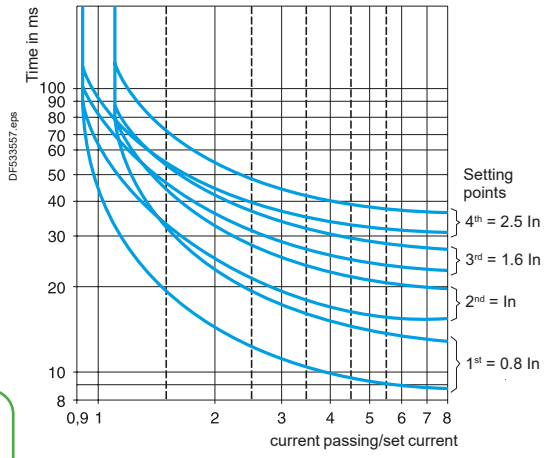

Ref.
Overload relays

Dimensions, schemes

Dimensions

RM1XA●●●, RM1XA●●●1

Common side view

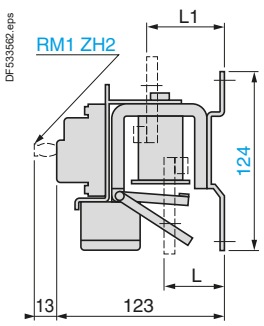

RM1XA001…XA040

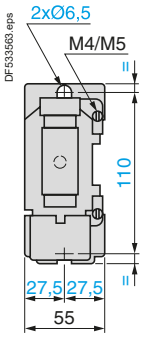

RM1XA100, RM1XA315 and RM1XA351

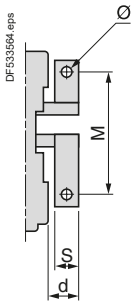

RM1XA160, RM1XA500

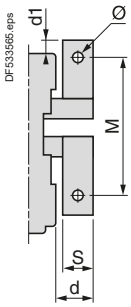

RM1XA●●●1 with electrical reset ER1XA2●

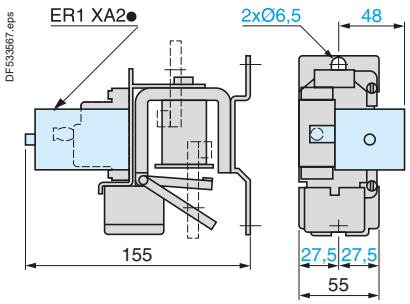

RM1	d	d1	M	L	L1	S	Ø
XA100	20.5	–	87	25	40	20	M8
XA160	27.5	5.5	94	25	40	25	M8
XA315	35.5	–	74	44	55	30	M10
XA500	40.5	7	84	44	55	40	M10

Schemes

RM1XA●●●1

Latching

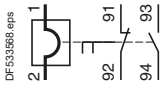

RM1XA●●●

Non-latching

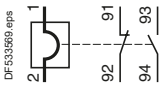

RM1XA

3-wire control (without mechanical latching)

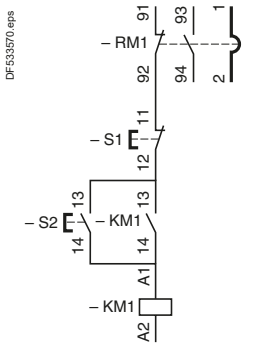

2-wire control (with mechanical latching)

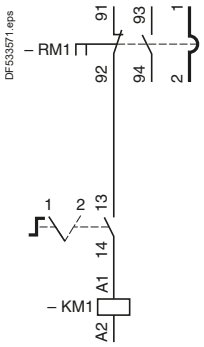

3-wire control (with “trip” signal)

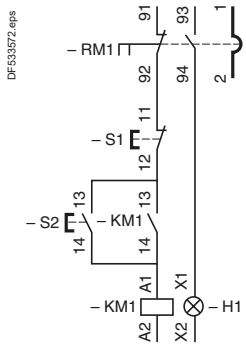

References:
pages B11/15 and B11/16

Characteristics:
page B11/48

Application

LT3S● thermistor protection units continuously monitor the temperature of the machines to be protected (motors, generators, etc.) by means of PTC thermistor probes embedded in the machine windings.

If the nominal operating temperature of the probes is reached, they convert the rapid increase in resistance into a switching function which can be used to switch off the machine or signal a fault (see paragraph relating to thermistor probes below).

Accidental breaks in the supply circuits of the thermistors are also detected.

Electromagnetic compatibility

Conforming to “Electromagnetic compatibility” directive.
Conforming to standard IEC/EN 61000-6-2.

Resistance to electrostatic discharge (conforming to IEC 61000-4-2)	**Level 3**
Resistance to fast transients (conforming to IEC 61000-4-4)	**Level 3**
Susceptibility to electromagnetic fields (conforming to IEC 61000-4-3)	**Level 3**
Surge resistance 1.2/50 - 8/20 (conforming to IEC 61000-4.5)	**Level 4**
Immunity to microbreaks and voltage drops (IEC 61000-4-11)	
Suitable for use with variable speed controllers	

Thermistor probes

Range of most commonly used PTC thermistor probes:
from 90 to 160 °C, in steps of 10 °C.
Curve R = f (θ), characteristic of a PTC thermistor probe, is defined by standard IEC 60947-8.

The choice of PTC thermistor probe to be incorporated in the motor winding depends on the insulation class, the type of motor and the most suitable location for the probe. This choice is usually made by the motor manufacturer or the motor rewinder, who have all the necessary information.

Application example

Insulation class of rotating machines conforming to IEC 60034-11 (S1 duty)	NOT Nominal operating temperature	Temperature at which rapid increase in resistance occurs Probes used for Alarm	Fault
	°C	**°C**	**°C**
A	100	100	100
B	110	110	120
E	120	120	130
F	140	140	150
H	160	160	170

(1) PTC: Positive Temperature Coefficient.

Ref.
Overload relays

References:
pages B11/17 and B11/18
Dimensions, schemes:
pages B11/54 and B11/55

Characteristics

Protection unit type				LT3SE	LT3SA	LT3SM
Reset method				Automatic	Automatic	Manual/Automatic
Fault indication				–	On front panel of unit and remote	On front panel of unit and remote
Fault test				–	–	By pushbutton on front panel of unit
Probe interchangeability				Label "Mark A" to IEC 60034-11	Label "Mark A" to IEC 60034-11	Label "Mark A" to IEC 60034-11
Environment						
Conforming to standards				IEC 60947-8	IEC 60947-8	IEC 60947-8
Product certifications				UL, CSA		
Degree of protection				IP 20 conforming to IEC 60529		
CE marking				LT3S● protection units have been designed to comply with the basic recommendations of European directives relating to low voltage and EMC. Therefore LT3S● products bear the European Community CE mark.		
Ambient air temperature around the device	Storage Conforming to IEC 60068-2-1 and 2-2		°C	- 40…+ 85		
	Operation		°C	- 25…+ 60		
Maximum operating altitude	Without derating			2000 m		
	With derating			Up to 3000 m, the maximum permissible ambient air temperature for operation (60 °C) must be reduced by 5 °C per additional 500 m above 1500 m		
Vibration resistance	Conforming to IEC 60068-2-6			2.5 gn (2…25 Hz) 1 gn (25…150 Hz)		
Shock resistance	Conforming to IEC 60068-2-27			5 gn (11 ms)		
Operating positions without derating	In relation to normal vertical mounting plane			Any position		
Power supply circuit characteristics						
Rated control circuit voltage (Uc)	∼ 50/60 Hz	Single voltage	V	115 or 230	–	400
	0.85…1.1 Uc	Dual voltage	V	–	115/230	115/230. 24/48
	∼ 50/60 Hz 0.85…1.1 Uc	Multivoltage	V	–	24…230	24…230
	⎓	Single voltage	V	24	–	–
	0.8…1.25 Uc	Dual voltage	V	–	24/48	24/48
	0.85…1.1 Uc	Multivoltage	V	–	24…230	24…230
Average consumption	Sealed	∼	VA	< 2.5	< 2.5	< 2.5 except (400 V: 2.7)
		⎓	W	< 1	< 1	< 1

(1) PTC: Positive Temperature Coefficient.

References:
pages B11/17 and B11/18

Dimensions:
page B11/54

Schemes:
pages B11/54 and B11/55

Characteristics

Control circuit characteristics

Protection unit type			LT3SE	LT3SA	LT3SM
Resistance	Tripping	Ω	2700…3100	2700…3100	2700…3100
	Reset	Ω	1500…1650	1500…1650	1500…1650
Maximum number of probes fitted in series (2)	Probes ⩽ 250 Ω at 25°		6	6	6
Voltage at terminals in the thermistor circuit	Normal operation (R = 1500 Ω)	**V**	< 2.5	< 2.5	< 2.5
	Conforming to IEC 60034-11 (R = 4000 Ω)	**V**	< 7.5	< 7.5	< 7.5
Thermistor probe short-circuit detection	Operating threshold	Ω	–	< 20	< 20
Connection of probes to the LT3	Distance	**m**	300	400	500	1000 (3)
	Minimum c.s.a. of conductors	**mm²**	0.75	1	1.5	2.5

Electrical characteristics of the output relay contacts

Contact type	Single voltage or dual voltage		1 N/C	1 N/C + 1 N/O	1 N/C + 1 N/O
	Multivoltage		–	2 C/O	2 C/O
Rated insulation voltage		**V**	∼ 500		
Maximum operational voltage		**V**	∼ 250 (∼ 400 V for **LT3SM00V**)		
Rated impulse withstand voltage	Uimp	**kV**	2.5		
Conventional thermal current		**A**	5		
Operational power	At 220 V	**VA**	100 for 0.5 million operating cycles		
Breaking capacity	In cat. AC-15 120 V	**A**	6		
	250 V	**A**	3		
	In DC-13 24 V	**A**	2		
Cabling (cage type connector) for flexible or solid cable	Without cable end	**mm²**	2 x 1…1 x 2.5		
	With cable end	**mm²**	1 x 0.75…2 x 2.5		
Tightening torque		**N.m**	0.8		

Thermistor probe characteristics

Probe type			DA1TT●●●	DA1TS●●●
Conforming to standards			IEC 60034-11. Mark A	
Resistance	At 25 °C	Ω	3 x 250 in series	250
Rated operational voltage (Ue)	Per probe	**V**	⎓ 2.5 V max	⎓ 2.5 V max
Rated insulation voltage (Ui)		**kV**	2.5	1
Insulation			Reinforced	Reinforced
Length of connecting cables	Between probes	**mm**	250	–
	Between probe and motor terminal plate	**m**	1	1

(1) PTC: Positive Temperature Coefficient.
(2) Provided that the total resistance of the probe circuit is less than 1500 Ω at 20 °C.
(3) For distances greater than 500 m take cabling precautions (twisted shielded pairs).

Ref.
Overload relays

References: pages B11/17 and B11/18
Dimensions: page B11/54
Schemes: pages B11/54 and B11/55

LT3S protection unit/thermistor probe combination

Guaranteed operating zones: examples with 3 probes type DA1TT●●● (250 Ω at 25 °C) in series, conforming to standard IEC 60034-11, Mark A.

LT3SE, LT3SA, LT3SM protection units

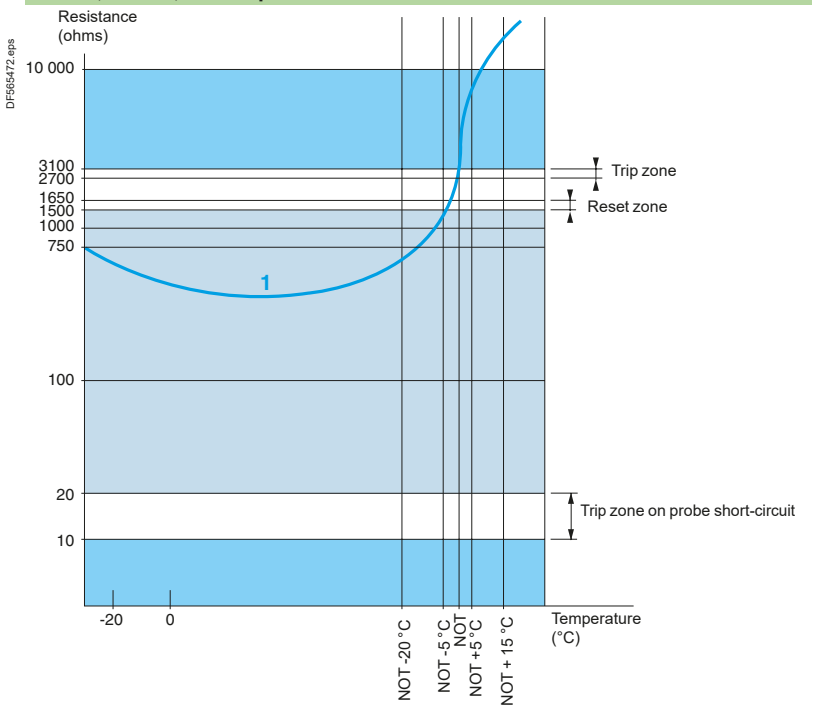

1 3 probes type DA1TT●●● (250 Ω at 25 °C) in series.

NOT: Nominal Operating Temperature

Protection unit tripped.

Protection unit reset.

(1) PTC: Positive Temperature Coefficient.

References:
pages B11/17 and B11/18

Dimensions:
page B11/54

Schemes:
pages B11/54 and B11/55

Dimensions

LT3SE, SA, SM

Mounting on ⊥ rail AM1 DP200

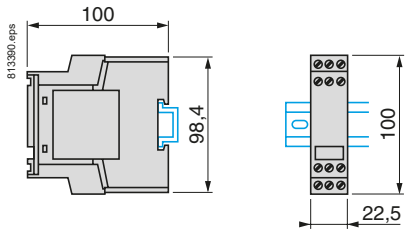

Mounting on 1 ⊏ rail
(with adapter RHZ 66)

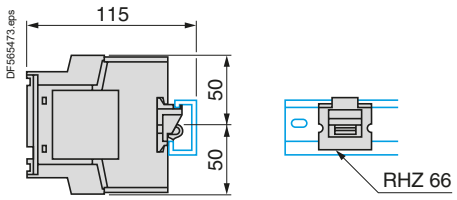

Schemes for "no fault" operation

LT3SE00BD (24 V DC), LT3SE00F (115 V AC), LT3SE00M (230 V AC)

Without fault memory

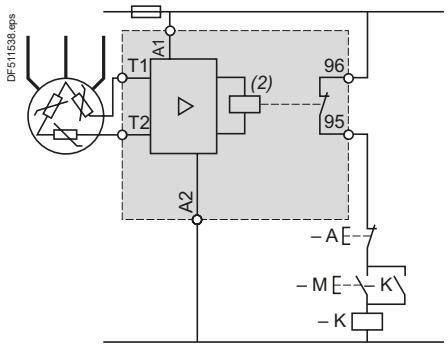

LT3SA00ED (24/48 V DC), LT3SA00M (115/230 V AC)

Refer to chart for use of A1/B1 terminal according power supply

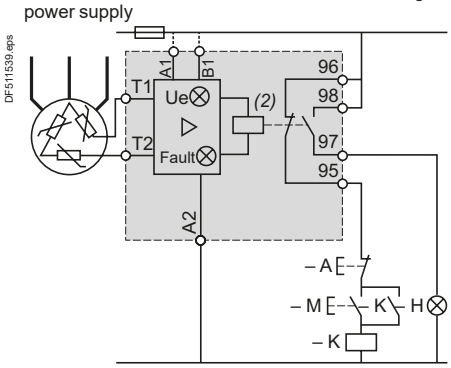

LT3SA00MW (24 to 230V AC/DC)

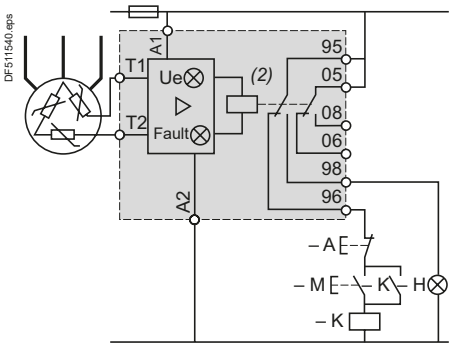

LT3SM00E (24/48V AC), LT3SM00ED (24/48V DC), LT3SM00M (115/230 V AC), LT3SM00V (400V AC)

Refer to chart for A1 - A2 - B1 supply terminals to be used

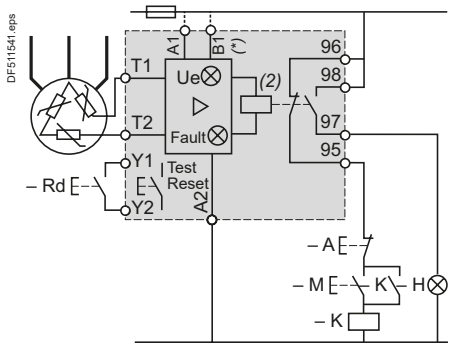

LT3SM00MW (24 to 230 V AC/DC)

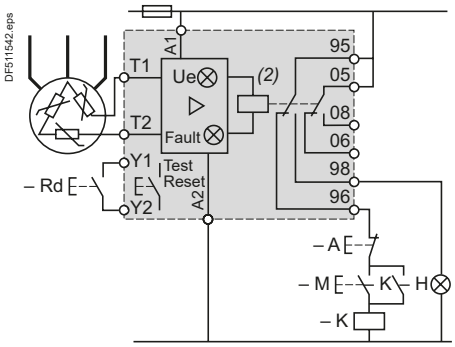

*(*) no B1 terminal on **LT3SM00V** (400V AC).*

LT3SA, LT3SM - dual voltage and 400 V - power terminal assigment

LT3SA00ED, LT3SM00ED	**24 V DC**	**48 V DC**
Terminals	B1(+) A2 (0V)	A1(+) A2 (0V)
LT3SA00M, LT3SM00M	**115 V AC**	**230 V AC**
Terminals	A1-B1	A1-A2
LT3SA00M, LT3SM00M	**-**	**400 V AC**
Terminals	-	A1-A2

Setting-up

Cabling

It is inadvisable to use the same multi-core cable for the thermistor probe circuit and the power circuit. This is especially important for long cable runs.
If it is impossible to comply with the above recommendation, a pair of twisted conductors must be used for the thermistor probe circuit.

Testing the insulation of the line connecting the thermistors to the LT3S unit

Before carrying out this test, short-circuit all the terminals of the LT3S protection unit.
Measure the insulation value between these terminals and earth using a megger or a flash tester, progressively increasing the voltage to the value defined by the standards.

Checking the PTC thermistor probes for correct operation

With the machine stopped, in the cold state and after having taken all the necessary safety precautions:
- disconnect the line linking the thermistors to the LT3S protection unit, at the terminals of the machine being protected: motor, etc.,
- using an ohmmeter with a voltage rating less than or equal to 2.5 V, measure the resistance of the probe circuit at the machine terminals,
- depending on the number and type of thermistors connected in series, check that their resistance value at 25 °C is correct.

Example: motor fitted with 3 PTC thermistor probes with a resistance ≤ 250 Ω at 25 °C.
Any value higher than 250 x 3 = 750 Ω indicates a problem.

(1) PTC: Positive Temperature Coefficient.
(2) Relay energised: the contacts are shown in the "operating" position.

References:
pages B11/17 and B11/18

Characteristics:
pages B11/50 to B11/53

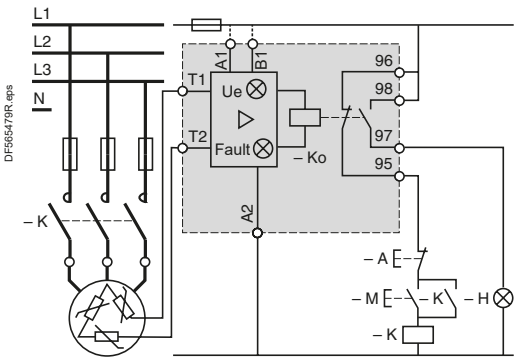

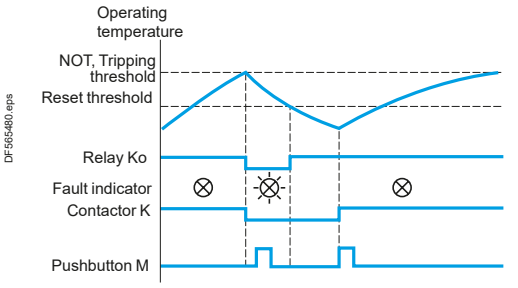

LT3SA protection units

Starting

The LT3SA is normally energised and its internal relay is in the pre-energised position.
The motor is started by operating pushbutton M automatically held in by K (3-wire control circuit).

Thermal fault

The strong increase in resistance of the PTC probes at the moment their temperature reaches the nominal operating temperature (NOT) is detected by the LT3SA unit and causes the relay to drop out; indicator H comes on, as does the built-in indicator on unit LT3SA.
Contactor K drops out and pressing button M has no effect.

Reset

As the motor cools, it reaches the reset threshold, 2 to 3 °C below the nominal operating temperature.
The relay resets and the motor can be started by pressing button M.

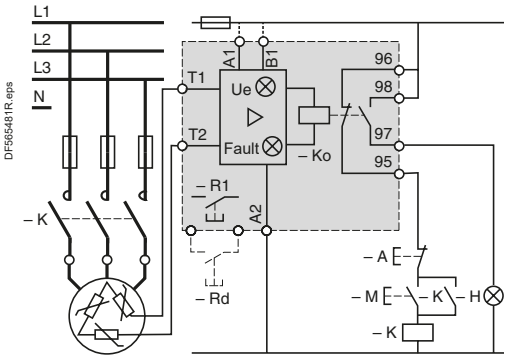

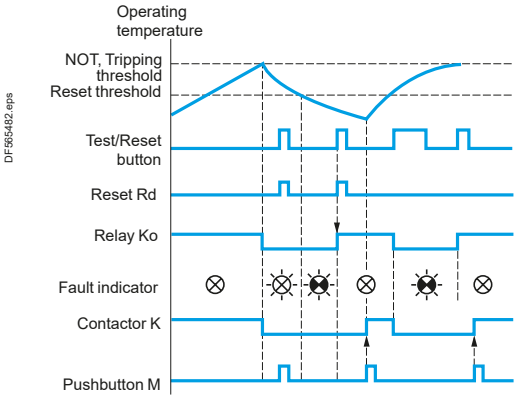

LT3SM protection units

Operation is very similar to that described above, except for the following:

Reset

After tripping on thermal fault and cooling to the reset threshold, the Test/RESET button on the unit (R1) or a remote reset button (Rd) must be pressed to energise the relay.

The fault is therefore memorised, even though the temperature of the probes has dropped to well below the reset threshold.

Signalling circuit

As the relay is fitted with 2 separate contacts, the signalling voltage may be different from the contactor control voltage.

Test

Pressing the Test/RESET button simulates a fault and causes the relay to drop out: the FAULT indicator comes on, as does the remote signalling indicator. The unit is reset by pressing the Test/RESET button again.

(1) PTC: Positive Temperature Coefficient.

References:
pages B11/17 and B11/18

Characteristics:
pages B11/50 to B11/53

Introduction

PB111974.eps



LR97D

PB111927.eps



LT47

LR97D and LT47 electronic over current relays have been developed to satisfy machine protection requirements.
These relays have definite time characteristics: current threshold and time based function.
They are particularly recommended for providing mechanical protection on machines with high resistive torque, high inertia and with strong probability of jamming under steady state conditions.
They can be used for motor protection in the case of long starting times or frequent starting.
The LR97D relay also incorporates two fixed time protection functions, one of 0.5 seconds against locked rotor and one of 3 seconds against phase failure.
LR97D and LT47 can be used to provide mechanical shock protection. In this case, setting the O-Time knob to minimum will ensure tripping in 0.3 seconds.
LR97D is designed to be directly connected downstream of the Deca contactor.
LT47 provides two current transformers, to be crossed by the motor power cables.

Applications

LR97D and LT47 relays are particularly suitable for the following machines:
■ Monitoring function for excessively long starting time on machines with a risk of difficult starting:
□ Machines with high resistive torque, high inertia machines.
■ Monitoring of machines during steady state operation: overtorque detection function
□ Machines with strong risk of jamming, machines with torque build-up over time,
□ Mechanical failure monitoring,
□ Faster detection of malfunctioning on machines where the motor is oversized in relation to its thermal protection I²t.
■ Motor protection for specific applications:
□ Machines with long starting times,
□ Machines with high on-load factor: more than 30 to 50 starts/hour,
□ Machine with fluctuating load from a steady state, where the thermal image of a thermal overload relay (thermal memory) is unsuitable in relation to actual overheating of the motor.

Examples of machines:
□ Conveyors, crushers and mixers,
□ Fans, pumps and compressors,
□ Centrifuges and spin-dryers,
□ Presses, shearing machines, saws, broaching machines, sanders and lifting hoists.

Operation

Because of their two separate time settings, LR97D and LT47 relays can be combined with the motor-starter function:
D-Time: starting time, O-Time: trip time during steady state.
The D-Time function is only available during the motor starting phase. During this phase the overload detection function is inhibited in order to allow starting. Under steady state conditions, when the motor current is greater than the setting current due to an overload or single-phasing, the red LED lights up and the internal relay switches its contact after a time preset by the O-Time knob.
The red LED stays on, indicating that the relay has tripped.

The relays are simple to set, in 5 easy steps:
- Adjust the 3 knobs to maximum (Load, D-Time and O-Time),
- Adjust the D-Time knob to the value corresponding to the motor starting time.
- When the motor reaches steady state, adjust the Load knob (turn the knob counter-clockwise until the red LED starts to flicker).
- Slowly turn the Load knob clockwise until the LED goes out.
- Set the required tripping time, using the O-Time knob.

Description

Description

LR97D●●●●●

DF531695.eps

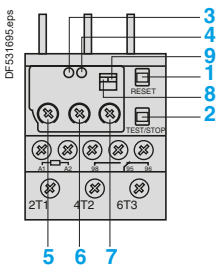

LT47●●●●●

DF531696.eps

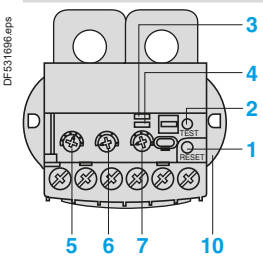

1 RESET knob
2 TEST/STOP knob
3 Ready/Run Indicator
4 Relay tripped indicator
5 Current setting
6 Adjustment of starting time
7 Adjustment of tripping time
8 Manual/Auto adjustment
9 Single-phase/3-phase adjustment
10 Retractable fixing lugs

Status signalling

LR97D●●●●●

To assist fast diagnostics, two LEDs (one green and one red) allow signalling of the operating status:

DF563948.eps

Status			LED signal	
			Green LED	Red LED
Voltage			On	Off
Starting				
Steady state			On	Off
Overload			On	
Trip	Over-current		Off	On
	Rotor locked		Off	
	Phase fail-ure	L1	Off	
		L2	Off	
		L3	Off	

LT47●●●●●

DF563947.eps

Condition	LED signal	
	Green LED	Red LED
Voltage	On	Off
Starting		
Steady state	On	Off
Overload	On	
Trip	Off	On

References: page B11/19
Dimensions, mounting: page B11/60
Schemes: page B11/60

Curves

LR97D

Overload protection
Protection against locked rotor and mechanical jamming under steady state conditions

DF532218.eps

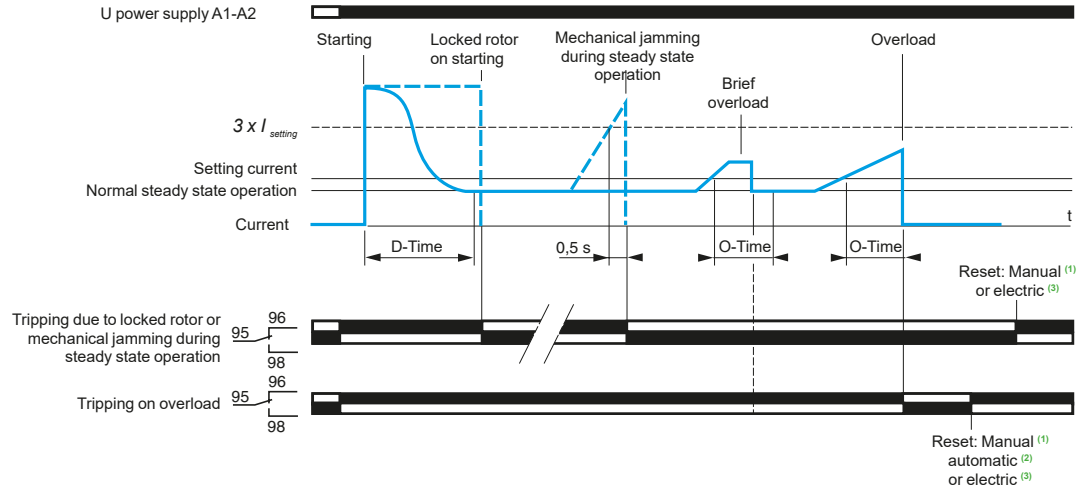

Overload protection
Protection against phase failure during starting and during steady state operation

DF532219.eps

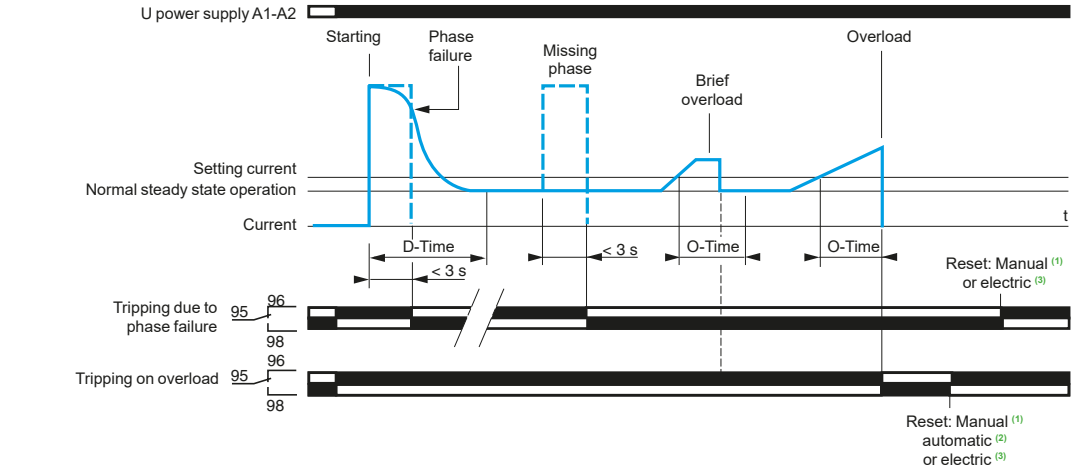

Mechanical shock protection

DF532220.eps

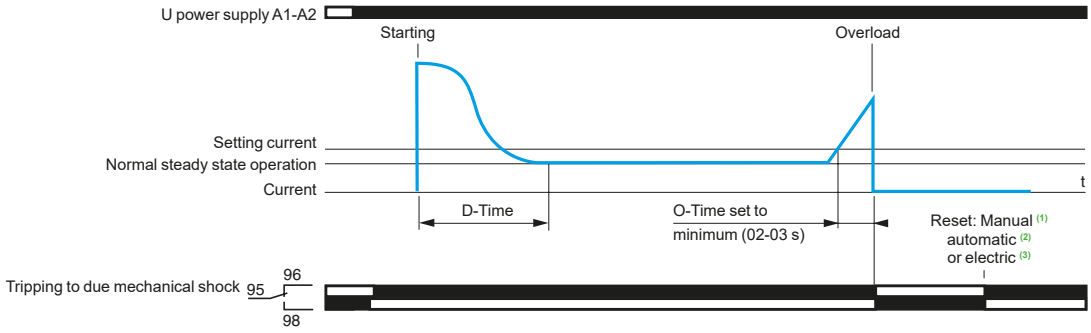

(1) By Reset button.
(2) Fixed time of 120 s. Selectable by dip switch. Function not available in the event of tripping due to locked rotor/mechanical jamming (I> 3 x I setting) or phase failure.
(3) By brief interruption of power supply, minimum 0.1 s.

References: page B11/19
Dimensions, mounting: page B11/60
Schemes: page B11/60

Curves

LT47

Overload protection

DF532221.eps

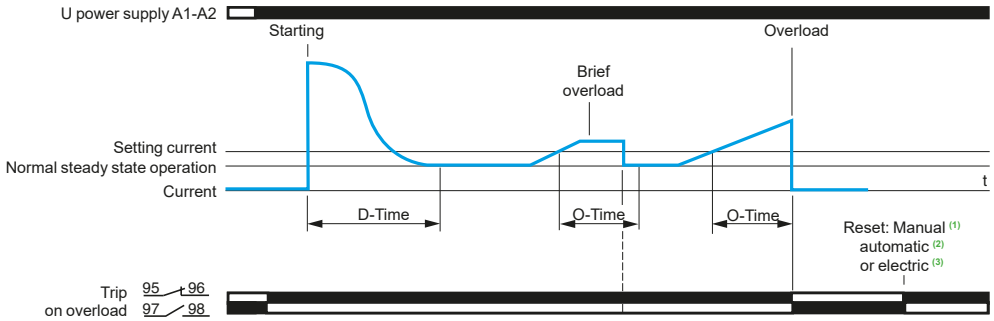

Mechanical shock protection

DF532222.eps

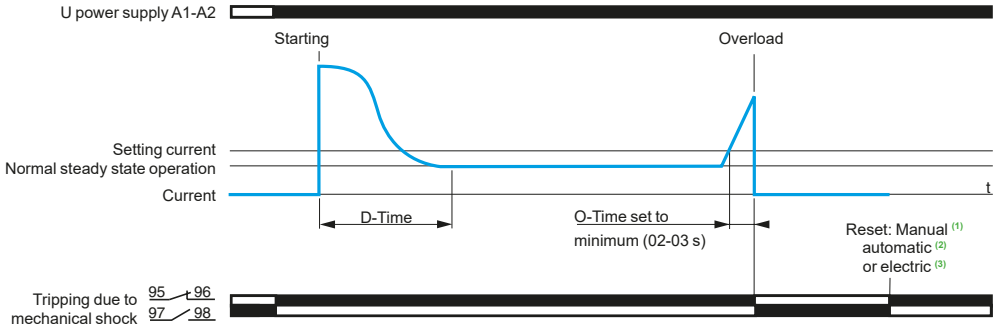

(1) By Reset button.
*(2) Only available on version with automatic reset (**LT47●●●●A**). Time adjustable from 1 to 120 s with the R-Time knob.*
(3) By brief interruption of power supply, minimum 0.1 s.

Characteristics

Environment

Relay type			LR97D●●●●●	LT47●●●●●
Conforming to standards			IEC/EN 60947-4-1, IEC/EN 60947-5-1, UL 60947-4-1, CSA C22.2 n° 60947-4-1, UL 60947-5-1, CSA C22.2 n° 60947-5-1, GB/T 14048.5	IEC/EN 60947-4-1, IEC/EN 60947-5-1, UL 60947-4-1, CSA C22.2 n° 60947-4-1, UL 60947-5-1, CSA C22.2 n° 60947-5-1, GB/T 14048.5
Product certifications			UL, CSA, CCC, EAC	UL, CSA, CCC, EAC
Degree of protection	Conforming to IEC 60529		IP 20 (front face)	IP 20 (front face)
Ambient air temperature around the device	Storage	**°C**	- 30…+ 80	- 30…+ 80
	Normal operation without derating (IEC 60947-4-1)	**°C**	- 25…+ 60	- 25…+ 60
Maximum operating altitude		**m**	2000	2000
Operating positions without derating	In relation to normal vertical mounting plane		Any position	Any position
Shock resistance	Permissible acceleration conforming to IEC 60068-2-27		15 gn - 11 ms	15 gn - 11 ms
Vibration resistance	Permissible acceleration conforming to IEC 60068-2-6		4 gn	4 gn
Dielectric strength at 50 Hz	Conforming to IEC 60947-4-1	**kV**	2	2
Surge withstand	Conforming to IEC 61000-4-5	**kV**	6	6
Resistance to electrostatic discharge	In open air	**kV**	8 (level 3)	8 (level 3)
	In direct mode	**kV**	6 (level 3)	6 (level 3)
Immunity to radiated radio-frequency disturbance		**V/m**	10 (level 3)	10 (level 3)
Immunity to fast transient currents		**kV**	2	2
Conducted emissions	Conforming to EN 55011		Class A	Class A
Conducted HF disturbance	Conforming to EN 61000-4-6	**V**	10	10

Ref.
Overload relays

References: page B11/19
Dimensions, mounting: page B11/60
Schemes: page B11/60

Characteristics

Auxiliary contact characteristics

Relay type				LR97D●●●●●				LT47●●●●●			
Contact type				1 NO/NC				1 N/O + 1N/C			
Conventional thermal current			A	3				3			
Maximum hold consumption of controlled contactor coils (occasional operating cycles of contact 95-96)	Conforming to IEC 60947		V	∼ 24	∼ 48	∼ 110	∼ 220	∼ 24	∼ 48	∼ 110	∼ 220
			VA	70	140	360	360	70	140	360	360
			V	⎓ 24	⎓ 48	⎓ 110	⎓ 220	⎓ 24	⎓ 48	⎓ 110	⎓ 220
			W	55	55	28	28	55	55	28	28
Short-circuit protection	By gG, BS fuses. Maximum rating or GB2 circuit breaker		A	3				3			
Connection by cable or lug-clamps											
Flexible cable without cable end	1 or 2 conductors	Min.	mm²	1 x 0.75				1 x 1			
		Max.	mm²	2 x 2.5				2 x 2.5			
Flexible cable with cable end	1 or 2 conductors	Min.	mm²	1 x 0.34				1 x 1			
		Max.	mm²	1 x 1.5 + 1 x 2.5				2 x 2.5			
External Ø of lugs			mm	7				7			
Ø of screw			mm	M3				M3.5			
Tightening torque			N.m	0.6…1.2				0.8...1.7			

Electrical characteristics of power circuit

Relay type				LR97D015●● to LR97D25●●	LR97D38●●	LT47●●●●●
Setting range	Depending on model		A	0.3…38		0.5…60
Tripping class				Adjustable		Adjustable
Rated insulation voltage (Ui)	Conforming to IEC 60947-4-1		V	690		690
	Conforming to UL, CSA		V	600		600
Rated impulse withstand voltage (Uimp)			kV	6		6
Frequency limits	Of the operating current		Hz	50…60		50…60
Connection by cable or lug-clamps						
Flexible cable without cable end	1 conductor	Min.	mm²	1.5	2.5	–
		Max.		10	10	–
Flexible cable with cable end	1 conductor	Min.	mm²	1	1	–
		Max.		4	6	–
External Ø of lugs			mm	10	12	–
Ø of screw			mm	M4	M4	–
Tightening torque			N.m	2	2	–

Operating characteristics

Relay type				LR97D●●●●●		LT47●●●●S		LT47●●●●A
Adjustment	Current		A	"Load" knob		"Load" knob		"Load" knob
	Time	D-time knob	s	0.5…30		0.5…30		–
		O-time knob	s	0.2/0.3…10		0.2/0.3…10		0.2/0.3…30
		R-time knob	s	–		–		1…120
Reset	Manual			Reset button		Reset button		Reset button
	Automatic			120 s fixed		–		R-time knob: 1-120 s
	Electrical			By interruption of power supply (minimum 0.1 s)		By interruption of power supply (minimum 0.1 s)		By interruption of power supply (minimum 0.1 s)
Protection functions				**On starting**	**Steady state**	**On starting**	**Steady state**	–
Overload $I_{max} > I_{setting}$	Tripping			Inhibited during D-time	After O-time	Inhibited during D-time	After O-time	After O-time
Locked rotor, mechanical jamming $I > 3 \times I_{setting}$	Tripping			After D-time	< 0.5 s	Inhibited during D-time	After O-time	After O-time
Sensitivity to phase failure	Tripping			< 3 s	< 3 s	Inhibited during D-time	After O-time	After O-time
Status and fault signalling (see table page 24517/2)				2 LEDs		2 LEDs		2 LEDs
TEST/STOP function	Test			No load		No load		No load
	Stop			Under load		Under load		Under load
Sealing				Yes		Yes		Yes

References: page B11/19
Dimensions, mounting: page B11/60
Schemes: page B11/60

Dimensions

LR97D●●●●

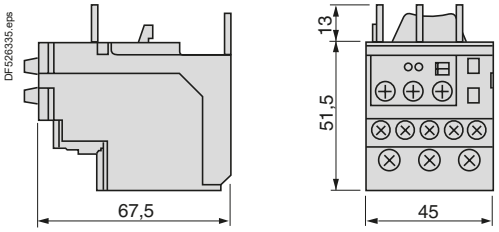

LT47●●●●

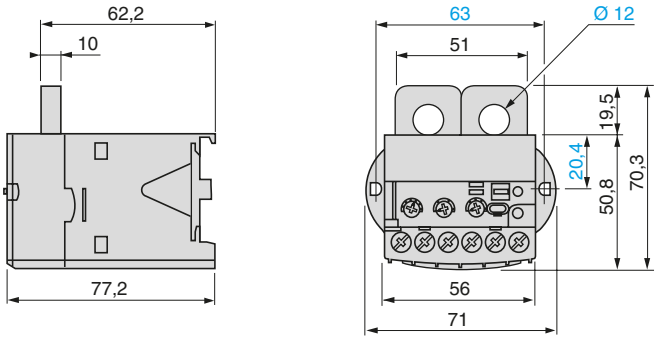

Mounting

LR97D●●●●

Direct mounting beneath the contactor

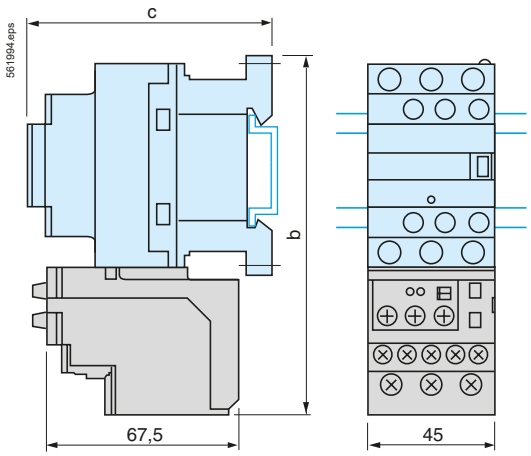

LC1	D09…D18	D25…D38
b	123	137
c	See pages B8/76 and B8/77	

LT47●●●●

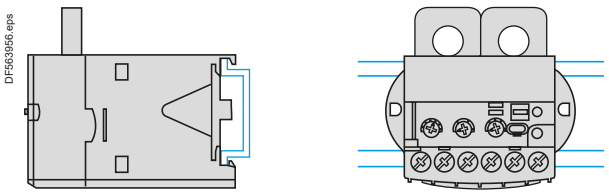

Note: Can be mounted on ⊔ rail.

Schemes

LR97D●●●●

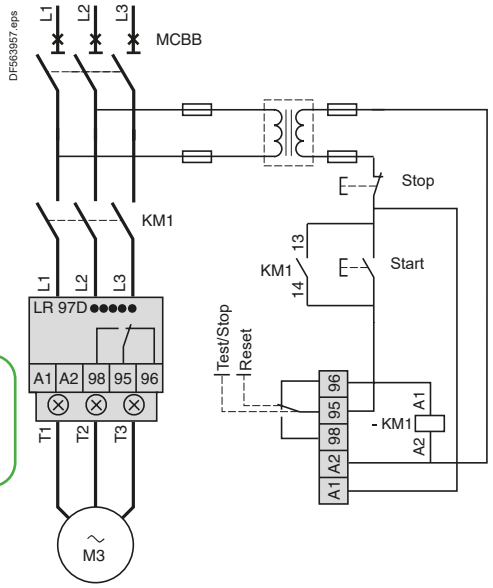

LT47●●●●

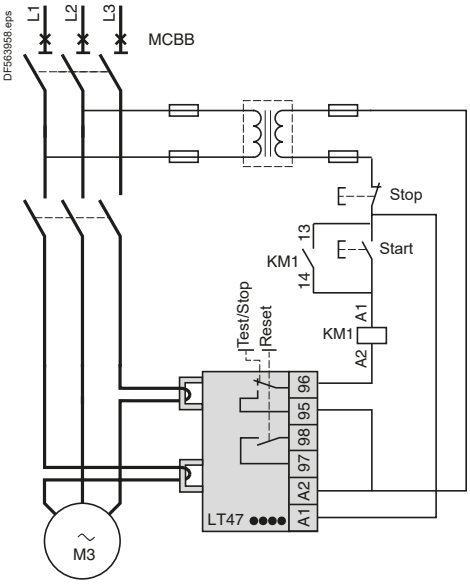

References:
page B11/19

Characteristics:
pages B11/56 to B11/59

Ref.
Overload relays

Part C

COMPONENTS FOR ADVANCED SOLUTIONS

TeSys Control
Ultra motor management controller

TeSys Active
T motor management system



C1/1

TeSys Active
Island motor starters

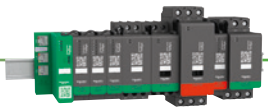

C2/1

TeSys Control - TeSys Active
Ultra Motor management controller
T Motor management system

TeSys Ultra Motor management controller

Type of product	Range	Pages
TeSys Ultra Motor management controller		C1/2
Current transformers for TeSys Ultra Motor management controller	From 30 to 800 A	C1/2
Type 2 coordination table for assemblies of: ■ circuit breaker + contactor + TeSys Ultra Motor management controller + current transformer ■ fuses + contactor + TeSys Ultra Motor management controller + current transformer		C1/3

TeSys T Motor management system

TeSys T Motor management controllers with Modbus, or CANopen, Devicenet, Profibus, Ethernet TCP/IP communication port		C1/4
Extension modules for TeSys T Motor management system		C1/5
HMI terminal and cables		C1/5
Accessories		C1/6
Coordination tables: ■ fuses (NFC, DIN type aM) + contactor + TeSys T + current transformers ■ magnetic circuit breaker + contactor + TeSys T + current transformers		C1/8

Technical Data for Designers C1/15

PB123883.eps



LUTM + LUCMT1BL + LUTC●●

PB123879.eps



LUTM10BL

PB123880.eps



LUCMT1BL

PB108391.eps



LUTC●●●●

References

Control bases (auxiliary supply voltage ⎓ 24 V)

Connection		For use with contactor	Reference	Weight
Current transformers	Control			kg
Screws	Screws	LC1D●●	**LUTM10BL**	0.800
		LC1F●●●	**LUTM20BL**	0.800

Control units

Description	Class	For motor type	Setting range	Reference	Weight kg
Advanced	10	3-phase	0.35…1.05	**LUCBT1BL**	0.140
	20	3-phase	0.35…1.05	**LUCDT1BL**	0.140
Multifunction	5 to 30	3-phase	0.35…1.05	**LUCMT1BL**	0.175

Current transformers

Operating current		Reference	Weight
Primary	Secondary		kg
50	1	**LUTC0501**	0.330
100	1	**LUTC1001**	0.450
200	1	**LUTC2001**	0.590
400	1	**LUTC4001**	0.870
800	1	**LUTC8001**	1.210

Function modules and communication modules

The Ultra Motor management controller is compatible with the modules listed below:

- ■ Thermal overload alarm module LUFW10,
- ■ Motor load indication module LUFV2,
- ■ Communication modules:
  - □ Modbus (LULC033),
  - □ CANopen (LULC08),
  - □ DeviceNet (LULC09),
  - □ Advantys STB (LULC15).

Note: *Communication modules **LULC07** (Profibus DP), **ASILUFC5** and **ASILUFC51** (AS-Interface) are not compatible with the Ultra controller.*
*Module **LUFW10** is only compatible with control units **LUCBT1BL** and **LUCDT1BL**.*

Characteristics: pages C1/16 to C1/19
Dimensions, mounting: page C1/20
Schemes: page C1/21

Product references

Combinations providing type 2 coordination

With Circuit breaker

Standard power ratings of 3-phase motors 50-60 Hz in category AC-3 400/415 V		Circuit breaker			Contactor	Ultra controller	Current transformers
PkW	IeA	Reference	Rating A	Irm (1) A	Reference (2)	Reference	Reference
18.5	35	**GV3L40**	40	560	**LC1D50A**	**LUTM + LUC●**	**3 x LUTC0501**
22	41	**GV3L50**	50	700	**LC1D50A**	**LUTM + LUC●**	**3 x LUTC1001**
30	55	**GV3L65**	65	910	**LC1D65A**	**LUTM + LUC●**	**3 x LUTC1001**
37	66	**GV4L80**	80	1040	**LC1D80**	**LUTM + LUC●**	**3 x LUTC1001**
45	80	**NSX100HMA**	100	1300	**LC1D95**	**LUTM + LUC●**	**3 x LUTC1001**
55	97	**NSX160HMA**	150	1350	**LC1D115**	**LUTM + LUC●**	**3 x LUTC2001**
75	132	**NSX160HMA**	150	1800	**LC1D150**	**LUTM + LUC●**	**3 x LUTC2001**
90	160	**NSX250HMA**	220	2200	**LC1F185**	**LUTM + LUC●**	**3 x LUTC2001**
110	195	**NSX250HMA**	220	2640	**LC1F225**	**LUTM + LUC●**	**3 x LUTC4001**
132	230	**NSX400HMA**	320	3200	**LC1F265**	**LUTM + LUC●**	**3 x LUTC4001**
160	280	**NSX400HMA**	320	4160	**LC1F330**	**LUTM + LUC●**	**3 x LUTC4001**
200	350	**NSX630HMA**	500	5000	**LC1F400**	**LUTM + LUC●**	**3 x LUTC4001**
220	385	**NSX630HMA**	500	5500	**LC1F400**	**LUTM + LUC●**	**3 x LUTC4001**
250	430	**NSX630HMA**	500	6000	**LC1F500**	**LUTM + LUC●**	**3 x LUTC8001**

With fuses

Standard power ratings of 3-phase motors 50-60 Hz in category AC-3 400/415 V		Switch-disconnector fuse	aM fuses		Contactor	Ultra controller	Current transformers
PkW	IeA	Reference	Size	Rating A	Reference (2)	Reference	Reference
18.5	35	**GS●F**	14 x 51	40	**LC1D40A**	**LUTM + LUC●**	**3 x LUTC0501**
22	41	**GS●J**	22 x 58	50	**LC1D50A**	**LUTM + LUC●**	**3 x LUTC1001**
30	55	**GS●J**	22 x 58	80	**LC1D80**	**LUTM + LUC●**	**3 x LUTC1001**
37	66	**GS●J**	22 x 58	100	**LC1D80**	**LUTM + LUC●**	**3 x LUTC1001**
45	80	**GS●J**	22 x 58	100	**LC1D95**	**LUTM + LUC●**	**3 x LUTC1001**
55	97	**GS●L**	T0	125	**LC1D115**	**LUTM + LUC●**	**3 x LUTC2001**
75	132	**GS●L**	T0	160	**LC1D150**	**LUTM + LUC●**	**3 x LUTC2001**
90	160	**GS●N**	T1	200	**LC1F185**	**LUTM + LUC●**	**3 x LUTC2001**
110	195	**GS●N**	T1	250	**LC1F225**	**LUTM + LUC●**	**3 x LUTC4001**
132	230	**GS●QQ**	T2	315	**LC1F265**	**LUTM + LUC●**	**3 x LUTC4001**
160	280	**GS●QQ**	T2	400	**LC1F330**	**LUTM + LUC●**	**3 x LUTC4001**
200	350	**GS2S**	T3	500	**LC1F400**	**LUTM + LUC●**	**3 x LUTC4001**
220	385	**GS2S**	T3	500	**LC1F400**	**LUTM + LUC●**	**3 x LUTC4001**
250	430	**GS2S**	T3	500	**LC1F500**	**LUTM + LUC●**	**3 x LUTC8001**
315	540	**GS2S**	T3	630	**LC1F630**	**LUTM + LUC●**	**3 x LUTC8001**

(1) Irm: setting current of the magnetic trip.
(2) For reversing operation, replace the prefix LC1 with LC2.

Characteristics: pages C1/16 to C1/19
Dimensions, mounting: page C1/20
Schemes: page C1/21

Product references

PB121434.eps



LTMR08MBD

PB121440.eps



LTMR08CBD

PB121441.eps



LTMR08DBD

PB121442.eps



LTMR08PBD

PB121443.eps



LTMR08EBD

Controllers

Setting range	Control voltage	Current range	Reference
A	V	A	
For Modbus			
8	⎓ 24	0.4...8	**LTMR08MBD**
	∿ 100...240	0.4...8	**LTMR08MFM**
27	⎓ 24	1.35...27	**LTMR27MBD**
	∿ 100...240	1.35...27	**LTMR27MFM**
100	⎓ 24	5...100	**LTMR100MBD**
	∿ 100...240	5...100	**LTMR100MFM**
For CANopen			
8	⎓ 24	0.4...8	**LTMR08CBD**
	∿ 100...240	0.4...8	**LTMR08CFM**
27	⎓ 24	1.35...27	**LTMR27CBD**
	∿ 100...240	1.35...27	**LTMR27CFM**
100	⎓ 24	5...100	**LTMR100CBD**
	∿ 100...240	5...100	**LTMR100CFM**
For DeviceNet			
8	⎓ 24	0.4...8	**LTMR08DBD**
	∿ 100...240	0.4...8	**LTMR08DFM**
27	⎓ 24	1.35...27	**LTMR27DBD**
	∿ 100...240	1.35...27	**LTMR27DFM**
100	⎓ 24	5...100	**LTMR100DBD**
	∿ 100...240	5...100	**LTMR100DFM**
For Profibus DP			
8	⎓ 24	0.4...8	**LTMR08PBD**
	∿ 100...240	0.4...8	**LTMR08PFM**
27	⎓ 24	1.35...27	**LTMR27PBD**
	∿ 100...240	1.35...27	**LTMR27PFM**
100	⎓ 24	5...100	**LTMR100PBD**
	∿ 100...240	5...100	**LTMR100PFM**
For Ethernet TCP/IP (communication protocols: Modbus/TCP and EtherNet/IP)			
8	⎓ 24	0.4...8	**LTMR08EBD**
	∿ 100...240	0.4...8	**LTMR08EFM**
27	⎓ 24	1.35...27	**LTMR27EBD**
	∿ 100...240	1.35...27	**LTMR27EFM**
100	⎓ 24	5...100	**LTMR100EBD**
	∿ 100...240	5...100	**LTMR100EFM**

Filter

Control voltage	Current max	Reference
V	mA	
∿ 150...240	130	**LTM9F**

Characteristics: pages C1/22 to C1/36
Curves: page C1/37
Dimensions, mounting: pages C1/38 to C1/39
Schemes: pages C1/40 to C1/43

Life Is On Schneider Electric

Product references

PB121436.eps



LTMEV40BD

PB121444.eps



LTMCC004

PB112374.eps



LTMCUF

Extension modules (with voltage measurement on the 3 phases)

Input control voltage	Number of inputs	Supply to the electronics	Reference
V			
⎓ 24	4	Via the controller	**LTMEV40BD**
∿ 100…240	4	Via the controller	**LTMEV40FM**

HMI terminals

Description		Supply Voltage	Reference
Operator control unit	Languages: English French Spanish	Supply via the controller	**LTMCU**
Operator control unit with Fast Device Replacement Service (FDR)	Languages: English French Spanish	Supply via the controller	**LTMCUF**
Kit for portable LTM CU			**LTM9KCU**

Description	Number and type of connectors	Length m	Reference
Connecting cables for the LTM CU control unit	2 x RJ45	1	**LTM9CU10**
		3	**LTM9CU30**
Connecting cables for the XBT N410	SUB-D 25-way female RJ45	2.5	**XBTZ938**

Cables

Description	Number and type of connectors	Length m	Reference
Connecting cables For connecting the controller to the extension module	2 x RJ45	0.04	**LTMCC004** (1)
		0.3	**LTM9CEXP03**
		1	**LTM9CEXP10**

(1) Sold in lots of 6.

Characteristics: pages C1/22 to C1/36
Curves: page C1/37
Dimensions, mounting: pages C1/38 to C1/39
Schemes: pages C1/40 to C1/43

Configuration tools

Description	Composition	Reference	Weight kg
Connection cable for PC	USB to RJ45 cable, lenght 2.5 m	**TCSMCNAM3M002P**	0.200

Current transformers (1)

Operational current		Reference	Weight
Primary	Secondary		
A	A		kg
100	**1** (2)	**LT6CT1001**	0.550
200	**1** (2)	**LT6CT2001**	0.550
400	**1** (2)	**LT6CT4001**	0.550
800	**1** (2)	**LT6CT8001**	0.680

PF526393.eps



LT6CT4001

Earth fault toroids (marketed under the Schneider Electric brand)

Rated operational current Ie	Internal Ø of toroid	Reference	Weight
A	mm		kg
Closed toroids, type A			
65	30	**50437**	0.120
85	50	**50438**	0.200
160	80	**50439**	0.420
250	120	**50440**	0.530
400	200	**50441**	1.320
630	300	**50442**	2.230
Split toroids, type OA			
85	46	**50485**	1.300
250	110	**50486**	3.200

PTC thermistor probes (3)

Description	Nominal Operating Temperature (NOT)	Colour	Unit reference (4)
	°C		
Triple probes	90	Green/green	**DA1TT090**
	110	Brown/brown	**DA1TT110**
	120	Grey/grey	**DA1TT120**
	130	Blue/blue	**DA1TT130**
	140	White/blue	**DA1TT140**
	150	Black/black	**DA1TT150**
	160	Blue/red	**DA1TT160**
	170	White/green	**DA1TT170**

PB121445.eps



DA1TT●●●

(1) The transformers offered for use with Ultra starters are suitable. Please consult our " Ultra starter-controllers" catalogue.
*(2) For use with **LTMR08●●** controllers.*
(3) PTC: Positive Temperature Coefficient.
(4) Sold in lots of 10.

Marking accessories (to be ordered separately)

Description	Composition	Height mm	Unit reference	Weight kg
Clip-in markers	Strips of 10 identical numbers (0 to 9) or capital letters (A to Z)	**5**	**NSYTRABF5●** (1)	0.002
		6	**NSYTRABF6●** (1)	0.002

Connection accessories

Description		Length m	Reference	Weight kg
For Modbus connection				
Cables fitted with 2 x RJ45 connectors		0.3	**VW3A8306R03**	0.045
		1	**VW3A8306R10**	0.065
		3	**VW3A8306R30**	0.125
T-junctions		0.3	**VW3A8306TF03**	0.032
		1	**VW3A8306TF10**	0.032
RS 485 line terminator		–	**VW3A8306R**	0.012
For CANopen connection				
Cables		50	**TSXCANCA50**	4.930
		100	**TSXCANCA100**	8.800
		300	**TSXCANCA300**	24.560
IP20 connectors SUB-D 9-way female Line end adapter switch	Elbowed (90°)	–	**TSXCANKCDF90T**	0.046
	Straight	–	**TSXCANKCDF180T**	0.049
	Elbowed (90°) with SUB-D 9-way connector for connection to PC or diagnostic tool	–	**TSXCANKCDF90TP**	0.051
For DeviceNet connection				
Cables		50	**TSXCANCA50**	4.930
		100	**TSXCANCA100**	8.800
		300	**TSXCANCA300**	24.560
For Profibus DP connection (2)				
Cables		100	**TSXPBSCA100**	–
		400	**TSXPBSCA400**	–
Connectors	With line terminator	–	**490NAD91103**	–
	Without line terminator	–	**490NAD91104**	–
	With line terminator and terminal port	–	**490NAD91105**	–
For Ethernet TCP/IP connection				
Shielded twisted pair cables to standard EIA/TIA568				
Cables fitted with 2 x RJ45 connectors for connection to terminal equipment	Straight	2	**490NTW00002**	–
		5	**490NTW00005**	–
		12	**490NTW00012**	–
		40	**490NTW00040**	–
		80	**490NTW00080**	–
Shielded twisted pair cables, UL and CSA 22.1 approved				
Cables fitted with 2 x RJ45 connectors for connection to terminal equipment	Straight	2	**490NTW00002U**	–
		5	**490NTW00005U**	–
		12	**490NTW00012U**	–
		40	**490NTW00040U**	–
		80	**490NTW00080U**	–
Ethernet Connector	Elbowed 180°		**LTM9CE180T** (3)	0.180

(1) When ordering, replace the ● in the reference with the number or letter required.
(2) To order other connectors and cables (UL cables for harsh environments, etc.), please consult our Customer Care Centre.
(3) Sold in packs of 6.

Characteristics: pages C1/22 to C1/36
Curves: page C1/37
Dimensions, mounting: pages C1/38 to C1/39
Schemes: pages C1/40 to C1/43

Coordination: fuses (NFC, DIN type aM) + contactor + TeSys T + current transformers

0.37 to 75 kW at 400/415 V: type 2 coordination

Standard power ratings of 3-phase motors 50/60 Hz in category AC-3 400/415 V		Switch-disconnector	aM fuses		Contactor	TeSys T controller	External current transformer
P	Ie	Reference (1)	Size	Rating	Reference (2)	Reference	Reference
kW	A			A			
0.37	1.1	GS1DD	10 x 38	2	LC1D09	LTMR08●●	–
0.55	1.5	GS1DD	10 x 38	2	LC1D09	LTMR08●●	–
0.75	1.9	GS1DD	10 x 38	4	LC1D09	LTMR08●●	–
1.1	2.7	GS1DD	10 x 38	4	LC1D09	LTMR08●●	–
1.5	3.6	GS1DD	10 x 38	4	LC1D09	LTMR08●●	–
2.2	4.9	GS1DD	10 x 38	6	LC1D09	LTMR08●●	–
3	6.5	GS1DD	10 x 38	8	LC1D09	LTMR27●●	–
4	8.5	GS1DD	10 x 38	10	LC1D09	LTMR27●●	–
5.5	11.5	GS1DD	10 x 38	16	LC1D12	LTMR27●●	–
7.5	15.5	GS1DD	10 x 38	16	LC1D25	LTMR27●●	–
10	19	GS●F	14 x 51	25	LC1D25	LTMR27●●	–
11	22	GS●F	14 x 51	25	LC1D25	LTMR27●●	–
15	29	GS●F	14 x 51	32	LC1D32	LTMR100●●	–
18.5	35	GS●F	14 x 51	40	LC1D40A	LTMR100●●	–
22	41	GS●J	22 x 58	50	LC1D50A	LTMR100●●	–
30	55	GS●J	22 x 58	80	LC1D65A	LTMR100●●	–
37	66	GS●J	22 x 58	100	LC1D80	LTMR100●●	–
45	80	GS●J	22 x 58	100	LC1D95	LTMR100●●	–
55	97	GS●K	T00	125	LC1D115	LTMR08●●	LT6CT2001
75	132	GS●L	T0	160	LC1D150	LTMR08●●	LT6CT2001

(1) GS●: GS1 for direct operator, GS2 for external operator.
(2) For reversing operation, replace the prefix LC1 with LC2.

90 to 355 kW at 400 V: type 2 coordination

Standard power ratings of 3-phase motors 50/60 Hz in category AC-3e			Switch-disconnector	aM fuses		Contactor	TeSys T controller		External current transformer
400 V			Product type	Size	Rating	Product type	Product type (1)	Ir setting (2)	Reference
P	Ie	Iq							
kW	A	kA			A			A	
90	160	80	GS●●N	1	200	LC1G185	LTMR08●●●	160	LUTC2001
110	195	80	GS●●N	1	250	LC1G225	LTMR08●●●	195	LUTC4001
132	230	80	GS●●QQ	2	315	LC1G265	LTMR08●●●	230	LUTC4001
160	280	80	GS●●QQ	2	400	LC1G330	LTMR08●●●	280	LUTC4001
200	350	80	GS2S	3	500	LC1G400	LTMR08●●●	350	LUTC8001
250	430	80	GS2S	3	500	LC1G500	LTMR08●●●	430	LUTC8001
315	540	80	GS2S	3	630	LC1G630	LTMR08●●●	540	LUTC8001
355	610	80	GS2V	4	800	LC1G630	LTMR08●●●	610	LUTC8001

(1) Please refer to C1/4 to select the complete reference for TeSys T *motor management controller.*
(2) This setting is a general guidance, Ir should be adjusted according to motor characteristics and conditions of use.

Characteristics: pages C1/22 to C1/36
Curves: page C1/37
Dimensions, mounting: pages C1/38 to C1/39
Schemes: pages C1/40 to C1/43

Coordination: magnetic circuit breaker + contactor + TeSys T + current transformers

0.06 to 75 kW at 400/415 V: type 2 coordination

Standard power ratings of 3-phase motors 50/60 Hz in category AC-3 400/415 V			Limiter block	Circuit breaker	Contactor	TeSys T controller	External current transformer
P	Ie	Iq	Reference	Reference	Reference	Reference	Reference
kW	A	kA					
0.06	0.2	130	–	**GV2L03**	**LC1D09**	**LTMR08●●**	–
0.09	0.3	130	–	**GV2L03**	**LC1D09**	**LTMR08●●**	–
0.12	0.44	130	–	**GV2L04**	**LC1D09**	**LTMR08●●**	–
0.18	0.6	130	–	**GV2L04**	**LC1D09**	**LTMR08●●**	–
0.25	0.85	130	–	**GV2L05**	**LC1D09**	**LTMR08●●**	–
0.37	1.1	130	–	**GV2L05**	**LC1D09**	**LTMR08●●**	–
0.4	1.1	130	–	**GV2L05**	**LC1D09**	**LTMR08●●**	–
0.55	1.5	130	–	**GV2L06**	**LC1D09**	**LTMR08●●**	–
0.6	1.5	130	–	**GV2L06**	**LC1D09**	**LTMR08●●**	–
0.75	1.9	130	–	**GV2L07**	**LC1D09**	**LTMR08●●**	–
0.8	1.9	130	–	**GV2L07**	**LC1D09**	**LTMR08●●**	–
1.1	2.7	130	–	**GV2L07**	**LC1D18**	**LTMR08●●**	–
1.5	3.6	130	–	**GV2L08**	**LC1D18**	**LTMR08●●**	–
2.2	4.9	130	–	**GV2L10**	**LC1D18**	**LTMR08●●**	–
3	6.5	130	–	**GV2L14**	**LC1D18**	**LTMR08●●**	–
4	8.5	130	–	**GV2L14**	**LC1D18**	**LTMR27●●**	–
5.5	11.5	130	–	**GV2L16**	**LC1D25**	**LTMR27●●**	–
7.5	15.5	50	–	**GV2L20**	**LC1D25**	**LTMR27●●**	–
9	18.1	50	–	**GV2L22**	**LC1D25**	**LTMR27●●**	–
11	22	50	–	**GV2L22**	**LC1D25**	**LTMR27●●**	–
15	29	50	–	**GV3L32**	**LC1D40A**	**LTMR100●●**	–
7.5	15.5	85	**GV1L3**	**GV2L20**	**LC1D25**	**LTMR27●●**	–
9	18.1	85	**GV1L3**	**GV2L22**	**LC1D25**	**LTMR27●●**	–
11	22	85	**GV1L3**	**GV2L22**	**LC1D25**	**LTMR27●●**	–
15	29	85	**GV1L3**	**GV2L32**	**LC1D40A**	**LTMR100●●**	–
18.5	35	50	–	**GV3L40**	**LC1D50A**	**LTMR100●●**	–
22	41	50	–	**GV3L50**	**LC1D50A**	**LTMR100●●**	–
30	55	50	–	**GV3L65**	**LC1D65A**	**LTMR100●●**	–
37	66	70	–	**GV4LE80S**	**LC1D80**	**LTMR100●●**	–
45	80	70	–	**NSX100HMA**	**LC1D115**	**LTMR100●●**	–

Characteristics: pages C1/22 to C1/36
Curves: page C1/37
Dimensions, mounting: pages C1/38 to C1/39
Schemes: pages C1/40 to C1/43

Coordination: magnetic circuit breaker + contactor + TeSys T + current transformers

0.06 to 75 kW at 400/415 V: type 2 coordination

Standard power ratings of 3-phase motors 50/60 Hz in category AC-3 400/415 V			Circuit breaker	Contactor	TeSys T controller	External current transformer
P	Ie	Iq	Reference	Reference	Reference	Reference
kW	A	kA				
55	97	50	**NSX160NMA**	**LC1D115**	**LTMR08●●**	**LT6CT2001**
55	97	70	**NSX160HMA**	**LC1D115**	**LTMR08●●**	**LT6CT2001**
75	132	50	**NSX160NMA**	**LC1D150**	**LTMR08●●**	**LT6CT2001**
75	132	70	**NSX160HMA**	**LC1D150**	**LTMR08●●**	**LT6CT2001**

90 to 250 kW at 400 V: type 2 coordination

Standard power ratings of 3-phase motors 50/60 Hz in category AC-3e			Circuit breaker		Contactor	TeSys T controller		External current transformer
400 V			Product type (1)	Irm (2)	Product type	Product type (3)	Ir setting (2)	Reference
P	Ie	Iq						
kW	A	kA		A			A	
90	160	130	**NSX250● + MA**	2200	**LC1G185**	**LTMR08●●**	160	**LUTC2001**
110	195	130	**NSX250● + MA**	2640	**LC1G225**	**LTMR08●●**	195	**LUTC2001**
132	230	130	**NSX400● + MicroLogic 1.3 M**	3200	**LC1G265**	**LTMR08●●**	230	**LUTC4001**
150	280	130	**NSX400● + MicroLogic 1.3 M**	3840	**LC1G330**	**LTMR08●●**	280	**LUTC4001**
200	350	130	**NSX630● + MicroLogic 1.3 M**	5000	**LC1G400**	**LTMR08●●**	350	**LUTC4001**
220	388	130	**NSX630● + MicroLogic 1.3 M**	5500	**LC1G500**	**LTMR08●●**	388	**LUTC4001**
250	430	130	**NSX630● + MicroLogic 1.3 M**	6000	**LC1G500**	**LTMR08●●**	430	**LUTC8001**
300	460	130	**NS800L + MicroLogic 5.0 LR OFF**	8800	**LC1G630**	**LTMR08●●**	460	**LUTC8001**
335	575	130	**NS800L + MicroLogic 5.0 LR OFF**	9600	**LC1G630**	**LTMR08●●**	575	**LUTC8001**

(1) Product type to be completed by replacing the ● with the breaking performance code:

Rated conditional short-circuit (kA)	NSX250●/ NSX400●/ NSX630●					NS800●
Breaking performance code	F	N	H	S	L	L
400 V	36	50	70	100	130	150

(2) This setting is a general guidance, Ir and Irm should be adjusted according to motor characteristics and conditions of use.
(3) Please refer to C1/4 to select the complete reference for TeSys T *motor management controller.*

Substitution table

	Old range LT6P multifunction protection relay			New range T controllers		
Motor current	Reference	Reference	External current transformer Reference	Reference	Reference	External current transformer Reference
	∼ 100…240 V	⎓ 24 V		∼ 100…240 V	⎓ 24 V	
I < 5 A	LT6P0M005FM	LT6P0M005S144	–	**LTMR08●FM**	**LTMR08●BD**	**–**
5 A < I < 25 A	LT6P0M025FM	LT6P0M025S144	–	**LTMR27●FM**	**LTMR27●BD**	**–**
25 A < I < 100 A	LT6P0M005FM	LT6P0M005S144	LT6CT1001	**LTMR100●FM**	**LTMR100●BD**	**–**
100 A < I < 200 A	LT6P0M005FM	LT6P0M005S144	LT6CT2001	**LTMR08●FM**	**LTMR08●BD**	**LT6CT2001**
200 A < I < 400 A	LT6P0M005FM	LT6P0M005S144	LT6CT4001	**LTMR08●FM**	**LTMR08●BD**	**LT6CT4001**
400 A < I < 800 A	LT6P0M005FM	LT6P0M005S144	LT6CT8001	**LTMR08●FM**	**LTMR08●BD**	**LT6CT8001**

Characteristics: pages C1/22 to C1/36
Curves: page C1/37
Dimensions, mounting: pages C1/38 to C1/39
Schemes: pages C1/40 to C1/43

Life Is On Schneider Electric

Coordination: fuses (NFC, DIN type aM) + contactor + TeSys T + current transformers

0.37 to 75 kW at 690 V: type 2 coordination

Standard power ratings of 3-phase motors 50/60 Hz in category AC-3		Switch-disconnector (1)	aM fuses		Contactor	TeSys T controller	External current tranformer
P	Ie	Reference	Size	Rating	Reference	Reference	Reference
kW	A			A			
0.37	0.64	**GS●F**	14 x 51	1	**LC1D09**	**LTMR08●●**	–
0.55	0.87	**GS●F**	14 x 51	2	**LC1D09**	**LTMR08●●**	–
0.75	1.1	**GS●F**	14 x 51	2	**LC1D09**	**LTMR08●●**	–
1.1	1.6	**GS●F**	14 x 51	2	**LC1D09**	**LTMR08●●**	–
1.5	2.1	**GS●F**	14 x 51	4	**LC1D09**	**LTMR08●●**	–
2.2	2.8	**GS●F**	14 x 51	4	**LC1D09**	**LTMR08●●**	–
3	3.8	**GS●F**	14 x 51	6	**LC1D09**	**LTMR08●●**	–
4	4.9	**GS●F**	14 x 51	6	**LC1D09**	**LTMR08●●**	–
5.5	6.7	**GS●F**	14 x 51	8	**LC1D25**	**LTMR08●●**	–
7.5	8.9	**GS●F**	14 x 51	10	**LC1D25**	**LTMR27●●**	–
11	12.8	**GS●F**	14 x 51	16	**LC1D25**	**LTMR27●●**	–
15	17	**GS●G**	T000	20	**LC1D32**	**LTMR27●●**	–
18.5	21	**GS●G**	T000	25	**LC1D32**	**LTMR27●●**	–
22	24	**GS●G**	T000	32	**LC1D40A**	**LTMR27●●**	–
30	32	**GS●G**	T000	40	**LC1D50A**	**LTMR100●●**	–
37	39	**GS●J**	22 x 58	50	**LC1D65A**	**LTMR100●●**	–
45	47	**GS●J**	22 x 58	63	**LC1D80**	**LTMR100●●**	–
55	57	**GS●J**	22 x 58	80	**LC1D115**	**LTMR100●●**	–
75	77	**GS●KK**	T00	100	**LC1D115**	**LTMR100●●**	–

(1) GS●: GS1 for direct operator, GS2 for external operator.

110 to 400 kW at 690 V: type 2 coordination

Standard power ratings of 3-phase motors 50/60 Hz in category AC-3e			Switch-disconnector	aM fuses		Contactor	TeSys T controller		External current transformer
690 V			Product type	Size	Rating	Product type	Product type (1)	Ir setting (2)	Reference
P	Ie	Iq							
kW	A	kA			A			A	
110	113	80	**GS●●KK**	0	125	**LC1G185**	**LTMR08●●●**	113	**LUTC2001**
132	134	80	**GS●●L**	0	160	**LC1G265**	**LTMR08●●●**	134	**LUTC2001**
160	162	80	**GS●●N**	1	160	**LC1G265**	**LTMR08●●●**	162	**LUTC2001**
200	203	80	**GS●●N**	1	200	**LC1G330**	**LTMR08●●●**	203	**LUTC2001**
220	224	80	**GS●●QQ**	2	250	**LC1G400**	**LTMR08●●●**	224	**LUTC4001**
250	250	80	**GS●●QQ**	2	250	**LC1G400**	**LTMR08●●●**	250	**LUTC4001**
290	292	80	**GS●●QQ**	2	315	**LC1G500**	**LTMR08●●●**	292	**LUTC4001**
315	313	80	**GS●●QQ**	2	400	**LC1G500**	**LTMR08●●●**	313	**LUTC4001**
355	354	80	**GS2S**	3	500	**LC1G630**	**LTMR08●●●**	354	**LUTC4001**
400	400	80	**GS2S**	3	630	**LC1G630**	**LTMR08●●●**	400	**LUTC8001**

(1) Please refer to C1/4 to select the complete reference for TeSys T *motor management controller.*
(2) This setting is a general guidance, Ir and Irm should be adjusted according to motor characteristics and conditions of use.

Characteristics: pages C1/22 to C1/36
Curves: page C1/37
Dimensions, mounting: pages C1/38 to C1/39
Schemes: pages C1/40 to C1/43

Coordination: magnetic circuit breaker + contactor + TeSys T + current transformers

½ to 20 HP at 480 V - 3P

Standard power ratings 480 V			Limiter block	Circuit breaker	Contactor	TeSys T controller	External current transformer
P	Ie	Iq	Reference	Reference	Reference	Reference	Reference
HP	A	kA					
–	0.49	100	–	**GV2L04**	**LC1D09**	**LTMR08●●**	–
–	0.64	100	–	**GV2L05**	**LC1D09**	**LTMR08●●**	–
–	0.87	100	–	**GV2L05**	**LC1D09**	**LTMR08●●**	–
0.5	1.1	100	–	**GV2L06**	**LC1D09**	**LTMR08●●**	–
0.75	1.6	100	–	**GV2L06**	**LC1D25**	**LTMR08●●**	–
1	2.1	65	**GV1L3**	**GV2L07**	**LC1D25**	**LTMR08●●**	–
1.5	3	65	**GV1L3**	**GV2L08**	**LC1D25**	**LTMR08●●**	–
2	3.4	65	**GV1L3**	**GV2L08**	**LC1D25**	**LTMR08●●**	–
3	4.8	65	**GV1L3**	**GV2L10**	**LC1D25**	**LTMR08●●**	–
5	7.6	65	**GV1L3**	**GV2L14**	**LC1D25**	**LTMR08●●**	–
7.5	11	65	**GV1L3**	**GV2L16**	**LC1D25**	**LTMR27●●**	–
10	14	65	**GV1L3**	**GV2L16**	**LC1D25**	**LTMR27●●**	–
15	21	65	**GV1L3**	**GV2L22**	**LC1D32**	**LTMR27●●**	–
20	27	65	**GV1L3**	**GV2L32**	**LC1D40A**	**LTMR100●●**	–

0.25 to 22 kW at 690 V: type 2 coordination

Standard power ratings of 3-phase motors 50/60 Hz in category AC-3 690 V			Limiter block	Circuit breaker	Contactor	TeSys T controller	External current transformer
P	Ie	Iq	Reference	Reference	Reference	Reference	Reference
kW	A	kA					
–	0.49	100	–	**GV2L04**	**LC1D09**	**LTMR08●●**	–
–	0.64	100	–	**GV2L05**	**LC1D09**	**LTMR08●●**	–
–	0.87	100	–	**GV2L05**	**LC1D09**	**LTMR08●●**	–
0.75	1.1	100	–	**GV2L06**	**LC1D09**	**LTMR08●●**	–
1.1	1.6	100	–	**GV2L06**	**LC1D09**	**LTMR08●●**	–
1.5	2.1	65	**LA9LB920**	**GV2L07**	**LC1D09**	**LTMR08●●**	–
2.2	2.8	65	**LA9LB920**	**GV2L08**	**LC1D09**	**LTMR08●●**	–
3	3.8	65	**LA9LB920**	**GV2L08**	**LC1D09**	**LTMR08●●**	–
4	4.9	65	**LA9LB920**	**GV2L10**	**LC1D09**	**LTMR08●●**	–
5.5	6.7	65	**LA9LB920**	**GV2L14**	**LC1D09**	**LTMR08●●**	–
7.5	8.9	65	**LA9LB920**	**GV2L14**	**LC1D09**	**LTMR27●●**	–
9	10.6	65	**LA9LB920**	**GV2L16**	**LC1D18**	**LTMR27●●**	–
11	12.8	65	**LA9LB920**	**GV2L16**	**LC1D18**	**LTMR27●●**	–
15	17	65	**LA9LB920**	**GV2L20**	**LC1D18**	**LTMR27●●**	–
18.5	21	65	**LA9LB920**	**GV2L22**	**LC1D18**	**LTMR27●●**	–
22	24	65	**LA9LB920**	**GV2L32**	**LC1D18**	**LTMR100●●**	–

Characteristics: pages C1/22 to C1/36
Curves: page C1/37
Dimensions, mounting: pages C1/38 to C1/39
Schemes: pages C1/40 to C1/43

Product references

50437	LTMR08PFM
50438	LTMR100CBD
50439	LTMR100CFM
50440	LTMR100DBD
50441	LTMR100DFM
50442	LTMR100EBD
50485	LTMR100EFM
50486	LTMR100MBD
490NAD91103	LTMR100MFM
490NAD91104	LTMR100PBD
490NAD91105	LTMR100PFM
490NTW00012U	LTMR27CBD
490NTW00040U	LTMR27CFM
490NTW00080U	LTMR27DBD
DA1TT090	LTMR27DFM
DA1TT110	LTMR27EBD
DA1TT120	LTMR27EFM
DA1TT130	LTMR27MBD
DA1TT140	LTMR27MFM
DA1TT150	LTMR27PBD
DA1TT160	LTMR27PFM
DA1TT170	LUCBT1BL
LT6CT1001	LUCDT1BL
LT6CT2001	LUCMT1BL
LT6CT4001	LUTC0501
LT6CT8001	LUTC1001
LTM9BPS	LUTC2001
LTM9CE180T	LUTC4001
LTM9CEXP10	LUTC8001
LTM9CU10	LUTM10BL
LTM9CU30	LUTM20BL
LTM9F	TSXCANCA100
LTM9KCU	TSXCANCA300
LTMCU	TSXCANCA50
LTMCUF	TSXCANKCDF180T
LTMEV40BD	TSXCANKCDF90T
LTMEV40FM	TSXCANKCDF90TP
LTMR08CBD	TSXPBSCA100
LTMR08CFM	TSXPBSCA400
LTMR08DBD	VW3A8306R
LTMR08DFM	VW3A8306R03
LTMR08EBD	VW3A8306R10
LTMR08EFM	VW3A8306R30
LTMR08MBD	VW3A8306TF03
LTMR08MFM	VW3A8306TF10
LTMR08PBD	XBTZ938

This document is current. Click on the product reference to get the most recent availability status (hyperlink to **se.com** product datasheet). If your product variant is no longer available, please consult your distributor or regional sales office.

Technical Data for Designers

Contents

Ultra Motor management controller:
> characteristics ..... C1/16 to C1/19
> dimensions C1/20
> schemes C1/21

T Motor management system:
> characteristics ..... C1/22 to C1/36
> curves C1/37
> dimensions ..... C1/38 to C1/39
> schemes ..... C1/40 to C1/43

PB123882.eps



Introduction

Above 32 A, TeSys Ultra Motor management controller provides a motor starter management solution identical to that provided by TeSys Ultra starter-controllers.

Used in conjunction with a short-circuit protection device and a contactor, it provides a motor starter whose functions are the same as those of a TeSys Ultra starter-controller and, in particular, provides the following functions: overload protection, motor starter control and application monitoring.

It consists of a control unit whose adjustment range is compatible with the secondary of current transformers, plus a control base which also allows fitment of a function module or a communication module.

It requires a ⎓ 24 V external power supply.

The secondaries of current transformers, the ⎓ 24 V power supply, the 10 inputs and the 5 outputs are connected by screw terminal block.

PB121450.eps



Application example

Detecting blockage of a rock crusher by monitoring the motor current.

Operating conditions

- Power: 90 kW at 400 V.
- In: 185 A.
- Duty class S1.
- Control circuit voltage: ∿ 230 V
- Control-command by PLC and serial link using the Modbus protocol.

Products used

Description	Item	Quantity	Reference	Page
Controller	1	1	**LUTM20BL**	C1/2 C1/3
Multifunction control unit	2	1	**LUCMT1BL**	A4/12
Modbus communication module	3	1	**LULC033**	A4/27 to A4/31
Current transformer	4	3	**LUTC4001**	C1/2 C1/3
Contactor	5	1	**LC1F185P7**	–
Circuit breaker	6	1	**GV5P150F**	–

PB123884.eps

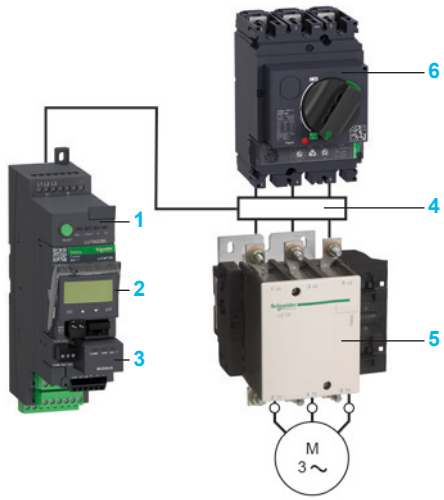

Functions performed

- Short-circuit protection with level of protection of 70 kA at 400V.
- Electronic protection against thermal overloads with an adjustment range of 4.
- Detection of crusher blockage by monitoring the induced overcurrent. To use the "overtorque or jam" function, the following parameters must be entered:
  - trip: the answer yes/no enables or disables the function,
  - time before tripping: the time period during which the value of the current must be above the tripping threshold in order to cause tripping (adjustable from 1 to 30 s).
  - tripping threshold: value as a % of the load current ratio in relation to the setting current. If the ratio remains above this threshold for the time specified in the previous parameter, the product trips (adjustable from 100 to 800 %).

It is possible to set the parameter for an alarm at a preset threshold under the same conditions as above.

References:
pages C1/2 and C1/3
Dimensions, mounting:
page C1/20
Schemes:
page C1/21

Life Is On Schneider Electric

Application example

Scheme

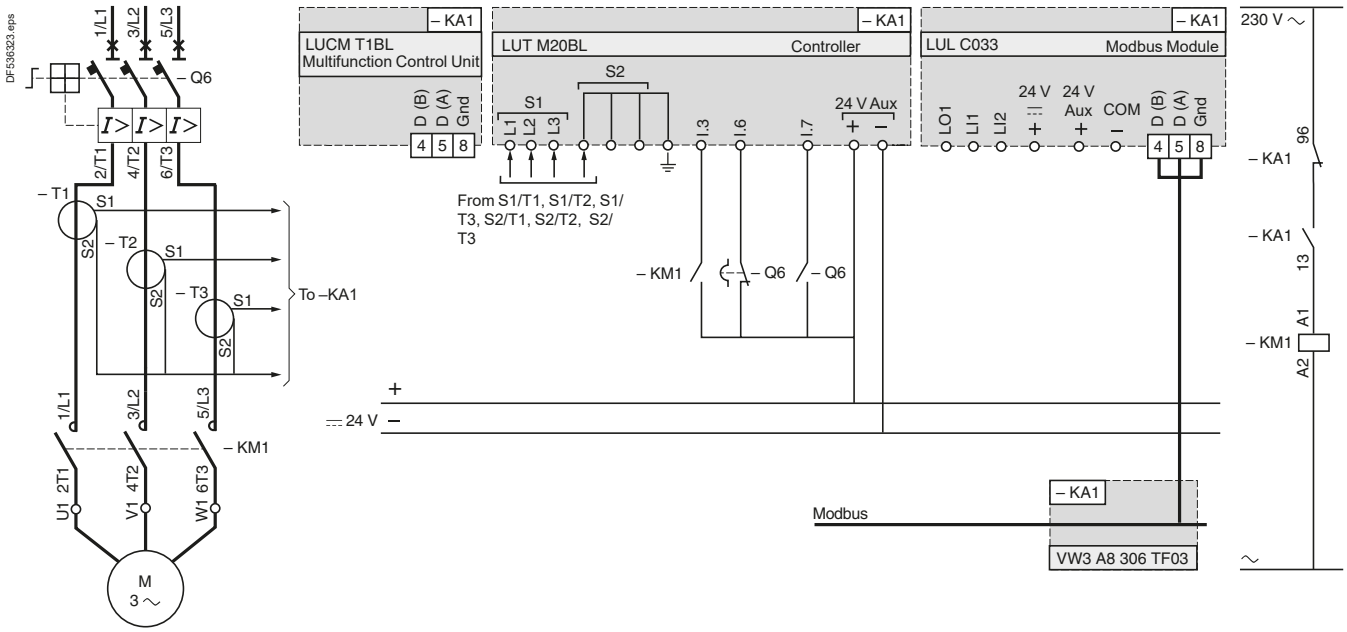

Other functions

The multifunction control unit incorporates other control and protection functions, such as: monitoring and control of phase current, alarm, …
Communication module LUL C033 also provides a programmable output and two programmable inputs.

References:
pages C1/2 and C1/3
Dimensions, mounting:
page C1/20
Schemes:
page C1/21

Characteristics

Environment

Control base and control unit type			LUTM + LUCBT1BL or LUCDT1BL without LULC	LUTM + LUCMT1BL or LULC
Product certifications			UL, CSA, ASEFA, UKCA	
Conforming to standards			IEC/EN 60947-4-1, UL 508, CSA C22-2 N°14	
Rated insulation voltage of the outputs (Ui)	Conforming to IEC/EN 60947-1, overvoltage category III, degree of pollution: 3	**V**	250	
	Conforming to UL508, CSA C22-2 n°14	**V**	250	
Rated impulse withstand voltage of the outputs (Uimp)	Conforming to IEC/EN 60947-4-1	**kV**	4	
Degree of protection Conforming to IEC/EN 60947-1 (protection against direct finger contact)	Front panel (outside connection zone)		IP 40	
	Front panel and wired terminals		IP 20	
	Other faces		IP 20	
Protective treatment	Conforming to IEC/EN 60068-2-30	**Cycles**	12	
	Conforming to IEC/EN 60068-2-11	**h**	48	
Ambient air temperature around the device	Storage	**°C**	- 40…+ 85	
	Operation	**°C**	- 25…+ 70	- 25…+ 60
Maximum operating altitude		**m**	2000	
Operating positions Without derating	In relation to normal vertical mounting plane		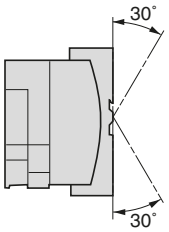	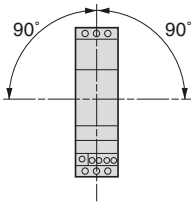
Flame resistance	Conforming to UL 94		V2	
	Conforming to IEC/EN 60695-2-12	**°C**	960 (parts supporting live components)	
		°C	650	
Shock resistance 1/2 sine wave = 11 ms	Conforming to IEC/EN60068-2-27 (1)		15 gn	
Vibration resistance 5…300 Hz	Conforming to IEC/EN 60068-2-6 (1)		4 gn	
Resistance to electrostatic discharge	Conforming to IEC/EN 61000-4-2	**kV**	In open air: 8 - Level 3	
		kV	On contact: 6 - Level 3	
Resistance to radiated fields	Conforming to IEC/EN 61000-4-3	**V/m**	10 - Level 3	
Immunity to fast transient currents	Conforming to IEC/EN 61000-4-4	**kV**	CT outputs and inputs: 4 - Level 4	
		kV	Inputs and supply: 2 - Level 3	
Immunity to radioelectric fields	Conforming to IEC/EN 61000-4-6	**V**	10	

Control base and control unit relays

			Common mode	Serial mode
Immunity to dissipated shock waves	Conforming to IEC/EN 60947-4-1			
	Output relays / power line	**kV**	4	2
	Inputs	**kV**	2	1
	Serial communication	**kV**	2	–

(1) Without modifying the contact states, in the most unfavourable direction.

References: pages C1/2 and C1/3
Dimensions, mounting: page C1/20
Schemes: page C1/21

Life Is On Schneider Electric

Control circuit supply characteristics

Operational voltage		**V**	⎓ 20.4…28.8
Power consumption		**W**	2 max
Associated protection		**A**	gG fuse. 0.5
Cabling			
Connectors	Pitch	**mm**	5
Flexible cable without cable end	1 conductor	**mm²**	0.2…2.5
	2 identical conductors	**mm²**	0.2…1.5
Flexible cable with cable end			
Without insulated ferrule	1 conductor	**mm²**	0.25…2.5
	2 identical conductors	**mm²**	0.25…1
With insulated ferrule	1 conductor	**mm²**	0.25…2.5
	2 identical conductors (1)	**mm²**	0.5…1.5
Solid cable without cable end	1 conductor	**mm²**	0.2…2.5
	2 identical conductors	**mm²**	0.2…1
Conductor size	1 conductor		AWG24 to AWG12
Tightening torque		**N.m**	0.5…0.6
Flat screwdriver		**mm**	3

Input characteristics

Operational voltage	**V**	⎓ 24
Logic inputs		Logic state 1: I ⩾ 6 mA - 16 V Logic state 0: I ⩽ 1.5 mA - 5 V

Discrete output characteristics

Base controller type			**LUTM10BL**	**LUTM20BL**
Type			Single break volt-free contacts	
Load	a.c. supply		C 300	B 300
	d.c. supply		24 V/5 A	24 V/5 A
Permissible power in cat. AC-15	For 500 000 operating cycles	**VA**	180	500
Permissible power in cat. DC-13	For 500 000 operating cycles	**W**	30	30
Associated protection		**A**	gG fuse, 4	gG fuse, 4
Used with contactor type (2)			Control voltage ⎓ 24 V: LP1K, LC1D09…D95. Control voltage ∿ 24…240 V: LC1K, LC1D.	Control voltage ∿ 100…240 V: LC1K, LC1D, LC1F185…F500

Characteristics of external current transformers LUTC●●●1

Precision			Class 5P			
Precision limit factor			10			
Maximum operating temperature		**°C**	70			
Transformer ratio			50/1	100/1	200/1	400/1	800/1
Diameter of conductor passage hole		**mm**	22	35	32	–	–
Maximum wire c.s.a.		**mm²**	30 x 10	40 x 10	65 x 32	38 x 127	53 x 127

(1) Use a double cable end.
(2) For other combinations, use an intermediate relay between the output of controller LUTM and the contactor coil.

References:
pages C1/2 and C1/3

Dimensions, mounting:
page C1/20

Schemes:
page C1/21

Dimensions, mounting

Controllers

LUTM●0BL

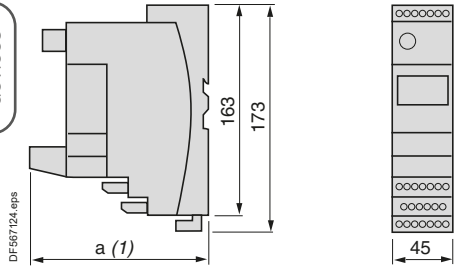

Rail mounting

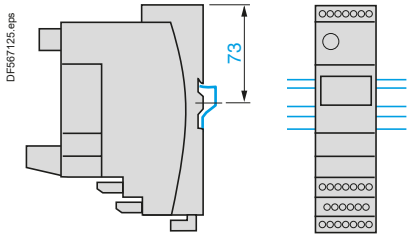

Rail mounting

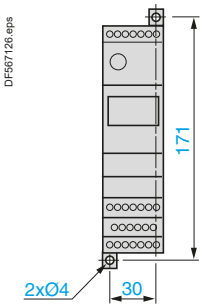

	a
With Modbus module	135
With Advantys STB, CANopen or DeviceNet modules	147

(1) Depth with communication module.

Current transformers

LUTC0501…1001

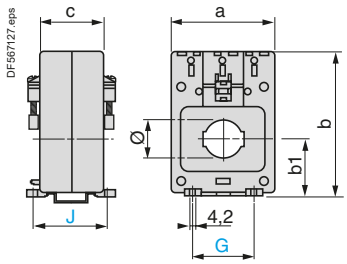

LUTC2001…8001

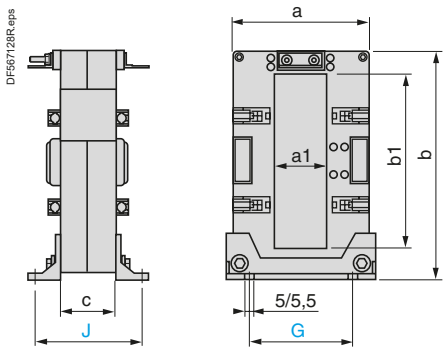

LUTC	a	b	b1	c	Ø	G	J
0501	56	84	31	42	23	45	50
1001	77	107	42.5	46	35	45	54

LUTC	a	b	b1	c	Ø	G	J
2001	90	32	94	55	40	62	62
4001	99	38	160	127	40	75	65
8001	125	54	160	127	40	100	65

Characteristics:
pages C1/16 to C1/19

References:
pages C1/2 and C1/3

Schemes:
page C1/21

Life Is On Schneider Electric

Schemes

Reversing controller LUTM

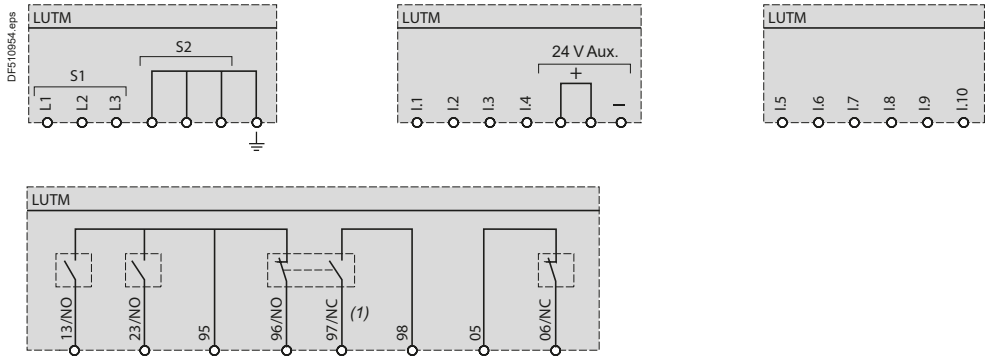

3-wire control, pulsed start with maintaining contact

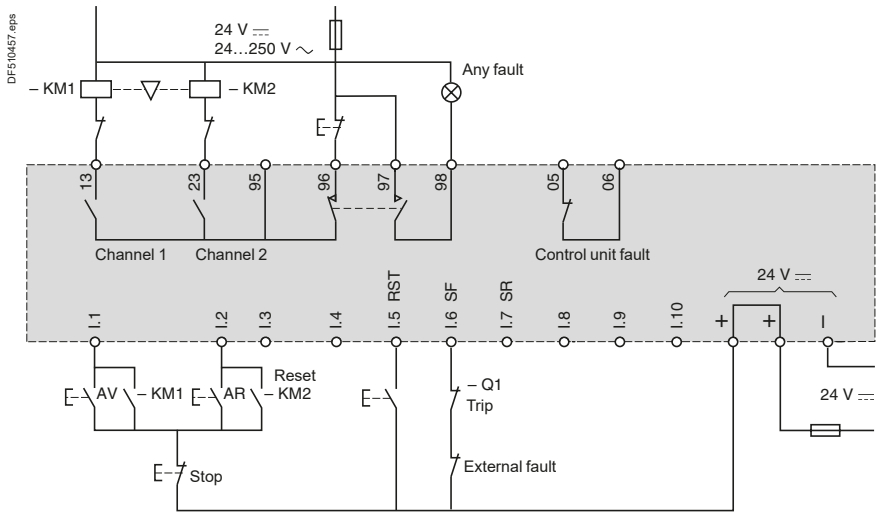

Control for Modbus communication module LULC033

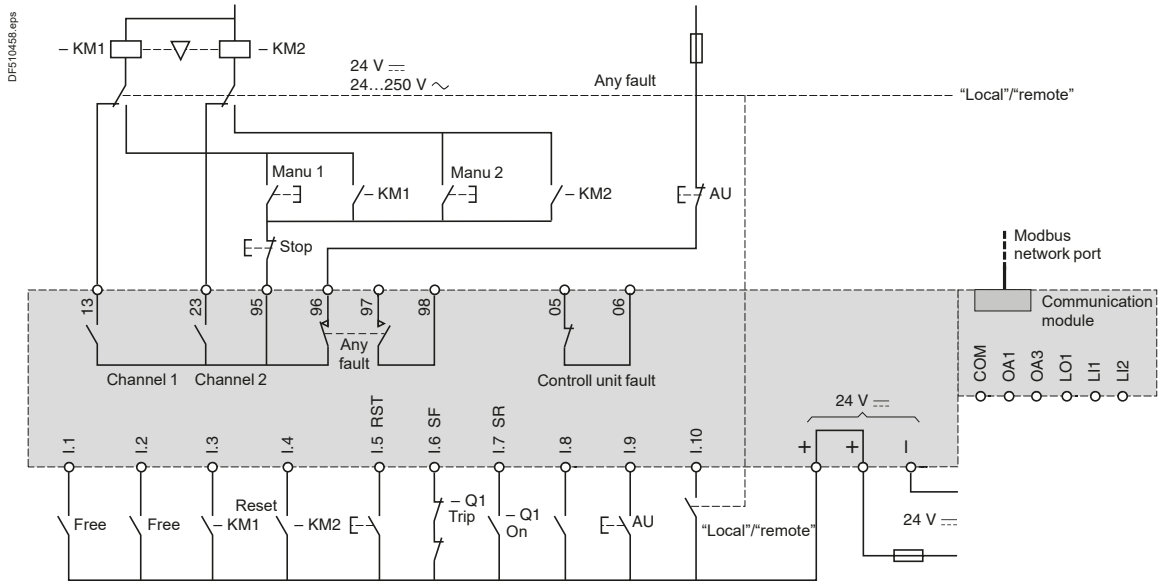

(1) The contacts are represented with controller powered up and not in a fault condition.

Characteristics:
pages C1/16 to C1/19

References:
pages C1/2 and C1/3

Dimensions, mounting:
page C1/20

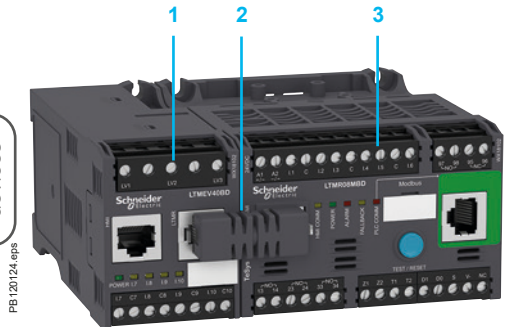

PB120124.eps

1 LTMEV40BD extension module
2 LTMCC004 2 x RJ45 jumper
3 LTMR08MBD controller

Introduction

TeSys T is a motor management system that provides protection, metering and monitoring functions for single-phase and 3-phase, constant speed, a.c. motors up to 810 A.

Suitable for the harshest applications, this product range offers:
- high-performance multifunction protection, independent of the automation system
- a local HMI control unit for reading, displaying and modifying the parameters monitored, diagnostics, etc.
- configuration using SoMove software
- connection to the automation system via a communication network (selection according to various protocols).

Application

The TeSys T motor management system is used for motor control and protection in harsh industrial applications, in which downtime must be avoided because it is very costly: Oil & Gas, chemical industry, water treatment, metal, minerals and mining, pharmaceutical industry, microelectronics, tunnels, airports etc.

With TeSys T motor management system, unexpected stops of a process or manufacturing, associated with a motor, are anticipated via predictive analysis of fault situations. Fault tripping is therefore reduced to a minimum.

Its use in motor control panels makes it possible to:
- increase the operational availability of installations
- improve flexibility from project design through to implementation
- increase productivity by making available all information needed to run the system.

The motor management system integrates perfectly with Schneider Electric low voltage equipment, such as Okken, Blokset and Prisma.

PB123812.eps

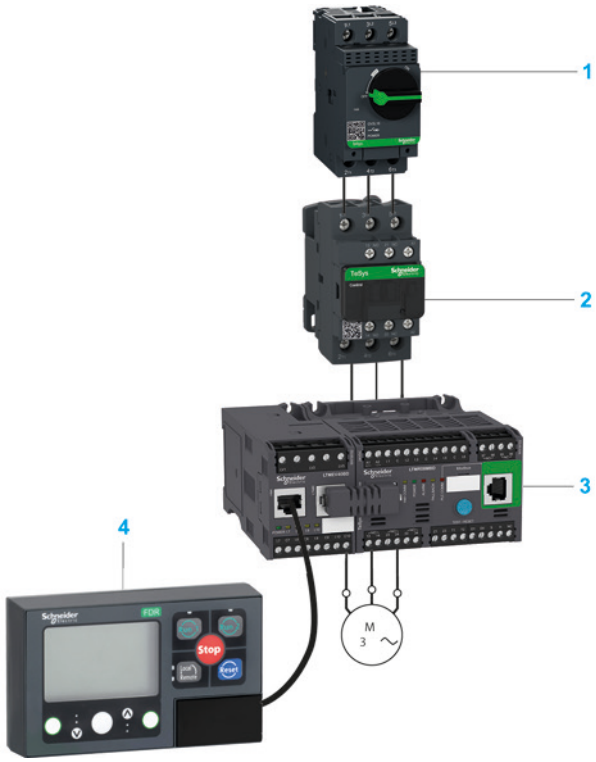

1 Magnetic Circuit breaker
2 Contactor
3 Controller with extension module
4 Operator control unit

References:
pages C1/4 to C1/11
Curves:
page C1/37
Dimensions, mounting:
pages C1/38 to C1/39
Schemes:
pages C1/40 to C1/43


PB121434.eps

LTMR08MBD


PB121436.eps

LTMEV40BD


PB112374.eps

LTMCUF

Introduction

Composition of the motor management system

The system comprises:
- an LTMR motor management controller
  - with internal current transformer up to 100 A
  - above 100 A, by external current transformer up to 810 A
- an LTME extension module
- an LTMCU operator control unit
- configuration software incorporated in the SoMove software application
- accessories for system set-up.

Communication

The LTMR controller is equipped with a communication interface to allow remote monitoring and control of the motor. All motor information is then available at automation system level.

The following networks are available:
- Modbus, CANopen, DeviceNet, ProfiBus DP and Ethernet TCP/IP (with two communication protocols, Modbus/TCP and EtherNet/IP).

T system functions

Protection functions

- against thermal overload
- against phase imbalance and phase failure
- thermal motor protection via PTC probes
- against phase reversal
- against earth faults
- against long starting times and motor stalling
- against automatic load shedding and restarting
- against load fluctuations (I, U, P)
- against variations of Cos φ (power factor).

Metering functions

- Measurements (rms values):
  - current on the 3 phases
  - voltage on the 3 phases (shedding)
  - motor temperature
  - earth fault.
- Values calculated:
  - average current
  - frequency
  - Cos φ (power factor), power, power consumption...

Motor control functions

A motor managed by TeSys T motor management system can be controlled:
- locally, using the logic inputs present on the product, or via the HMI terminal
- remotely, via the network (connection by terminal block or connector except for DeviceNet: terminal block only).

Motor control modes

5 predefined motor control modes are incorporated in the controller:
- overload mode: monitoring of motors whose control is not managed by the controller,
- independent mode: starting of non-reversing motors,
- reverser mode: starting of reversing motors,
- 2-step mode: 2-step starting of motors (star-delta, by autotransformer and by resistor),
- 2-speed mode: 2-speed starting of motors (Dahlander, pole changer).

A 6th "Custom" mode is available to allow the user to create a specific motor control mode that is not predefined in the controller.

Statistical and diagnostic functions

- Fault statistics: counters per type of protection and history of the last 5 faults.
- Motor statistics: saving of motor statistics values.
- Diagnosis of faults affecting correct operation of the product.

References: pages C1/4 to C1/11 | Curves: page C1/37 | Dimensions, mounting: pages C1/38 to C1/39 | Schemes: pages C1/40 to C1/43

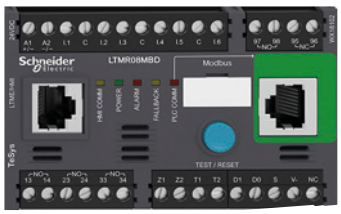

PB121447.eps

LTMR●●

Controller ref. LTMR

The controller is the central component in the motor management system.
It manages the basic functions such as:
- measurement of 3-phase current via integral current transformers from 0.4 to 100 A (up to 810 A by external current transformers)
- measurement of earth current by external earth fault toroid
- measurement of motor temperature by PTC probe
- inputs and outputs for the various motor control modes, fault management and associated functions.

Characteristics

Supply
2 types of controller power supply are available:
- 24 V⎓
- 100…240 V∿.

Current ranges
3 current ranges allow measurement of motor current from 0.4 to 100 A:
- 0.4…8 A
- 1.35…27 A
- 5…100 A.

For use with external current transformers, choose the 0.4…8 A range (1 or 5 A current transformer secondary).

Inputs
- 6 discrete logic inputs.

Outputs
- 3 relay logic outputs (1N/O).
- 1 relay output for fault signalling (1N/O + 1N/C).

Measurements
- Connections for a temperature probe.
- Connections for an earth fault toroid.

Extension module ref. LTME

The extension module adds the following functionalities to the T controller:
- voltage measurement on the 3 phases. This enables it to calculate numerous engine monitoring parameters (power, frequency, Cos φ…)
- 4 additional inputs.

Characteristics

Inputs
- 4 discrete logic inputs (independent).

Power supplies
- 2 types of power supply for the inputs: 24 V⎓ and 100…240 V∿.
  - A 24 V⎓ expansion module can be assembled with a 24 V⎓ controller or with a 100…240 V∿ controller.
  - A 100…240 V∿ expansion module can be assembled with a 100…240 V∿ controller.

Voltage measurement between phases up to 690 V nominal.

Life Is On Schneider Electric



PB121448.eps

LTMCU

Human/Machine Interfaces (HMI)

Depending on the application, 2 types of HMI can be used with the LTMR controller.
- The LTMCU operator control unit:
  - entirely dedicated to the T range
  - only for control/monitoring of an LTMR controller.
- A Magelis XBTN410 terminal for control/monitoring of 1 to 8 LTMR controllers.

Operator control unit ref. LTMCU

Dedicated exclusively to T controllers, control unit LTMCU makes it possible to:
- configure the parameters of the LTMR controller
- display information on controller configuration and operation
- monitor the alarms and faults generated by the controller
- local control of the motor via the local control interface (keys can be customised). Three different languages can be loaded into the LTMCU controller at the same time.

By default, these 3 languages are:
- LTMCU: English, French and Spanish

Note: *English is the only compulsory language.*

A language download utility (LangTool), together with all the other languages, are available on the website “www.se.com”.
This tool allows the languages present in the LTMCU control unit to be adapted.

The LTMCU HMI control unit has an RJ45 port, protected by a flexible cover to provide a good level of protection (IP54).
This port on the front panel allows connection to a PC, via a connecting cable, in order to use SoMove software.
In this case, the control unit acts as a transmitter and all information can then be viewed in SoMove.
The LTMCU HMI can be used as a portable version by using the separate kit LTM9KCU. This kit consists of two snap-on plastic shells (tool-free mounting) fitted with a simple fixing system that uses magnets for mounting on all types of metal surfaces.

The Magelis XBT N410 HMI terminal

Two applications have been predefined for T motor management system.
Depending on the application loaded, the HMI terminal makes it possible to:
- configure and monitor a motor starter (LTM_1T1_V1.dop)
- monitor and modify certain parameters on up to 8 motor starters (LTM_1T8_X_V1.dop) (1).

XBTL1000 programming software is needed for loading applications into the HMI terminal.
These applications are available on the website “www.se.com”.

(1) Replace the X with an E for the English version, or an F for the French version.

Motor management devices
Ref.

Characteristics

Controllers ref. LTMR

Modbus

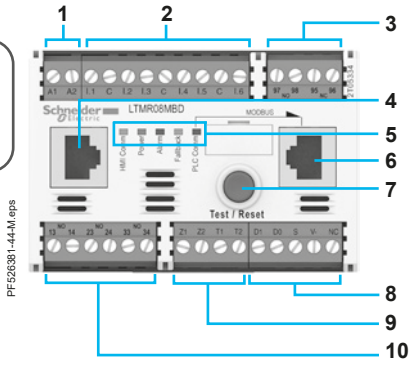

DeviceNet

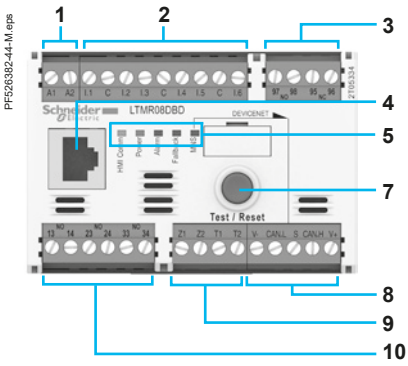

Profibus DP

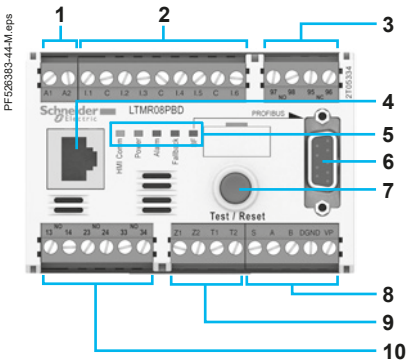

CANopen

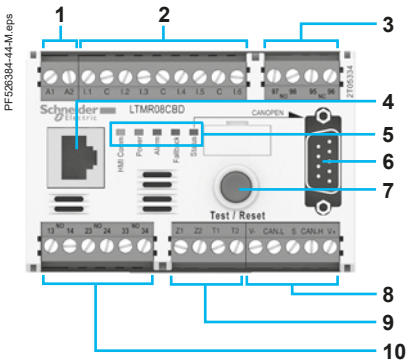

Ethernet TCP/IP (communication protocols: Modbus/TCP and EtherNet/IP)

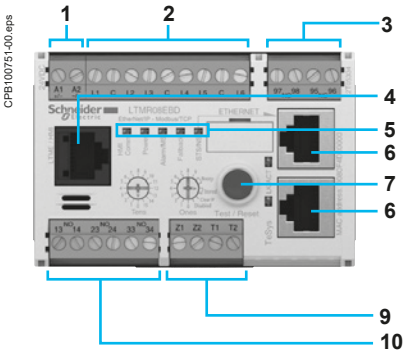

Controllers feature the following on their front panel:

1 Controller power supply.
2 Input connections.
3 Fault outputs (N/O+N/C).
4 Port for connection to the HMI terminal, a PC or an extension module (RJ45).
5 Controller status LEDs.
6 Network port for connection to the network by connector (except DeviceNet) (1).
7 Test/Reset button.
8 Connection to the network by terminal block (except Ethernet TCP/IP).
9 Connection for an earth fault toroid and temperature probes.
10 Outputs for motor control mode function.

(1) Connection using power extension (daisy-chaining) is possible for Ethernet TCP/IP.

Extension modules ref. LTMEV40●●

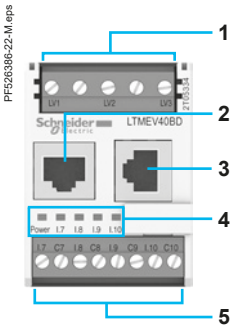

Extension modules have the following on their front face:
1 Inputs for voltage measurement.
2 Port for connection to the HMI terminal or to the PC.
3 Port for connection to the controller.
4 Extension module status LEDs.
5 Connection of additional inputs.

Operator control unit ref. LTMCU

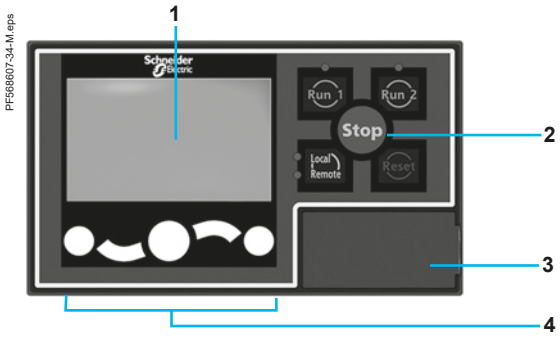

The control unit has the following on its front face:
1 Screen LCD display.
2 Local control interface including control keys and LEDs.
3 RJ45 port on front panel for connection to a PC (protected by a cover).
4 Contextual navigation keys.

References: pages C1/4 to C1/11
Curves: page C1/37
Dimensions, mounting: pages C1/38 to C1/39
Schemes: pages C1/40 to C1/43

Thermal and current protection functions

Functions Description	Setting range	Controller LTMR	Controller and extension module (LTMR + LTME)	Alarm threshold	Fault threshold
Thermal overload: thermal protection of motor by monitoring current consumption	Class: 5, 10, 15, 20, 25, 30. Inverse ther/definite time				
Motor temperature: thermal monitoring of the motor using temperature probes (winding, paper...). Up to 3 sensors in series.	PTC binary PTC/NTC analogue: 20 …6500 Ohm				
Phase imbalance: monitors the symmetry of currents. To be used for imbalance < 80 % of the average current (1).	10…70% I average 0.2…20 s				
Phase failure: monitors the symmetry of currents. To be used for imbalance < 80 % of the average current (1).	0.1…30 s				
Phase reversal: signals when the phase sequence is different from the defined sequence (motor running).	A-B-C A-C-B				
Long starting time: monitors the motor starting time	100…800 % of FLC (2) 1…200 s				
Locked rotor: locking detected by a sudden increase in current after the start phase	100…800 % of FLC (2) 1…30 s				
Min/max current load limit variations: monitors motor load through variations of current around preset thresholds.	min.: 30…100 % of FLC (2) 1…200 s max.: 20…800 % of FLC (2) 1…250 s				
Earth fault: signals internal insulation faults, by vectorial summing of external currents, via earth fault toroid.	internal: 50…500 % min FLC (2) 0.5…25 s external: 0.02…21 A 0.1…25 s				
Frequent starting: Protects the motor against overheating due to frequent starting.	0…999.9 s				

Voltage and power protection functions

Phase imbalance: monitors the symmetry of voltage between phases. To be used for imbalance < 40 % of the average voltage (3).	3…15 % 0.2…20 s				
Phase failure: monitors the symmetry of voltage between phases. To be used for imbalance > 40 % of the average voltage (3).	0.1…30 s				
Phase reversal: signals when the phase sequence is different from the defined sequence (motor stopped).	A-B-C A-C-B				
Voltage variations. Min/max voltage limits: monitors voltage variations around preset thresholds.	min.: 70…99 % 0.2…25 s max.: 101…115 % 0.2…25 s				
Load shedding: opens outputs O.1 and O.2 if voltage drops below a preset threshold.	68…115 % 1…9999 s				
Power variations. Min/max power limits: monitors power variations around preset thresholds.	20…800 % 1…100 s				
Variations of Cos φ. Min/max limits of Cos φ: monitors variations of Cos φ around preset thresholds.	0…1 s 1…25 s				

Function performed.

(1) Average current value measured on the 3 phases.
(2) FLC: Full Load Current (setting current).
(3) Average voltage value measured on the 3 phases.

References: pages C1/4 to C1/11
Curves: page C1/37
Dimensions, mounting: pages C1/38 to C1/39
Schemes: pages C1/40 to C1/43

Characteristics

Motor control functions

Functions	Description	With controller LTMR	With controller LTMR and extension module LTME
Control modes	Local, via terminal block	■	■
	Local, via HMI terminal (1)	■	■
	Remote, via network	■	■
Operating modes	Overload	■	■
	Independent	■	■
	Reverser	■	■
	2-step	■	■
	2-speed	■	■
	"Custom" mode	■	■
Fault management	Manual reset	■	■
	Automatic reset	■	■
	Remote reset	■	■

Metering functions and statistics

Functions	Description	Measurement range	With controller LTMR	With controller LTMR and extension module LTME
Measurements (2)	Current/Phase	0.08…1000 A	■	■
	Earth current	0.1633 x CT ratio	■	■
	Average current	0.08…1000 A	■	■
	Current imbalance between phases	0…200 %	■	■
	Thermal capacity level	0…200 %	■	■
	Motor temperature rise	0…6500 Ohm	■	■
	Frequency	0… 100 Hz		■
	Voltage between phases	∼ 0…830 V		■
	Voltage imbalance between phases	0…200 %		■
	Active power	0…6553.5 kW		■
	Reactive power	0…6553.5 kWr		■
	Cos φ (power factor)	0…100		■
	Active power consumption	0…400 kWh		■
	Reactive power consumption	0…400 kWrh		■
Fault statistics	Protection fault counters		■	■
	Protection alarm counters		■	■
	Diagnostic fault counters		■	■
	Motor control function counters		■	■
	Fault history		■	■
Fault diagnostics	Internal watchdog fault		■	■
	Controller internal temperature		■	■
	Temperature sensor connection		■	■
	Current connection		■	■
	Voltage connection			■
	Motor control commands (start, stop, run check back and stop check back)		■	■
	Control configuration checksum		■	■
	Loss of communication		■	■
Motor statistics	Number of motor control commands (O.1/O.2 starts)		■	■
	Operating time		■	■
	Number of starts/hour		■	■
	Last start I max.		■	■
	Duration of last start		■	■
Thermal overload statistics	Time to trip		■	■
	Time to restart		■	■
System operating statistics	Run, ON, Start, alarm, fault.		■	■

(1) HMI: Human Machine Interface.
(2) See measurement details page C1/34.

References: pages C1/4 to C1/11
Curves: page C1/37
Dimensions, mounting: pages C1/38 to C1/39
Schemes: pages C1/40 to C1/43

Life Is On Schneider Electric

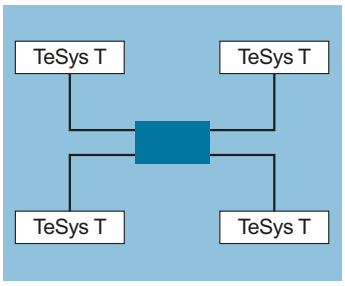

Star topology

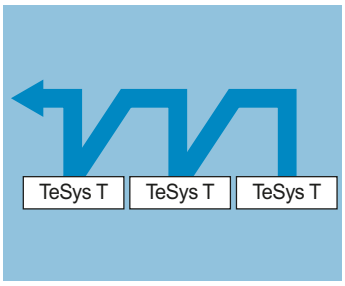

Daisy chain topology

Star topology

In a star topology, all the peripherals are linked via an intermediate peripheral (hub or switch).

In industrial Ethernet applications, the use of full duplex switches (instead of hubs) as central peripherals is strongly recommended.

Daisy chain topology

Daisy chaining, at bus level, is another connection topology commonly used in industrial automation system networks. The cable segments link several peripherals to each other, constituting the peripheral "section" of the network cable.

Ref.

References:
pages C1/4 to C1/11

Curves:
page C1/37

Dimensions, mounting:
pages C1/38 to C1/39

Schemes:
pages C1/40 to C1/43

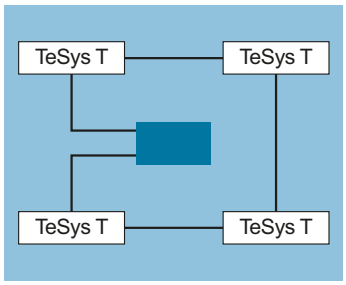

Ring topology

Ethernet: different network topologies

Ring topology

In a ring topology, all the peripherals or components of the network infrastructure are connected within a loop.
This type of topology makes it possible to achieve different levels of redundancy of the network.

Ethernet ring

Ethernet rings are generally the main networks in applications where a high level of reliability is required. If a ring topology is required, the switches handling this function must be used.

Redundancy

Redundancy of the network infrastructure is the key to development of applications with high operational reliability.
Implementing a single or double ring architecture makes it possible to provide protection against breaks in network segments.

Single ring

The first level of redundancy can be achieved by installing a single ring.
ConneXium switches can be used to establish main network ring configurations.
The ring is created using RSTP protocol.
If a section of the line fails, the ring structure converts into a line type configuration.

Ethernet: different communication protocols

LTMR controllers communicating over an Ethernet network can communicate either using the Modbus/TCP communication protocol or using the EtherNet/IP communication protocol. Both protocols are loaded in the controller. One must be selected for the operation.

Note: *EtherNet/IP communication protocol is supported by ODVA, also promoter of DeviceNet communication solution. Note that in EtherNet/IP, IP stands for Industrial Protocol.*

■ IP address Class for Ethernet TCP/IP version: Class A 20 ETH10/100.

Services available on Ethernet TCP/IP version		
	In Modbus/TCP	In Ethernet/IP
Web Server	■	■
Modbus messaging	■	
IO Messaging		■
Explicit Messaging		■
Client FDR	■	■
SNMP network administrator	■	■
RSTP	■	■
Discovery	■	■
Master IP	■	■
Broadcast Storm Protection	■	■

References:
pages C1/4 to C1/11
Curves:
page C1/37
Dimensions, mounting:
pages C1/38 to C1/39
Schemes:
pages C1/40 to C1/43

Life Is On Schneider Electric

Possible configurations and applications

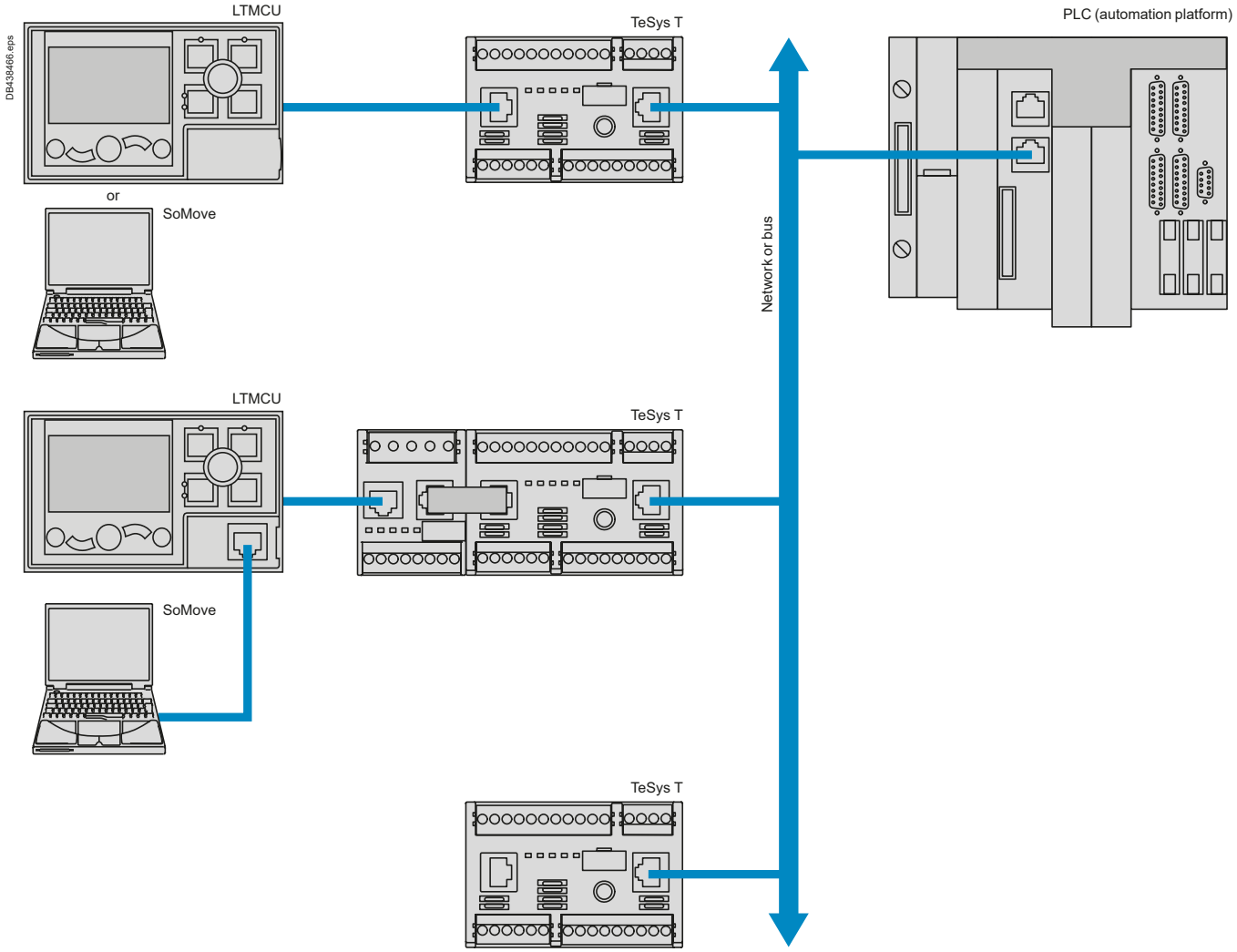

Ref.

References:
pages C1/4 to C1/11
Curves:
page C1/37
Dimensions, mounting:
pages C1/38 to C1/39
Schemes:
pages C1/40 to C1/43

PB113436.eps

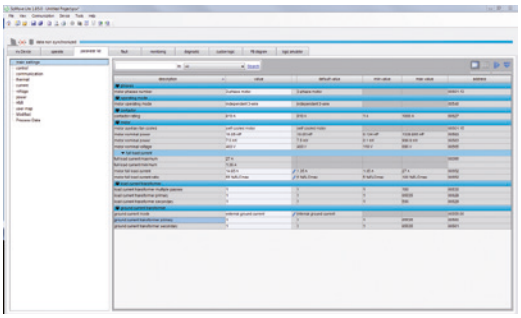

Example of T configurator setup screen

Configuration with SoMove

The T configurator is incorporated in the SoMove software application, as from version 2.5. (1)
It allows configuration, commissioning and maintenance of motor starters protected by TeSys T motor management system.

A library containing predefined motor control mode functions is available in order to:
- allow standardisation
- avoid errors
- reduce motor starter setup times.

5 predefined motor control modes are incorporated in the controller:
- overload mode: monitoring of motors whose control is not managed by the controller
- independent mode: starting of non-reversing motors
- reverser mode: starting of reversing motors
- 2-step mode: 2-step starting of motors (star-delta, by autotransformer and by resistor)
- 2-speed mode: 2-speed starting of motors (Dahlander, pole changer).

By using logic functions, a "Custom" mode makes it possible to:
- easily adapt these predefined motor control mode functions to the specific needs of your applications
- create a link with the motor starter environment or
- create new functions.

The functions thus defined can be saved and used to build your function library for future applications.
To create special functions, a logic editor is incorporated in the configurator and allows a choice of 2 programming languages:
- function block
- structured text.

(1) An update file is available, free of charge, on the website "www.se.com". It will enable you to take advantage of the latest functions in the T motor management system.

Life Is On Schneider Electric

Characteristics

Environment

Product type			LTMR controllers		LTMEV40●● extension modules	
Conforming to standards			IEC/EN 60947-4-1, UL60947-4-1A, CSA 22-2 n°60947-4-1, IACS E10			
Product certifications			UL, CSA, CE, CCC, UKCA, EAC/GOST, RCM/CTIC'K, Atex, Marine (BV, LROS, DNV, RINA, ABS) (1)			
Rated insulation voltage of the outputs (Ui)	Conforming to IEC/EN 60947-1, overvoltage category III, degree of pollution 3	V	690			
	Conforming to UL 508, CSA C222 n° 14	V	690			
Rated impulse withstand voltage (Uimp)	Conforming to IEC/EN 60947-4-1					
	∿ 100…240 V supply, inputs and outputs	kV	4		4	
	⎓ 24 V supply, inputs and outputs	kV	0.8		0.8	
	Communication circuits	kV	0.8		–	
	Current or voltage measurement circuit	kV	6		6	
Short-circuit withstand	Conforming to IEC/EN 60947-4-1	kA	100			
Climatic withstand	Conforming to IEC/EN 60068-2-30		12 x 24 hour cycles			
	Conforming to IEC/EN 60070-2-11	h	48			
Ambient air temperature around the device	Storage	°C	- 40…+80			
	Operation	°C	- 20…+60			
Operating position without dating	In relation to normal vertical mounting plane		±30° in relation to mounting plate, ±90° 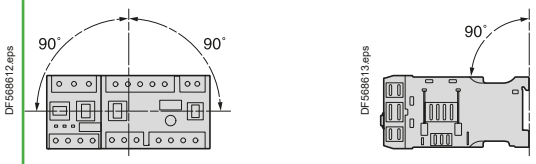			
Flame resistance	Conforming to UL 94	°C	960 (for parts supporting live components)			
	Conforming to IEC/EN 60695-2-12	°C	650 (for other parts)			
Shock resistance (1/2 sine wave, 11 ms)	Conforming to IEC/EN 60068-2-27 (2)		15 gn			
Vibration resistance	Conforming to IEC/EN 60068-2-6 (2) 5…300 Hz		4 gn (plate mounted) 1 gn (mounted on ⊥ rail)			
Resistance to electrostatic discharge	Conforming to IEC/EN 61000-4-2	kV	In open air: 8 - Level 3 On contact: 6 - Level 3			
Immunity to radiated electromagnetic interference	Conforming to IEC 61000-4-3	V/m	10 - Level 3			
Immunity to fast transient bursts	Conforming to IEC 61000-4-4	kV	On supply and relay outputs: 4 - Level 4 Other circuits: 2 - Level 3			
Immunity to radioelectric fields (3)	Conforming to IEC/EN 61000-4-6	V	10 - Level 3			
Immunity to dissipated shock waves	Conforming to IEC/EN 61000-4-5		**Common mode**	**Serial mode**	**Common mode**	**Serial mode**
	Relay outputs and supply	kV	4	2	–	–
	⎓ 24 V inputs	kV	1	1	1	1
	∿ 100…240 V inputs	kV	2	1	2	1
	Voltage inputs	kV	–	–	4	2
	Communication	kV	2	–	2	–
	Temperature sensor (IT1/IT2)	kV	1	0.5	–	–

Altitude derating		**2000 m**	**3000 m**	**3500 m**	**4000 m**	**4500 m**
	Rated operational voltage (Ui)	1	0.93	0.87	0.8	0.7
	Max. operating temperature	1	0.93	0.92	0.9	0.88

(1) Certain certifications are pending; please consult your Customer Care Centre.
(2) Without modifying the contact states, in the most unfavorable direction.
(3) This product has been designed for use in environment A and in B, it may cause unwanted electromagnetic disturbance to other devices, which may require the implementation of adequate mitigation measures.

References: pages C1/4 to C1/11 | Curves: page C1/37 | Dimensions, mounting: pages C1/38 to C1/39 | Schemes: pages C1/40 to C1/43

Characteristics

Controller and extension module characteristics

Product type				Controllers		Extension modules	
				LTMR●●●BD	LTMR●●●FM	LTMEV40BD	LTMEV40FM
Control supply							
Operational voltage (U)	Conforming to IEC/EN 60947-1		V	⎓ 24	∿ 100…240	–	
Resistance to voltage dips	Conforming to IEC/EN 61000-4-11		V	0 for 3 ms 70 % of U for 500 ms		–	
Associated protection			A	gG fuse, 0.5		–	
Operational voltage	Limit values		V	⎓ 20.4…26.24	∿ 93.5…264	–	
Current consumption	50/60 Hz		mA	⎓ 56…127	∿ 8…62.8	–	
Connectors	Pitch		mm	5.08		5.08	
Flexible cable without cable end	1 conductor		mm²	0.2…2.5		0.2…2.5	
	2 identical conductors		mm²	0.2…1.5		0.2…1.5	
Flexible cable with cable end							
Without insulated ferrule	1 conductor		mm²	0.25…2.5		0.25…2.5	
	2 identical conductors		mm²	0.5…1.5		0.5…1.5	
With insulated ferrule	1 conductor		mm²	0.25…2.5		0.25…2.5	
	2 identical conductors		mm²	0.2…1		0.2…1	
Solid cable without cable end	1 conductor		mm²	0.2…2.5		0.2…2.5	
	2 identical conductors		mm²	0.2…1		0.2…1	
Conductor size				AWG24 to AWG14		AWG24 to AWG14	
Tightening torque			N.m	0.5…0.6		0.5…0.6	
Flat screwdriver			mm	3		3	
Input characteristics							
Nominal values	Conforming to IEC/EN 61131-1			Type 1 positive logic (⎓: resistive, ∿: capacitive)			
	Voltage		V	⎓ 24	∿ 100…240	⎓ 24	∿ 100…240
	Current		mA	⎓ 7	∿ 3.1 for 100 V ∿ 7.5 for 240 V	⎓ 7	∿ 3.1 for 100 V ∿ 7.5 for 240 V
Logic inputs	Logic state 1	Voltage	V	15 min	79 < U < 264	15 min	79 < U < 264
		Current	mA	2 min…15 max	2 min at 110 V… 3 min at 220 V	2 min…15 max	2 min at 110 V… 3 min at 220 V
	Logic state 0	Voltage	V	5 max	0 < U < 40	5 max	0 < U < 40
		Current	mA	15 max	15 max	15 max	15 max
Response time	Change to state 1		ms	15	25	15	25
	Change to state 0		ms	5	25	5	25
Output characteristics							
Type				Volt free, single break			
Load	∿			250 V / 5 A B300			
	⎓			30 V / 5 A			
Permissible power in cat. AC-15	For 500 000 operating cycles		VA	480 / Ie max: 2 A			
Permissible power in cat. DC-13	For 500 000 operating cycles		W	30 / Ie max: 1.25 A			
Associated protection			A	gG fuse, 4			
Max. frequency			Hz	2			
Max. operating level			op. cycles/h	1800			
Response time	Change to state 1		ms	10 max			
	Change to state 0		ms	10 max			
Measurement details							
Current				1 % for the 0.4…8 A and 1.35…27 A ranges 2 % for the 5…100 A range			
Voltage				1 % from 100 to 830 V			
Earth fault current	Internal measurement without earth fault toroid			5…15 % for current > 0.1 A in the 0.4…8 A range current > 0.2 A in the 1.35…27 A range current > 0.3 A in the 5…100 A range			
	External measurement with earth fault toroid			< 5 % or 0.01 A			
Temperature measurement				2 %			
Power factor				10 %			
Active and reactive power				15 %			
Internal clock				±30 min / year			

References: pages C1/4 to C1/11
Curves: page C1/37
Dimensions, mounting: pages C1/38 to C1/39
Schemes: pages C1/40 to C1/43

Bus and network characteristics

Type of bus/network	Modbus	CANopen	DeviceNet	Profibus DP	Ethernet
Physical interface	2-wire RS 485	ISO 11898	ISO 11898	polarised 2-wire RS 485	IEEE 802.3
Addressing	1 to 247	1 to 127	1 to 64	1 to 125	0 to 159 (1)
Transmission speeds	1.2 to 19.2 kb/s	10, 20, 50, 125, 250, 500, 800 and 1000 kb/s + Auto baud	125 to 500 kb/s	9.6 kb to 12 Mb/s	10/100 Mb/s, with automatic recognition
Connections	RJ45/terminal block	9-way SUB-D/ terminal block	Terminal block	9-way SUB-D/ terminal block	RJ45
Cables	2 shielded twisted pairs	4 twisted, shielded wires	4 twisted, shielded wires	2 shielded twisted pairs, type A	2 shielded twisted pairs

LTMCU operator control unit

Environment

Conforming to standards			IEC/EN 61131-2, UL60947-4-1A, CSA 22-2 n°60947-4-1
Product certifications			UL, CSA, CE, EAC/GOST, RCM/CTIC'K
Ambient air temperature around the device	Storage	°C	-40…+80
	Operation	°C	-20…+60
Relative humidity			15…95 % without condensation
Climatic withstand	Conforming to IEC/EN 60068-2-30		12 x 24 hour cycles
Degree of protection	Conforming to IEC 60947-1		IP54
Shock resistance	Conforming to IEC/EN 60068-2-27		15 gn / 11ms
Vibration resistance	Conforming to IEC/EN 60068-2-6 5…300 Hz		4 gn
Flame resistance	Conforming to IEC 60947-1	°C	650
	Conforming to UL 94		V2

Electrical characteristics

Supply to the product			Powered via the controller
Maximum current		mA	140
Maximum power dissipated		W	1
Resistance to electromagnetic discharge	Conforming to IEC/EN 61000-4-2	kV	In open air: 8. Level 3 On contact: 4. Level 3
Immunity to radiated electromagnetic interference	Conforming to IEC/EN 61000-4-3	V/m	10 - Level 3
Immunity to fast transient bursts	Conforming to IEC/EN 61000-4-4	kV	2, shielded access. Level 3
Immunity to radioelectric fields	Conforming to IEC/EN 61000-4-6	V	10. Level 3
Immunity to shock waves	Conforming to IEC/EN 61000-4-5	kV	2, shielded access. Level 3

Physical characteristics

Mounting			Flush mounted
Display			Backlit LCD
Signalling			By 4 LEDs
Cabling			RJ45

(1) For DHCP, stored IP, adressing limited by subnet mask.

References: pages C1/4 to C1/11
Curves: page C1/37
Dimensions, mounting: pages C1/38 to C1/39
Schemes: pages C1/40 to C1/43

Characteristics

LT6CT●●●● external current transformer characteristics

Conforming to standards		IEC 60185, BS 7626			
Precision		Class 5P			
Precision limit factor		15			
Rated insulation voltage (Ui)		690			
Maximum operating temperature	**°C**	50			
Transformer ratio	**A**	100/1	200/1	400/1	800/1
Diameter of conductor passage hole	**mm**	35	35	35	35
Maximum cabling c.s.a.	**mm²**	30 x 10	30 x 10	30 x 10	incorporated (1)

Earth fault toroid characteristics

Toroid type		**50437**	**50438**	**50439**	**50440**	**50441**	**50442**	**50485**	**50486**
Rated insulation voltage Ui	**V**	1000							
Operating temperature	**°C**	- 35…+ 70							
Protection index		IP30 (connections IP20)							
Transformer ratio		1/1000							
Rated operational current Ie	**A**	65	85	160	250	400	630	85	250
Max. conductor c.s.a. per phase	**mm²**	25	50	95	240	2 x 185	2 x 240	50	240

DA1TT●● probe characteristics

Conforming to standards			IEC 60034-11 mark A
Economy resistor	At 25 °C	Ω	3 x 250 in series
Rated operational voltage (Ue)	Per probe	**V**	⎓ 2.5 max
Rated insulation voltage (Ui)		**kV**	2.5
Insulation			Reinforced
Length of connecting cables	Between probes	**mm**	250
	Between probe and motor terminal plate	**m**	1

Guaranteed operating zones: example with 3 probes type DA1TT●●● (250 Ω at 25 °C) in series, conforming to standard EC 60034-11, mark A.

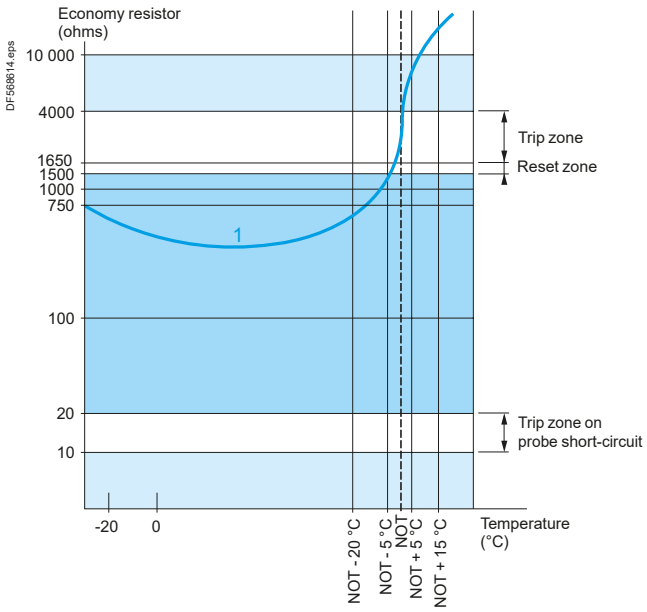

1 3 probes type DA1●●● (250 Ω at 25 °C) in series.

NOT: Nominal Operating Temperature.

Protection unit tripped.

Protection unit reset.

(1) Electrical connection to be made using M10 bolt.

Tripping curves

Cold state curves

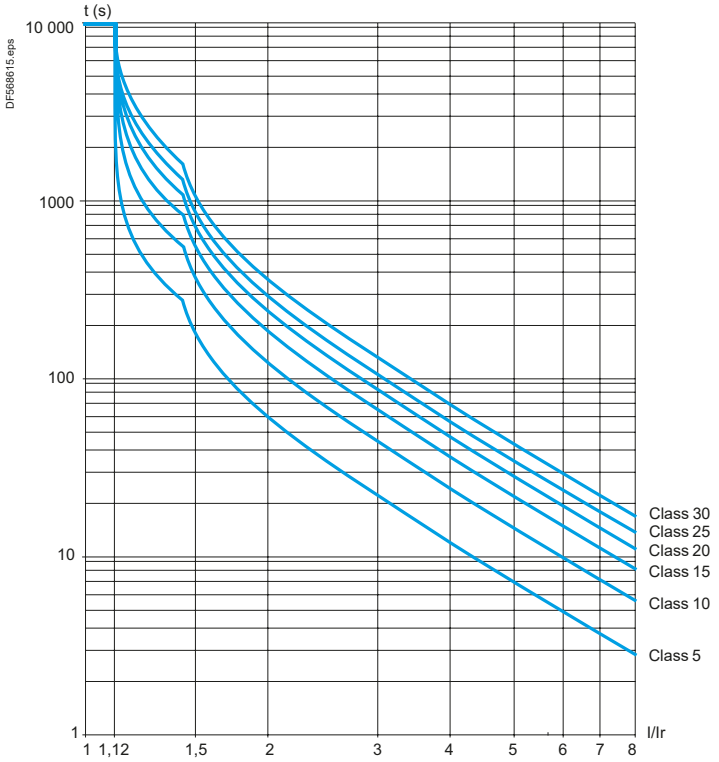

Hot state curves

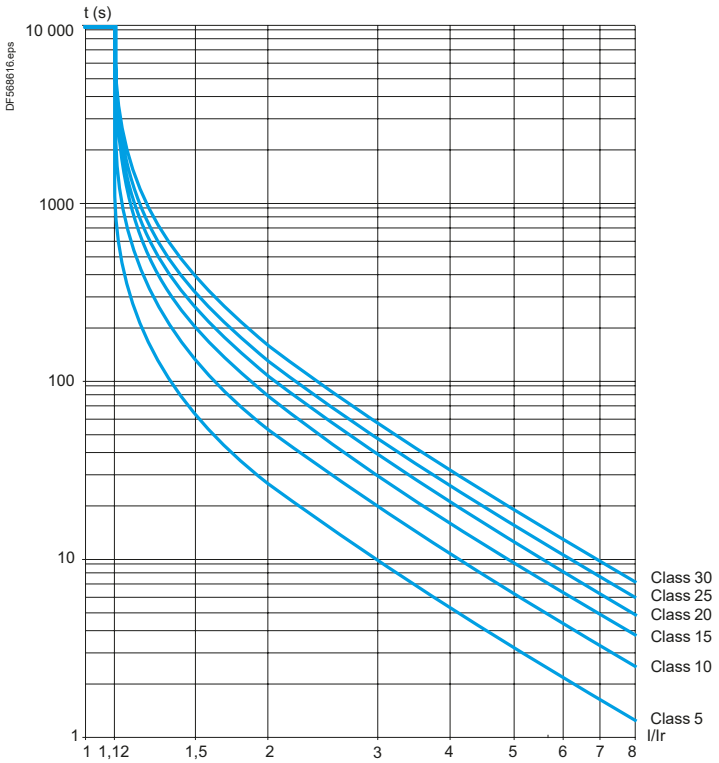

LTMR●● controllers

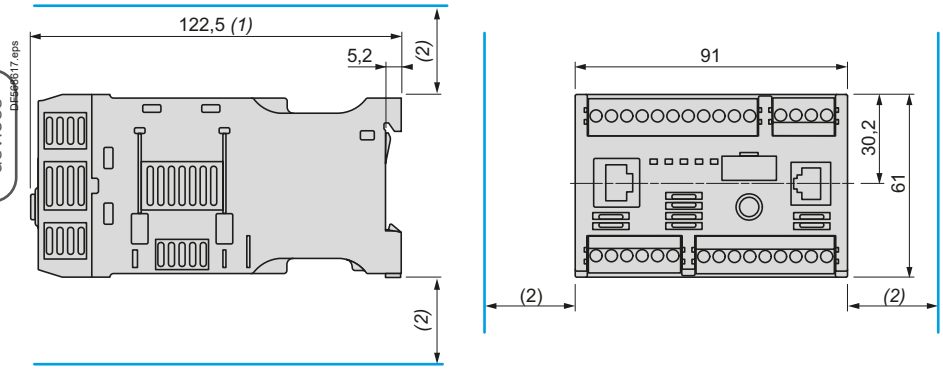

LTMEV40●● extension modules

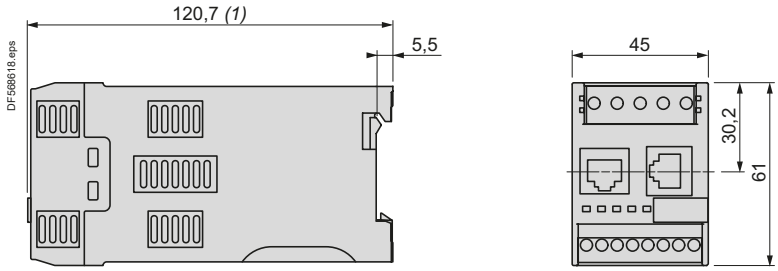

LTMCU operator control unit

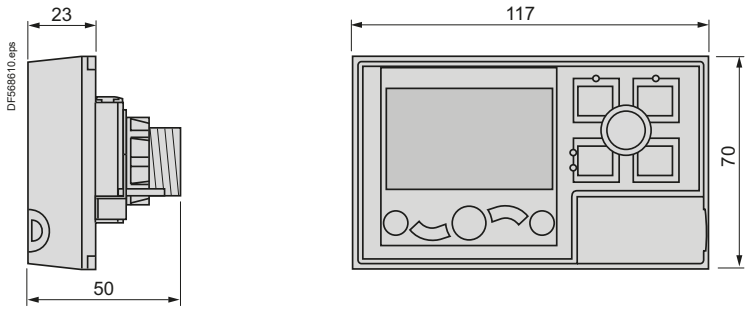

Panel mounting, cut-out

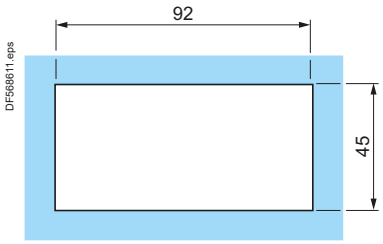

LTM9F

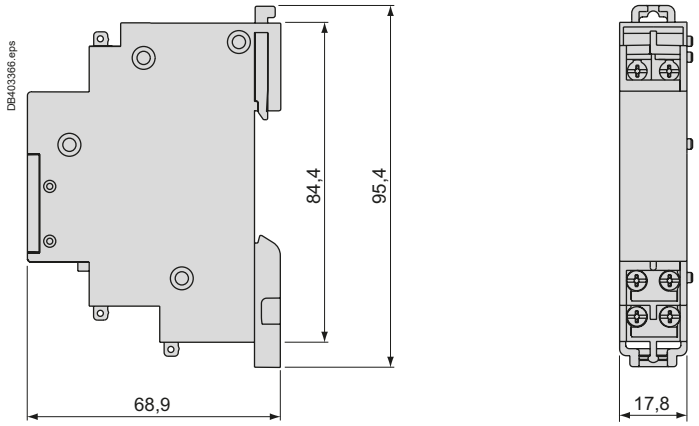

(1) 140 mm with RJ45 connector for connection to extension module and to network,
166 mm with Profibus DP/CANopen connector.
(2) Leave a gap around the device of: 9 mm at 45 °C, 9 to 40 mm from 45 to 50 °C, 40 mm at 60 °C.

References: pages C1/4 to C1/11
Characteristics: pages C1/22 to C1/36
Curves: page C1/37
Schemes: pages C1/40 to C1/43

Life Is On Schneider Electric

Dimensions

Current transformers

LT6CT

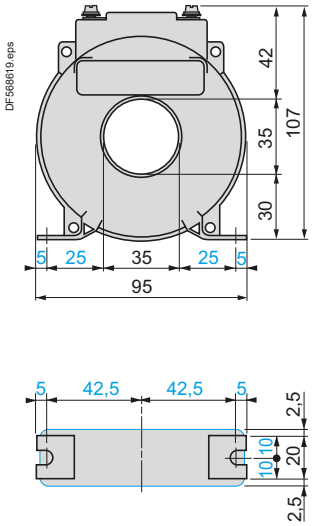

HMI terminal

XBTN410

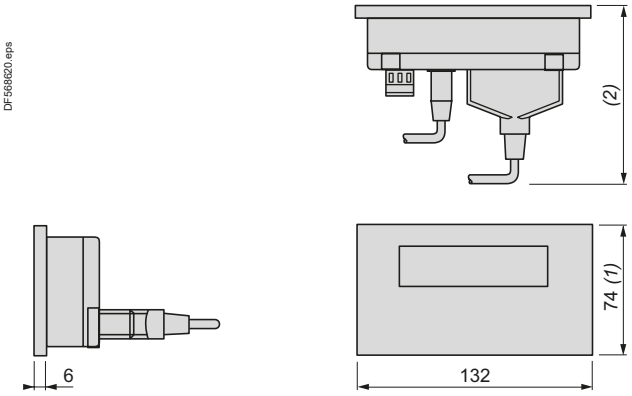

(1) 104 mm with fixing clips (supplied with the product).
*(2) 58 mm with SUB-D 25-way elbowed cable **XBTZ9680** for Twido, TSX Micro and Premium or **XBTZ998** for Advantys STB.*
*104 mm with SUB-D 25-way cable **XBTZ68/Z9681** for Twido, TSX Micro and Premium.*

Earth fault toroids

50437 and 50438

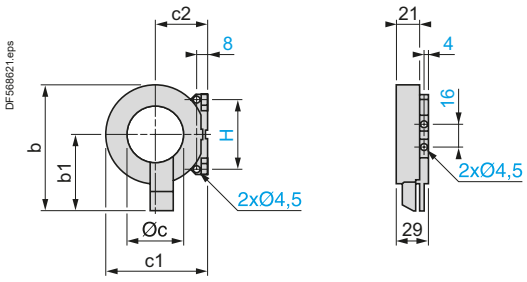

Type	b	b1	Øc	c1	c2	H
50437	83	53	30	60	31	50
50438	109	66	50	87	45	60

50439, 50440 and 50441

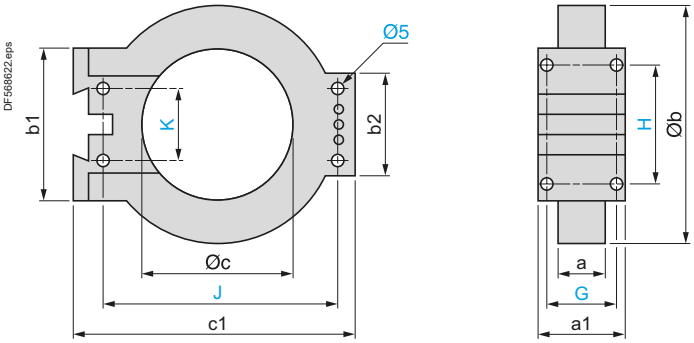

Type	a	a1	Øb	b1	b2	Øc	c1	G	H	J	K
50439	26.5	44	122	80	55	80	150	35	65	126	40
50440	26.5	44	164	80	55	120	190	35	65	166	40
50441	29	46	256	120	90	196	274	37	104	254	60

50442

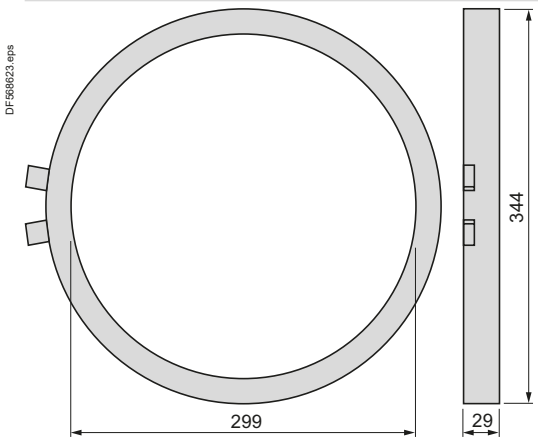

50485 and 50486

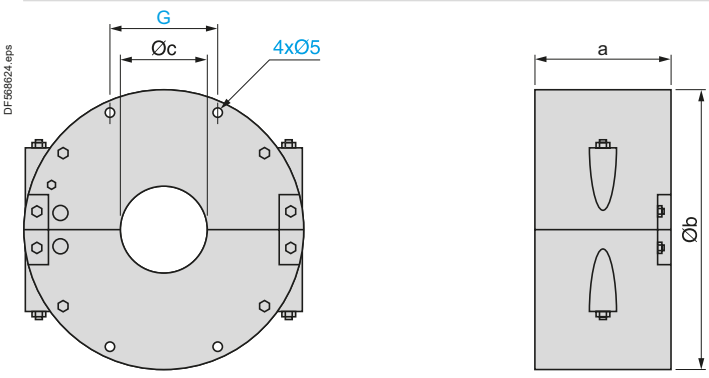

Type	a	Øb	Øc	G
50485	72	148	46	57
50486	78	224	110	76

References:
pages C1/4 to C1/11
Characteristics:
pages C1/22 to C1/36
Curves:
page C1/37
Schemes:
pages C1/40 to C1/43

Schemes

LTMR●●FM wiring with LTM9F filter

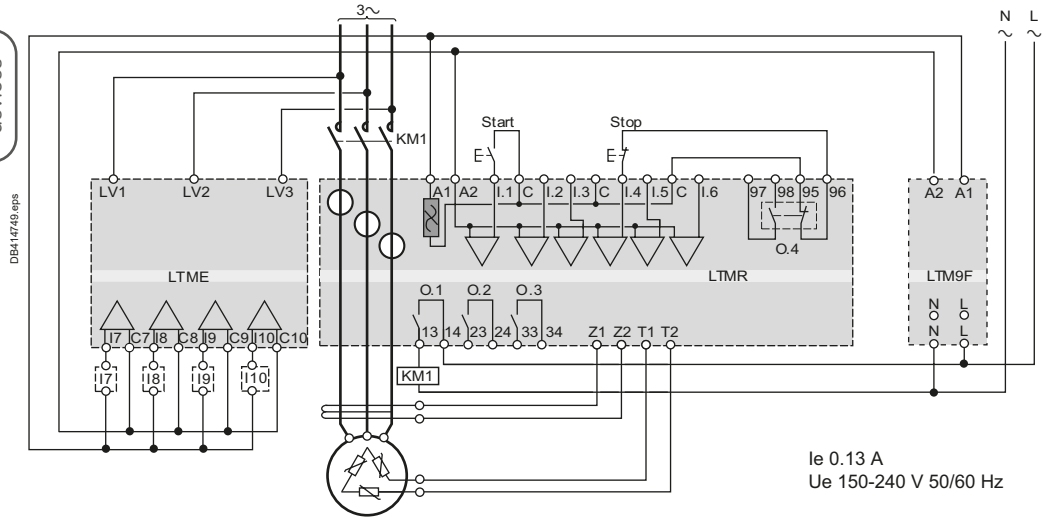

Note: *inputs MUST be connected across the common terminals (C).*

Overload mode

3-wire local-control

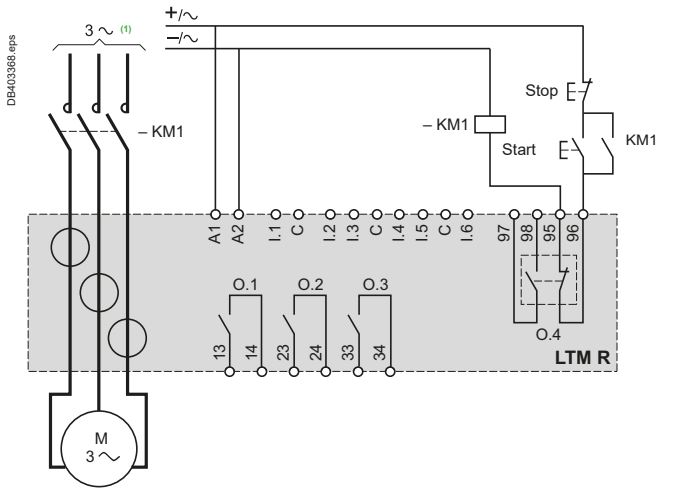

Independent mode

3-wire local-control

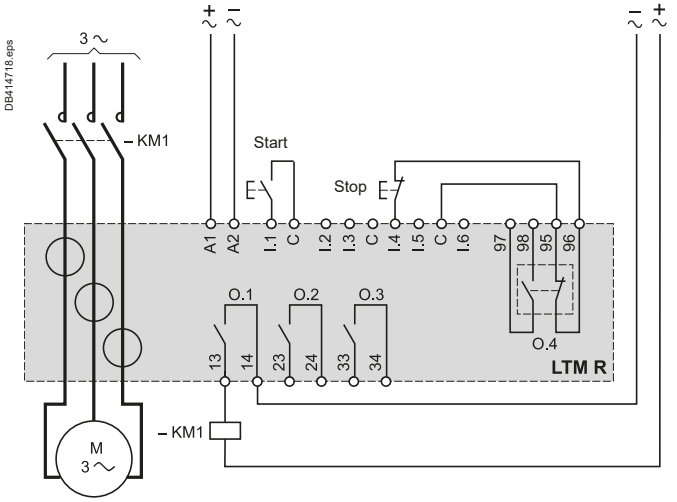

(1) Connection of a single-phase motor is possible. In this case, do not use the central current transformer.

2-wire local-control

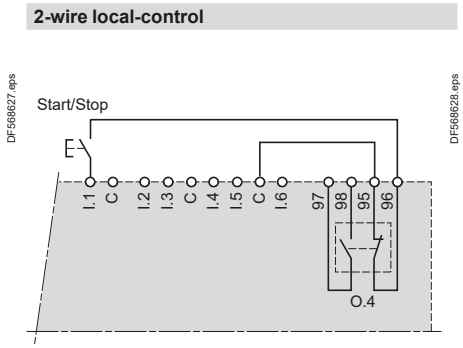

3-wire with switchable local/network control

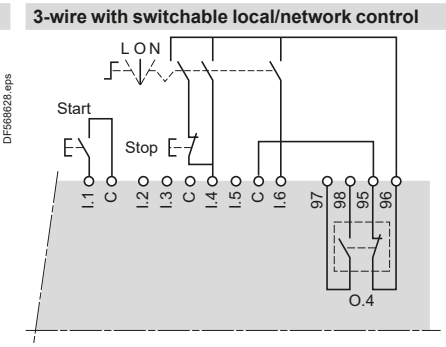

2-wire with switchable local/network control

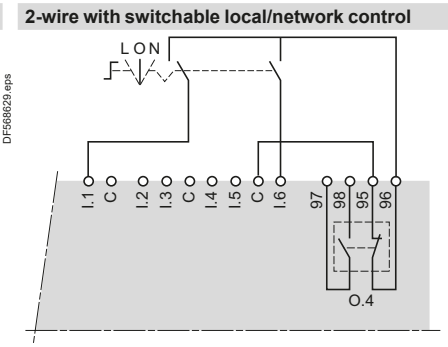

L: Local control
O: Stop
N: Network control

Schemes

Reverser mode

3-wire local-control

DB414719.eps

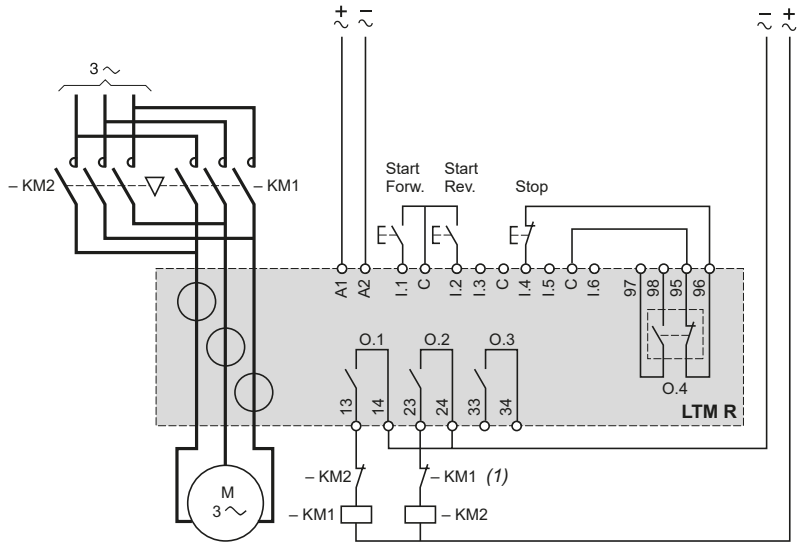

2-step mode, star-delta application

3-wire local-control

DB438600.eps

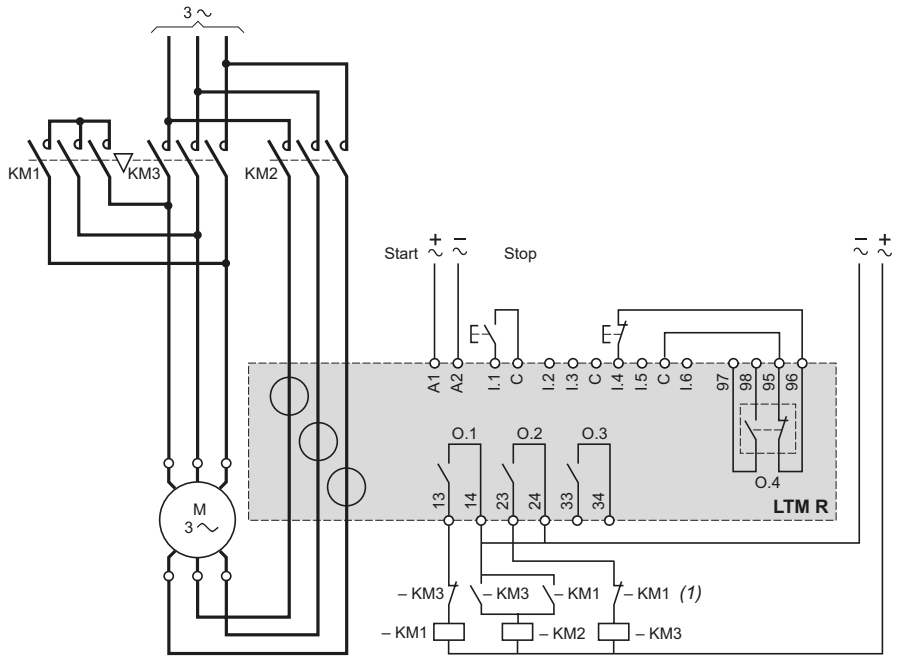

(1) Contacts for interlocking KM1 and KM2 are not obligatory because the controller electronically interlocks outputs O.1 and O.2.

References: pages C1/4 to C1/11
Characteristics: pages C1/22 to C1/36
Curves: page C1/37
Dimensions, mounting: pages C1/38 to C1/39

Schemes

2-step mode, primary resistor application

3-wire local-control

DB414721.eps

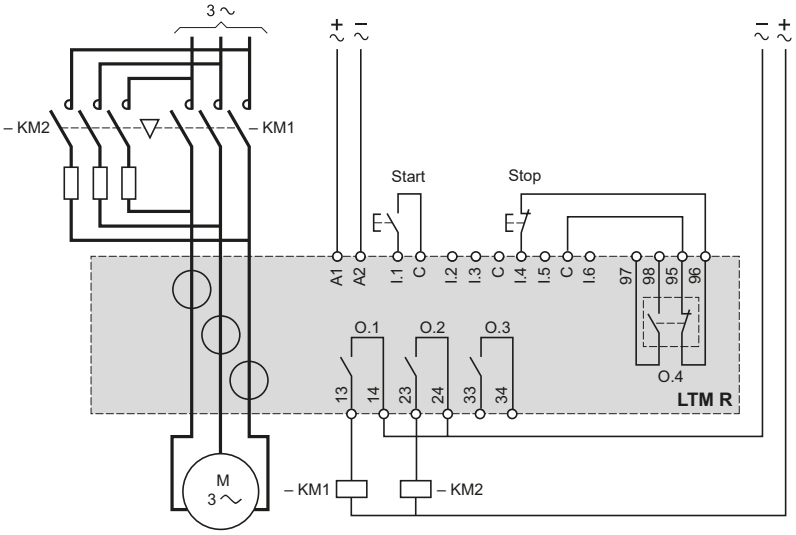

Ref.

2-speed mode, Dahlander application

3-wire local-control

DB418281.eps

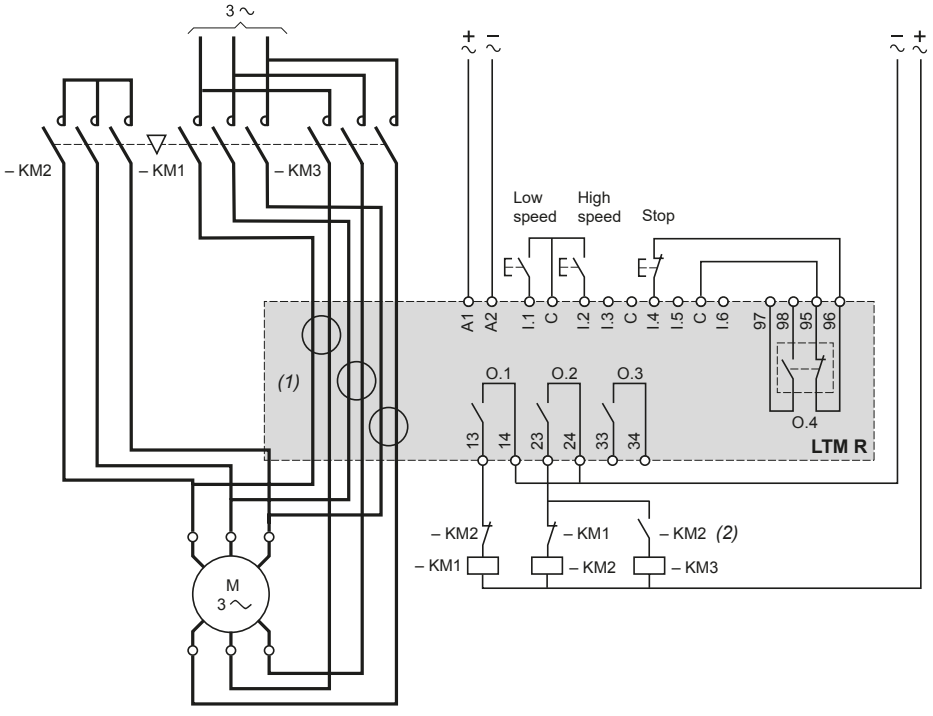

(1) For a Dahlander application, all the power cables must pass through current transformers. The controller can also be placed upstream of the contactor. In this case, and if the Dahlander motor is used in "variable torque" mode, all the cables downstream of the contactors must be of identical size.
(2) Contacts for interlocking KM1 and KM2 are not obligatory because the controller electronically interlocks outputs O.1 and O.2.

Schemes

Earth fault toroid and motor temperature probe connection

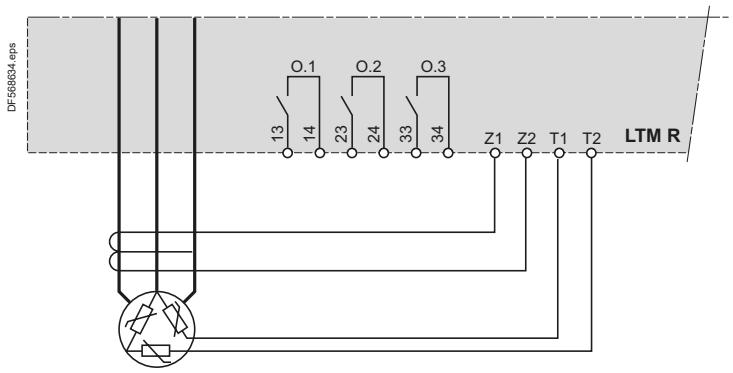

Connection of outputs for motor control mode function

Without intermediate relay

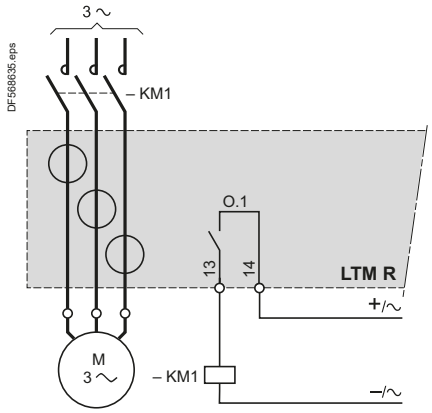

With intermediate relay

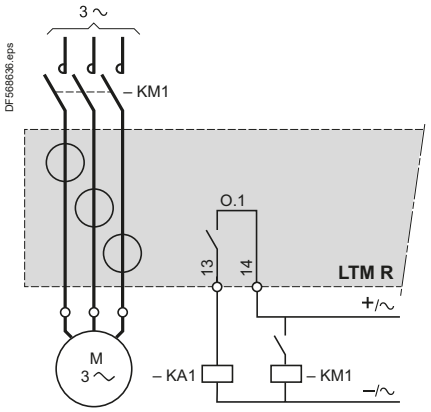

References:
pages C1/4 to C1/11

Characteristics:
pages C1/22 to C1/36

Curves:
page C1/37

Dimensions, mounting:
pages C1/38 to C1/39

TeSys Active
island Motor starters

TeSys island Motor starters

Type of information		Pages
Introduction Digital multifunctional load management solution		C2/2

Digital multifunctional load management solution

TeSys Active - island Motor starters are designed to switch, protect, and manage motors and other electrical loads up to 80 Amps (AC3) in an electrical control panel.



Dedicated to Control and Monitor Machine and Processes

TeSys island is a digital load management solution that makes machines and processes smarter and more reliable.

TeSys island is a fully digitized and object-oriented load management system and an Industry 4.0 compliant data provider.

It is reducing time to market and is enabling OEMs to move forward in their Industry 4.0 journey.

Benefits of the object-oriented functional approach

The **TeSys avatar** approach simplifies application and system configuration and reduces engineering tasks. Thus **TeSys island** makes the machine engineering and installation phase much faster.

In addition, **TeSys island** can be easily integrated into 3rd party automation systems and supports several fieldbuses like EtherNet/IP, Modbus TCP, PROFINET and PROFIBUS.

TeSys island gives users access to all relevant load data for advanced system diagnostics.



More information

- Watch videos, read documents and use the product selector online on Schneider Electric website.

TeSys island catalog:



> Ref. Document: LVCATISL_EN

TeSys island design guides:

> 8536IB1901: TeSys island System Guide
> 8536IB1902: TeSys island Installation Guide
> 8536IB1903: TeSys island Operating Guide
> 8536IB1904: TeSys island Functional Safety (Safe Stop according to EN 61800-5-2) Guide
> 8536IB1905: Third Party Function Block Guide and more.

Main characteristics

- **TeSys island** manages motors and other electrical loads up to 80 A (AC-3) / 37 kW/40 hp
- Fieldbus connectivity via bus coupler for EtherNet/IP, Modbus TCP, PROFINET or PROFIBUS
- Availability of all relevant load data like current, power, energy and advanced diagnostic data
- Simplified engineering and commissioning due to **TeSys avatar** objects and dedicated configuration and maintenance tools
- Up to 20 modules on 1 island mounted on DIN rail (up to 112 cm length)
- No control or auxiliary wiring required, thanks to full connectivity over fieldbus
- All adjustments and setting are digitized, no mechanical dials or dip switches
- Limited number of references including 5 starter sizes, digital & analog I/Os and voltage measurement modules
- SIL starter available for integration into functional safety systems according to IEC 61508, IEC 62061 and ISO 13849-1, including TUV certification (Stop 0 and 1 with wiring categories 1 to 2, suitable for PL c, d and SIL level 2), UKCA
- Fully complaint to international standards (IEC / UL / CSA 61010, IEC / UL / CSA 60947, GB/T14018)
- Embedded Cybersecurity (Achilles Level 2).

Modular architecture, thanks to **TeSys** Active - island Motor starters internal bus

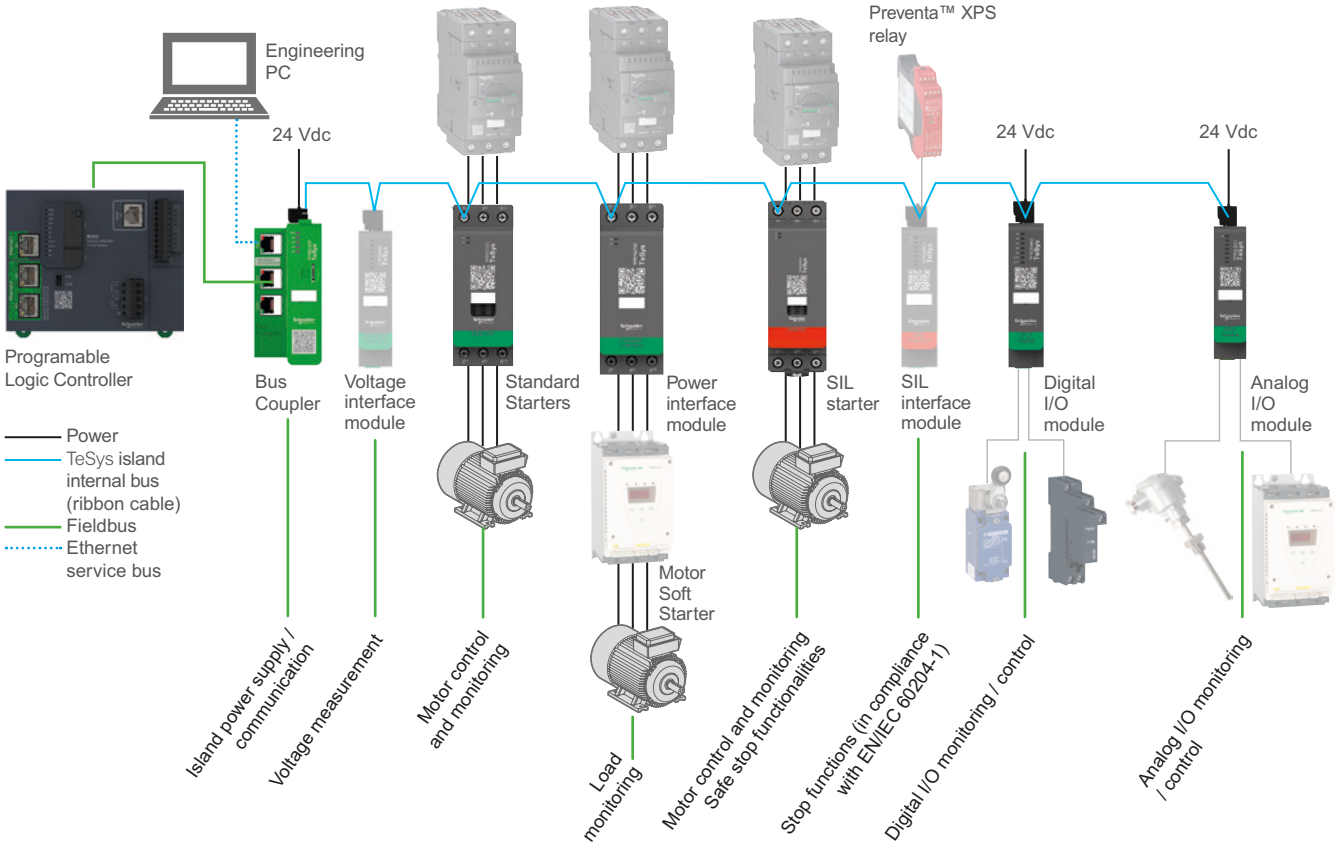

Control Panel Technical guides

> Discover our technical guides collection. They are dedicated to frequent issues faced when designing an installing a control panel.

> Free download on www.se.com with the document reference or from the QR codes.

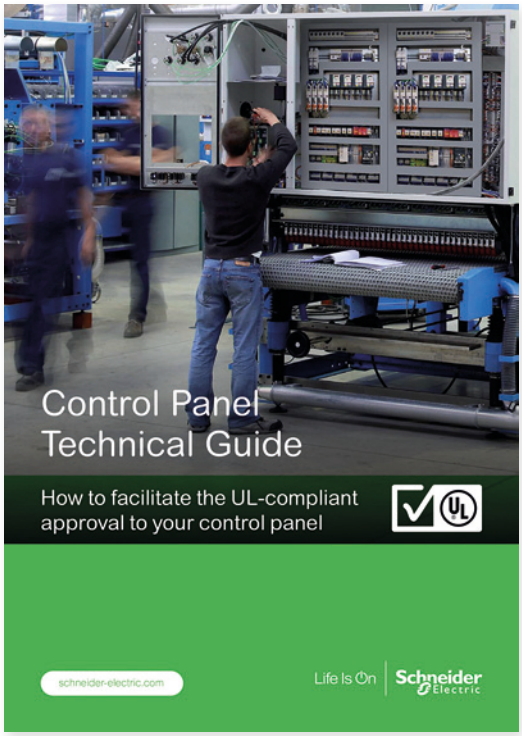

How to facilitate the UL-compliant approval to your control panel

> Ref: CPTG005_EN

> Click on QR code to download

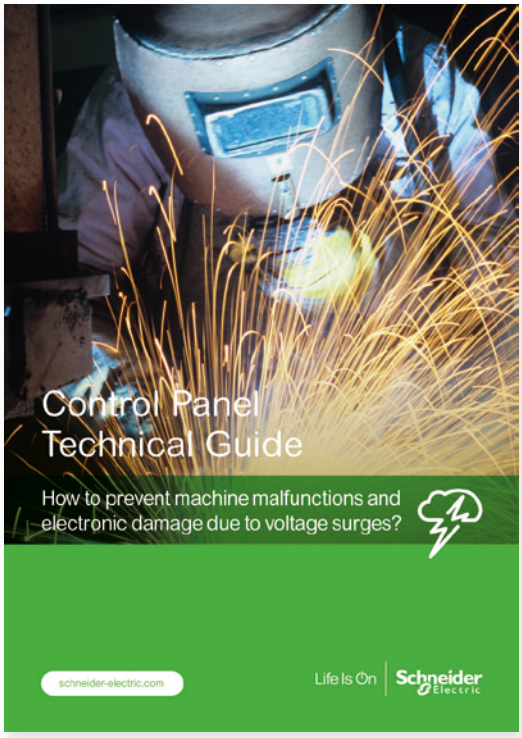

How to prevent machine malfunctions and electronic damage due to voltage surges

> Ref: CPTG002_EN

> Click on QR code to download

Control Panel Technical guides

> Discover our technical guides collection. They are dedicated to frequent issues faced when designing an installing a control panel.

> Free download on www.se.com with the document reference or from the QR codes.



How to protect a machine from malfunctions due to electromagnetic disturbance

> Ref: CPTG003_EN

> Click on QR code to download



How to reduce damage to components through effective thermal management

> Ref: CPTG001_EN

> Click on QR code to download

Control Panel Technical guides

> Discover our technical guides collection. They are dedicated to frequent issues faced when designing an installing a control panel.

> Free download on www.se.com with the document reference or from the QR codes.



How define the right outdoor solution and optimize its durability

> Ref: CPTG006_EN

> Click on QR code to download



How to protect electrical equipment from condensation

> Ref: UE12MK03EN

> Click on QR code to download

Control Panel Technical guides

> Discover our technical guides collection. They are dedicated to frequent issues faced when designing an installing a control panel.

> Free download on www.se.com with the document reference or from the QR codes.

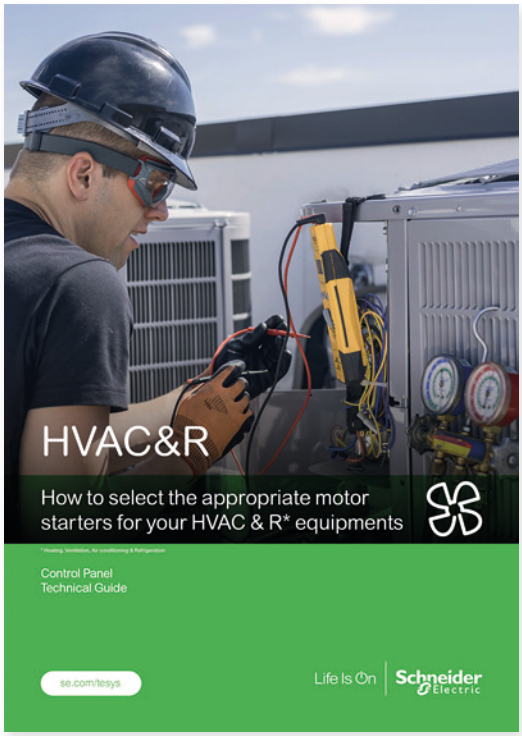

How to select the appropriate motor starters for your HVAC & R* equipments

* Heating, Ventilation, Air conditioning & Refrigeration

> Ref: CPTG007_EN

> Click on QR code to download

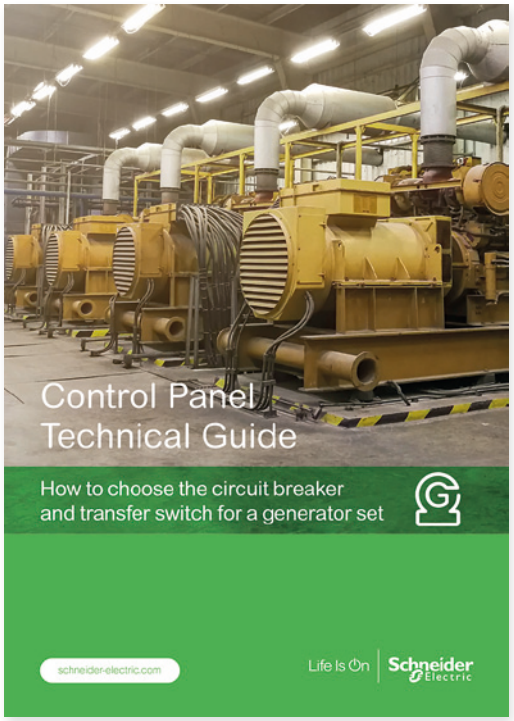

How to choose the circuit breaker and transfer switch for a generator set

> Ref: CPTG008_EN

> Click on QR code to download

Control Panel Technical guides

> Discover our technical guides collection. They are dedicated to frequent issues faced when designing an installing a control panel.

> Free download on www.se.com with the document reference or from the QR codes.

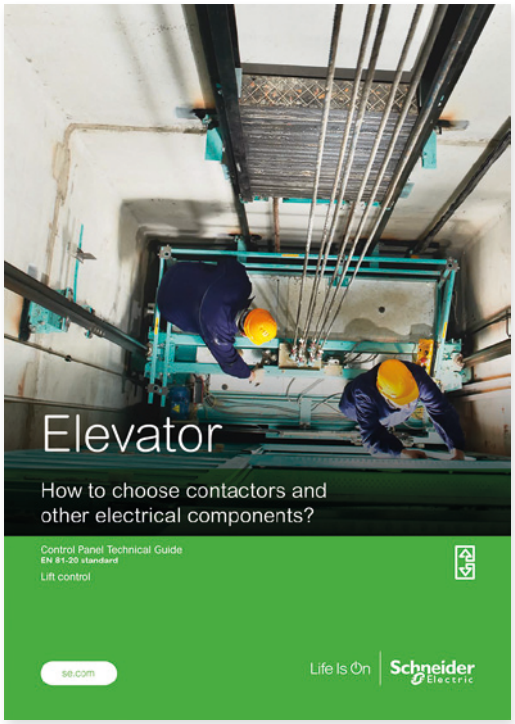

New edition 2020

Elevator
How to choose contactors and other electrical components

> Ref: CPTG009_EN

> Click on QR code to download

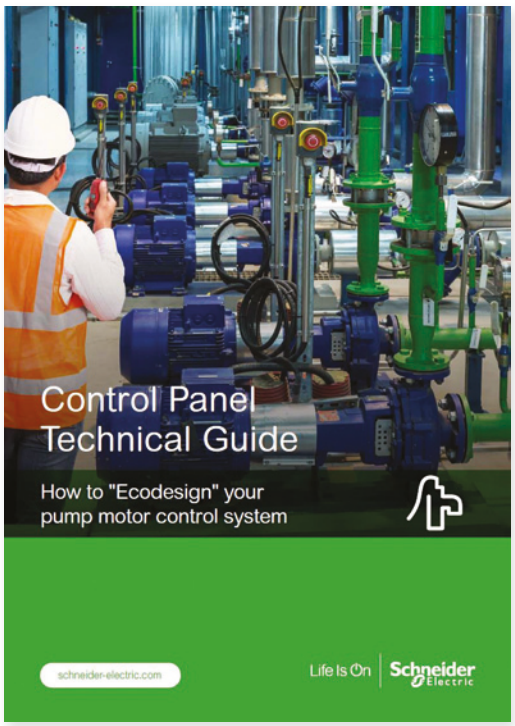

How to "Ecodesign" your pump motor control system

> Ref: CPTG010_EN

> Click on QR code to download

Control Panel Technical guides

> Discover our technical guides collection. They are dedicated to frequent issues faced when designing an installing a control panel.

> Free download on www.se.com with the document reference or from the QR codes.

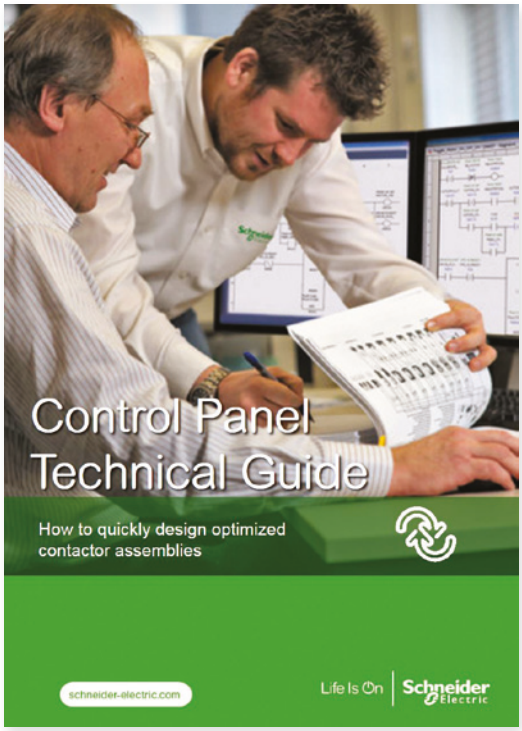

How to quickly design optimized contactor assemblies

> Ref: CPTG011_EN

> Click on QR code to download

Catalogues of contactors for specific applications

> For applications requiring components conforming to specific standards with increased severity.

> **TeSys** Switching
TeSys D, K S355 and S207 series contactors are built for these purpose, with new materials.



> **TeSys** Switching
TeSys D, K 'S355 series' (EN60335 standards)
Contactors for electrodomestic applications

> Ref: LVCATESDK335_EN

> Click on QR code to download.

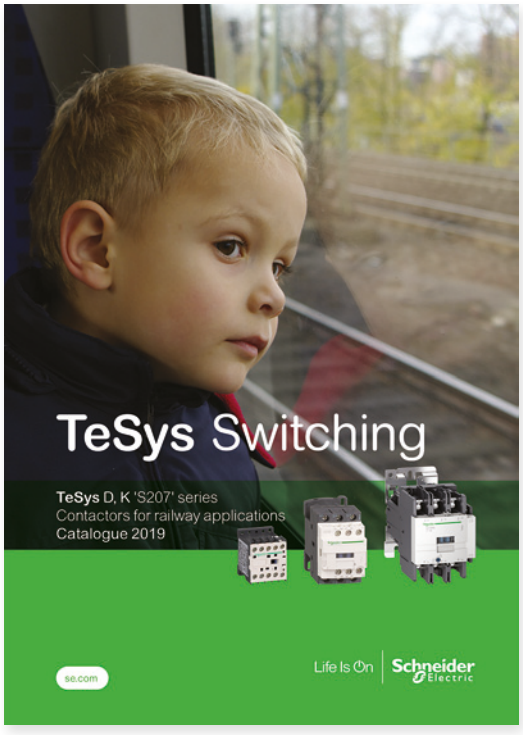

> **TeSys** Switching
TeSys D, K 'S207' series (EN45545 R22 HL3 standards)
Contactors for railways applications

> Ref: LVCATRAIL_EN

> Click on QR code to download.



Green Premium™

An industry leading portfolio of offers delivering sustainable value

Green Premium™

More than 75% of our product sales offer superior transparency on the material content, regulatory information and environmental impact of our products:

- RoHS compliance
- REACh substance information
- Industry leading # of PEP's*
- Circularity instructions

Discover what we mean by green
Check your products!

The Green Premium program stands for our commitment to deliver customer valued sustainable performance. It has been upgraded with recognized environmental claims and extended to cover all offers including Products, Services and Solutions.

CO_2 and P&L impact through… Resource Performance

Green Premium brings improved resource efficiency throughout an asset's lifecycle. This includes efficient use of energy and natural resources, along with the minimization of CO_2 emissions.

Cost of ownership optimization through… Circular Performance

We're helping our customers optimize the total cost of ownership of their assets. To do this, we provide IoT-enabled solutions, as well as upgrade, repair, retrofit, and remanufacture services.

Peace of mind through… Well-being Performance

Green Premium products are RoHS and REACh compliant. We're going beyond regulatory compliance with step-by-step substitution of certain materials and substances from our products.

Improved sales through… Differentiation

Green Premium delivers strong value propositions through third-party labels and services. By collaborating with third-party organizations we can support our customers in meeting their sustainability goals such as green building certifications.

*PEP: Product Environmental Profile (i.e. Environmental Product Declaration)

Life Is On | Schneider Electric

Schneider Electric SE

35, rue Joseph Monier
CS 30323
92506 Rueil Malmaison Cedex
France

RCS Nanterre 542 048 574
Capital social 2 268 274 220 €
www.se.com

June, 2022
ART834519

© 2022 - Schneider Electric. All Rights Reserved.
All trademarks are owned by Schneider Electric Industries SAS or its affiliated companies.
Document reference: MKTED210011EN

This document has been
printed on recycled paper